Development of an Advanced Combined Heat and Power (CHP) System Utilizing Off-Gas from Coke Calcination

Utilization of Process Off-Gas as a Fuel for Improved Energy Efficiency

Introduction

Coke calcination is a process that involves the heating of green petroleum coke in order to remove volatile material and purify the coke for further processing. Calcined coke is vital to the aluminum industry, where it is used to produce carbon anodes for aluminum production. Calcined coke is also widely used as recarburizer in the iron and steel industry. The increased use of crude oil (especially light sweet crude oil) over recent years has provoked escalated use of heavy, rather than light, crude oil for refinery process.

The resulting green coke produced from heavy crude oil processing has a higher sulfur content, which requires a significant increase in the calcination temperature and residence time. However, it is challenging to realize such a high-temperature calcination process.

This project developed an advanced CHP system utilizing the integrated by-product/waste heat (off-gas, bulk heat) from the innovative energy-efficient process of petroleum coke calcination in a fluidized bed.

Benefits for Our Industry and Our Nation

The development of this process, as compared to the conventional process using rotary kilns, is expected to yield significant energy, environmental, and economic benefits, including the following:

- Reduced fuel consumption of 25%–50% due to use of the opportunity fuel (off-gas from the industrial process)
- Enhanced specific production rates of 50%–100%
- Energy savings of 0.94 trillion Btu per year for a production unit of 100,000 metric tons per year due to integrated waste heat recovery (exhaust and bulk product)
- Lowered environmental impact resulting from improved combustion and reduced fuel consumption
- An approximately 60% reduction in capital and operating costs

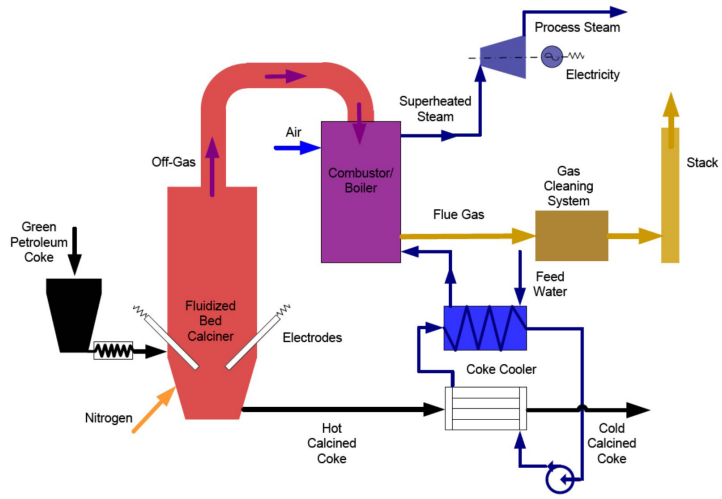

Flow chart of the petroleum coke calcining process in an electrothermal fluidized bed, integrated with waste heat utilization. The calcining process is composed of the petroleum coke charger (black), fluidized bed calciner with electrodes and nitrogen supply (red), and gas cleaning system (yellow-gold). The waste heat utilization system (or advanced CHP) is composed of the combustor/boiler (purple), coke cooler (blue), and generator (blue-violet). *Illustration courtesy of Gas Technology Institute (GTI).*

Applications in Our Nation's Industry

The project technology will have immediate applications in the growing industrial energy-intensive market of calcined coke production. The global calcined coke market is estimated at approximately 10 million tons and is growing by 800,000–1,000,000 tons of end product each year. The concept approach developed and validated during this project is expected to be successfully applied to cross-cutting markets such as steel production, power generation, and others.

Project Description

The goal of this project is to reduce the energy and carbon intensity of the calcined coke production process. This goal is realized through the increased utilization of solid product waste heat and opportunity fuels such as process waste off-gas. The project designed and demonstrated an advanced CHP system concept to best utilize the off-gases as opportunity fuels.

Barriers

- High level of combustion intensity to be handled by off-the-shelf gas-fired equipment
- Very high combustion process temperature (~ 2000°C)
- Presence of solid fines in off-gas can potentially induce deposition at the heat exchange surfaces during high-temperature combustion
- Low inlet pressure of the off-gas flow

Pathways

The project team has an extensive research and engineering background and long-standing practical experience in the area of industrial-fired equipment and processes. This background was necessary to efficiently overcome the potential project barriers by:

- Ensuring uniform mixing of the hot off-gas and combustion air with efficient combustion product recirculation
- Implementing a high circulating factor of two-phase (water-steam) flow in an integrated combustor-boiler arrangement
- Employing refractory-lined water-cooled combustion chamber walls for fouling mitigation and service life extension
- Applying a combustion air staging approach for nitrogen oxide (NOx) reduction

Milestones

- Appropriate scheme selected, based on configuration and concept design arrangement analysis
- Technical design completed, including set of fabrication drawings, supporting calculations, and field test agreement
- System assembled, and operating and safety precaution manuals are in place
- Pilot test completed, data processed, and test results analyzed

Accomplishments

- An advanced CHP system for petroleum coke calcination in an electrothermal fluidized bed was developed and theoretically evaluated.
- The conducted research and development efforts of the CHP system for the green petroleum coke calcining process have confirmed feasibility for predicted energy savings of the proposed technology.

Commercialization

After the successful development and demonstration of the proposed technology, project partners Gas Technology Institute (GTI) and Superior Graphite Co. (SGC), along with selected equipment manufacturers, are deploying the technology within SGC's facility in Hopkinsville, Kentucky. Furthermore, the project partners are marketing the technology to producers of calcined coke and related industries. GTI has a track record of more than 65 years in the successful commercialization of efficient combustion technologies for energy-intensive industrial applications. SGC is one of the leading companies in the area of high-temperature (up to 3000°C) electrothermal fluidized bed process technology, with over 30 years of practical experience in the development, design, and commercial operation of high-temperature electrothermal fluidized bed processes for deep desulfurization and purification of various types of raw and partially heat-treated carbonaceous materials such as natural/synthetic graphite, petroleum, and coke.

Project Partners

Gas Technology Institute (GTI)
Des Plaines, IL
Principal Investigator: Yaroslav Chudnovsky, Ph.D.
Email: yaroslav.chudnovsky@gastechnology.org

Superior Graphite Co. (SGC)
Chicago, IL

Schmidtsche Schack A Division of ARVOS Group
Wexford Business Unit
Wexford, PA

For additional information, please contact

Bob Gemmer
Technology Manager
U.S. Department of Energy
Advanced Manufacturing Office
Phone: (202) 586-5885
Email: Bob.Gemmer@ee.doe.gov ■

DOE/EE-0416 • Updated November 2014