# System-Level Evaluation of Closed Thermochemical Energy Storage for Space Heating

Kate Rivera, Masters Student, Oregon State University

IBUILD GRADUATE RESEARCH FELLOWSHIP

## Research Challenge

- Need high-density energy storage to account for:
  - The intermittent availability of renewable energy
  - The mismatch between renewable energy supply and consumer demand
- Thermochemical energy storage (TCES) uses reversible reactions between chemical pairs to store and release energy without incurring heat loss over storage duration
- Limited research on practical integration methods and operating limitations when applying TCES to buildings

## Current Research

- Perform parametric analyses on three TCES system configurations—two incorporating a vapor compression heat pump
- Compare coefficient of performance (COP), capacity, peak energy reduction, and operating limits of each configuration

## Major Impacts/Future Research

- Of the models analyzed, TCES topping a heat pump is the most promising for building applications.
- Lower COP in TCES systems is largely due to the condensation energy discarded to the ambient when charging.
- Future work will look at transient behavior and methods to recycle the heat of condensation.

| | Overall COP | $kWh_e$ consumed during peak | $kWh_e$ reduced during peak | Percent energy reduction |
|---|---|---|---|---|
| Heat pump (baseline) | 6.28 | 7.81 | — | — |
| Standalone TCES | 1.00 | 0 | 7.81 | 100% |
| TCES as bottoming cycle | 3.04 | 0.45 | 7.36 | 94.2% |
| TCES as topping cycle | 0.95 | 2.77 | 5.04 | 64.5% |

* Values are based on $SrBr_2 \cdot 6H_2O - 1H_2O$ reaction pair and the depicted operating scenario

**TCES Bottoming a Heat Pump**

**Charging Cycle**

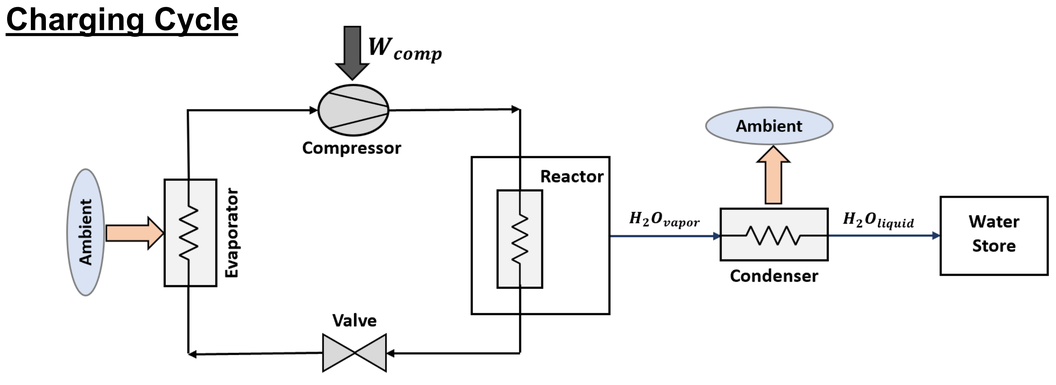


**Discharging Cycle**

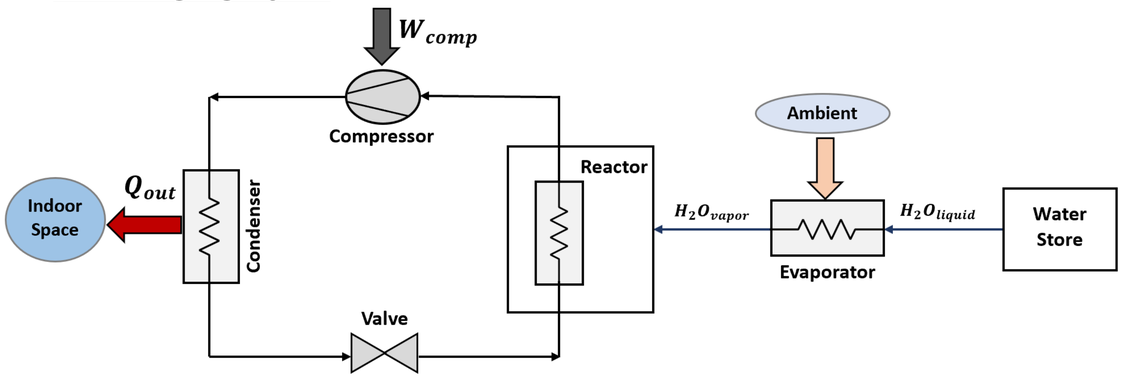


**TCES Topping a Heat Pump**

**Charging Cycle**

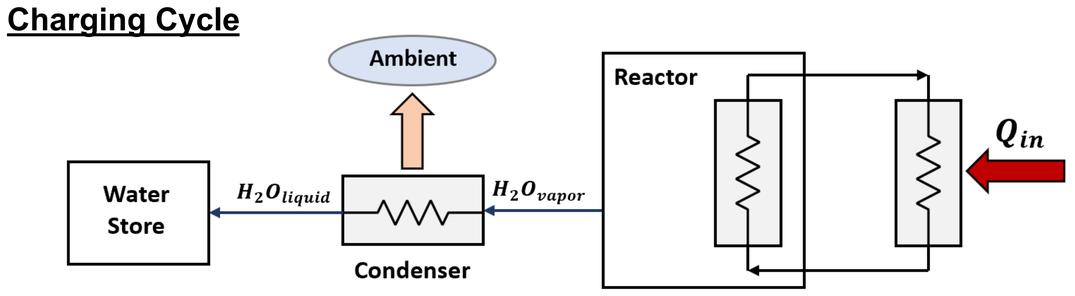


**Discharging Cycle**

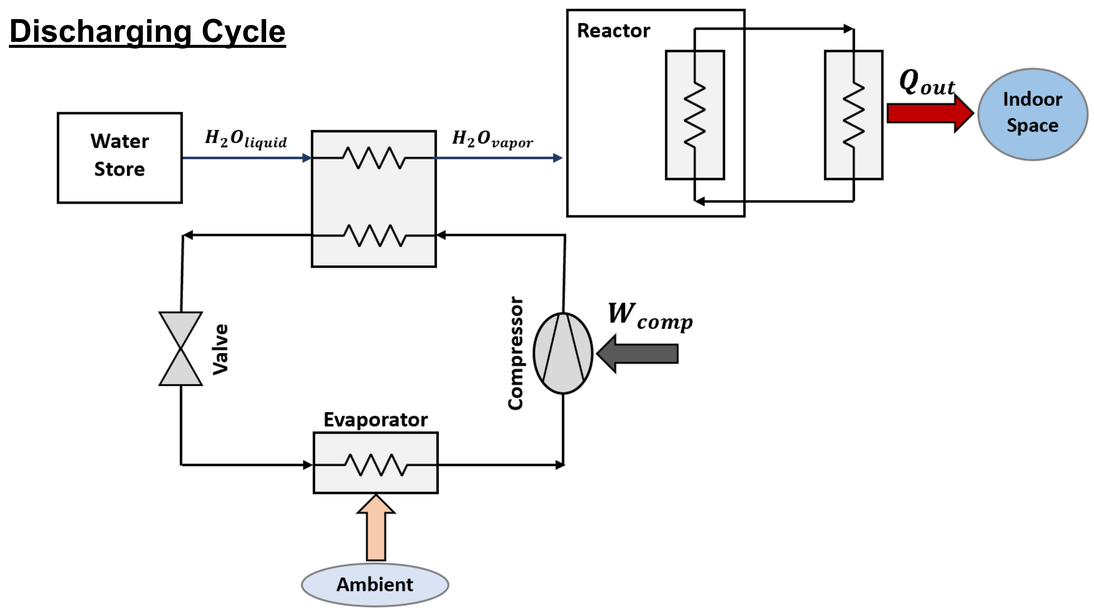


**Operating Scenario**

