Fact Sheet

U.S. DEPARTMENT OF ENERGY | Legacy Management

Slick Rock, Colorado, Disposal and Processing Sites

UMTRCA Title I sites

This fact sheet provides information about the **Slick Rock sites**. These sites are managed by the **U.S. Department of Energy Office of Legacy Management** under **Title I of the Uranium Mill Tailings Radiation Control Act of 1978**.

Site Information and History

The Slick Rock processing sites consist of two former uranium- and vanadium-ore processing facilities located in a remote area of southwest Colorado about 22 miles north of the town of Dove Creek in San Miguel County. These sites, referred to as Slick Rock East (formerly the North Continent site) and Slick Rock West (formerly the Union Carbide site), are located adjacent to the Dolores River. Slick Rock West is approximately 1 mile downstream (northwest) of Slick Rock East. Umetco Minerals Company owns both sites.

The Shattuck Chemical Company constructed the Slick Rock East mill in 1931. In 1934, North Continent Mines, Inc., acquired the facility. The mill was designed to extract radium salts and vanadium from locally mined ores. In 1945, the federal government acquired control of the facility through the Union Mines Development Corporation to supply uranium for the Manhattan Project. Union Carbide Corporation became the owner of the facility in 1957, and the mill closed in the early 1960s. The milling operations created radioactive tailings, a predominantly sandy material. In 1995, about 129,000 cubic yards of tailings and other contaminated materials were relocated to the Slick Rock disposal site, formerly known as the Burro Canyon disposal site, about 5 miles east of the processing sites.

Union Carbide's mill at Slick Rock West began operation in 1957 using a uranium-vanadium upgrading technique to process ore mined from the surrounding area. The upgraded material was shipped to the Union Carbide mill at Rifle, Colorado, for further processing. The Slick Rock West mill closed in 1961. Milling operations at the at the Slick Rock West mill also created radioactive tailings. In 1995, about 671,000 cubic yards of these contaminated materials were relocated to the Slick Rock disposal site.

The U.S. Department of Energy (DOE) began surface remediation at both Slick Rock processing sites in 1995 and completed cleanup in 1996. Both sites have been recontoured and seeded with native grasses.

Regulatory Setting

Congress passed the Uranium Mill Tailings Radiation Control Act (UMTRCA) in 1978 (Public Law 95-604), and DOE remediated 22 inactive uranium-ore processing sites under the Uranium Mill Tailings Remedial Action Project in accordance with standards promulgated by the U.S. Environmental Protection Agency in Title 40 *Code of Federal Regulations* (CFR), Part 192. Subpart B of 40 CFR 192 regulated cleanup of contaminated groundwater at the processing sites.

The radioactive materials were encapsulated in U.S. Nuclear Regulatory Commission (NRC)-approved disposal cells. The NRC general license for UMTRCA Title I sites is established in 10 CFR 40.27. The Slick Rock disposal site was included under the general license in 1998.

Processing Site

At both Slick Rock processing sites, groundwater in the Dolores River alluvium constitutes the uppermost aquifer. The Jurassic Wanakah and Morrison Formations underlie the river alluvium at the Slick Rock East site. These formations form an aquitard that inhibits downward migration of alluvial groundwater. The Jurassic Entrada and Navajo Sandstone Formations underlie river alluvium at the Slick Rock West site. Hydrologic data indicate there is a slight upward vertical gradient between the alluvial and Entrada aquifers.

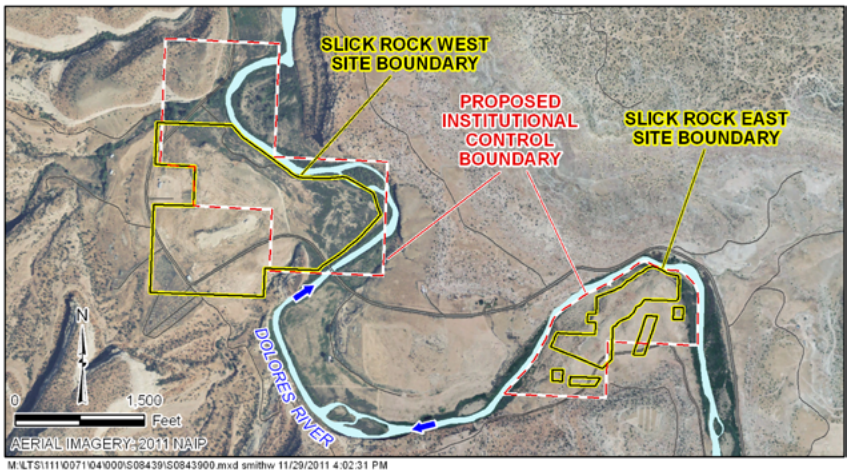

Proposed Institutional Control Boundaries at the Slick Rock Processing Sites.

This condition inhibits groundwater flowing vertically from the alluvial aquifer down into the underlying Entrada.

Historical milling operations at both sites have created contamination in alluvial groundwater. Selenium and uranium are the main contaminants in groundwater at the Slick Rock East site. At Slick Rock West, benzene, manganese, molybdenum, nitrate, radium-226, radium-228, selenium, toluene, and uranium are the main contaminants.

Past milling operations have had no detectable effect on water quality of the Dolores River.

Compliance Strategy

DOE's groundwater compliance strategy for both Slick Rock processing sites is natural flushing in conjunction with institutional controls and continued monitoring. The strategy for the Slick Rock West site also includes an alternate concentration limit for selenium. An alternate concentration limit may be adopted within specified areas when an established maximum concentration limit is unattainable or when no drinking water standard exists. However, the alternate concentration limit must not pose a present or potential future hazard to human health or the environment.

To date, NRC has not concurred with DOE on the proposed groundwater compliance strategy. Until we receive concurrence, LM will continue to monitor annually and provide the results every two years in a Verification Monitoring Report.

Institutional Control

Separate institutional controls are being developed for the Slick Rock East and Slick Rock West processing sites to prevent use of groundwater during the natural flushing period. The proposed institutional control for each processing site consists of a State of Colorado environmental covenant to cover the portion of the properties affected by contaminated groundwater. The proposed covenant restricts drilling or pumping groundwater for as long as any residual contamination remains above respective clean-up levels.

Disposal Site

Land surrounding the disposal site is managed by the U.S. Bureau of Land Management and is used predominantly for grazing; the region is sparsely populated. The disposal site is situated above the Dolores River floodplain on a broad, relatively flat bench. The disposal cell was excavated into the sandstone and shale of the Burro Canyon Formation and Dakota Sandstone. These strata crop out northeast of and downdip from the site. Local groundwater in the Burro Canyon Formation is classified as limited use because of low yield.

Disposal Cell Design

The Slick Rock disposal cell measures 630 feet by 900 feet at the base and occupies an area of 12 acres on the 62-acre site. The cell was excavated 7 to 20 feet below ground surface so that the bottom of the contaminated materials would be

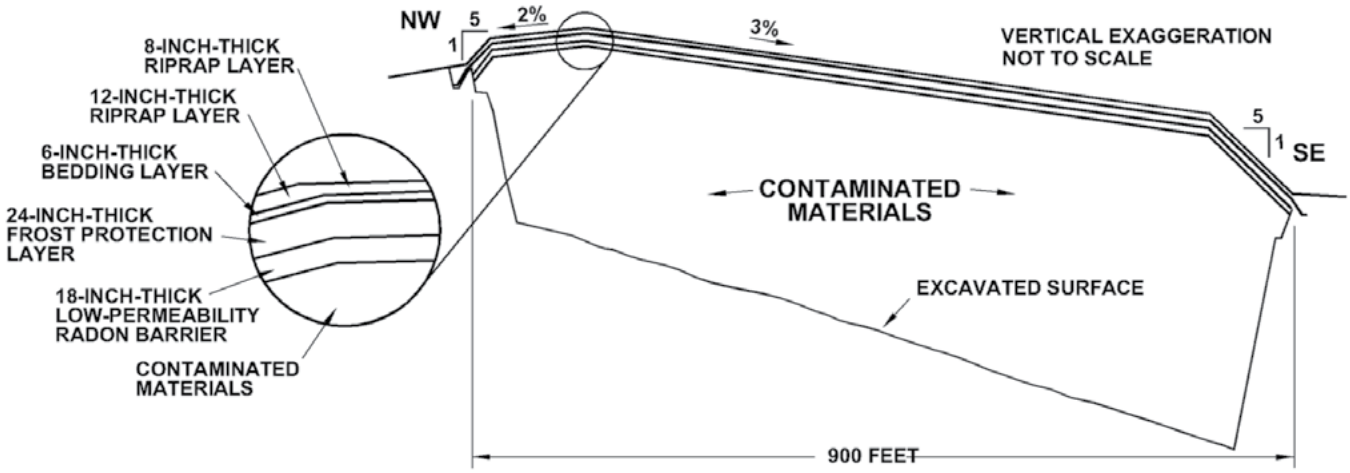

Northwest-Southeast Cross Section of the Slick Rock Disposal Cell.

placed below a permeable sandstone layer of the Dakota Sandstone Formation that is exposed in the excavation wall. The disposal cell contains 1.11 million dry tons (about 800,000 cubic yards) of contaminated materials with a total activity of 149 curies of radium-226.

The top of the cell is at ground surface at the northwest corner and rises 50 feet above the surrounding land on the other sides. Material from the cell excavation was stockpiled west of the cell, contoured, and revegetated. A four-strand wire fence surrounds the cell, and the site perimeter is marked with warning signs along with survey and boundary monuments.

The cover of the disposal cell is a multicomponent system designed to encapsulate and protect the contaminated materials. The disposal cell cover is composed of (1) a low-permeability radon barrier (first layer placed over compacted tailings) consisting of clayey soil, (2) a frost protection layer of compacted soil, (3) a bedding layer of sand and gravel placed as a capillary break, and (4) a rock (riprap) erosion-protection layer.

A riprap apron surrounding the perimeter of the disposal cell provides erosion protection at the toe of the cell and channels runoff away from the cell. Disturbed areas surrounding the site were regraded and seeded with native grasses.

Legacy Management Activities

The DOE Office of Legacy Management (LM) manages the disposal site according to a site-specific Long-Term Surveillance Plan to ensure that the disposal cell systems continue to prevent release of contaminants to the environment. Under provisions of this plan, LM conducts annual inspections of the site to evaluate the condition of surface features and performs site maintenance as necessary.

In accordance with 40 CFR 192.02(a), the disposal cell is designed to be effective for 1,000 years, to the extent reasonably achievable, and, in any case, for at least 200 years. However, the general license has no expiration date, and LM's responsibility for the safety and integrity of the Slick Rock disposal cell will last indefinitely.

CONTACT INFORMATION

IN CASE OF AN EMERGENCY AT THE SITE, CONTACT 911

LM TOLL-FREE EMERGENCY HOTLINE: (877) 695-5322

Site-specific documents related to the **Slick Rock, Colorado, Disposal and Processing Sites** are available on the LM website at **www.energy.gov/lm/slick-rock-colorado-disposal-and-processing-sites**

For more information about LM activities at the **Slick Rock, Colorado, Disposal and Processing Sites**, contact:

U.S. Department of Energy
Office of Legacy Management
2597 Legacy Way
Grand Junction, CO 81503

Email:
public.affairs@lm.doe.gov

DOE Office of Legacy Management
(970) 248-6070

www.energy.gov/lm

www.facebook.com/OfficeofLegacyManagement

www.linkedin.com/showcase/office-of-legacy-management

08/2023