BUILDING TECHNOLOGIES OFFICE PEER REVIEW DETAILED TECHNICAL AGENDA

APRIL 24 – 28, 2023

ARLINGTON, VA

DOUBLETREE CRYSTAL CITY

U.S. DEPARTMENT OF ENERGY | Energy Efficiency & Renewable Energy

BUILDING TECHNOLOGIES OFFICE

2023 PROJECT PEER REVIEW

U.S. DEPARTMENT OF ENERGY
BUILDING TECHNOLOGIES OFFICE

WELCOME

Dear Friends and Colleagues,

Welcome to the 2023 Building Technologies Office (BTO) Peer Review. This is the first in-person BTO Peer Review since 2019, and I am excited to meet all of you face-to-face to facilitate networking and collaboration toward innovative solutions that save energy, money, and our environment.

Today's U.S. building stock consists of 130 million commercial and residential buildings. Collectively, they are responsible for 35% of U.S. greenhouse gas emissions, consume about 75% of U.S. electricity, and cost American households and businesses over $500 billion annually in energy bills. However, an estimated one-third of annual building energy use is wasted. Addressing current economic, energy, environmental, and equity challenges will require buildings to play an outsized role in economy-wide decarbonization. To that end, BTO research, development & demonstration (RD&D) efforts fund opportunities in building materials, construction methods, HVAC&R technologies, building energy codes, smart devices and controls, electric vehicles, building-grid integrations, and more to develop and deploy technologies and systems that equitably lower costs, reduce carbon emissions, and improve building efficiency while ensuring occupant health and comfort.

BTO focuses on development, demonstration, and acceleration of cost-effective technologies, techniques, tools, and services adoption toward an equitable transition to a decarbonized energy system. As part of this effort, BTO relies on the Peer Review to collect rigorous, independent assessments of projects in BTO's research portfolios to ensure they remain relevant, effective, and aligned with DOE's priorities while being good stewards of taxpayer funds. Moreover, this Review is a unique opportunity for external stakeholders to learn about BTO's projects and provide recommendations, helping to inform its strategic decision making including future budgets, funding opportunities, scope, focus, and direction.

This year, I welcome everyone to attend the 2023 BTO Peer Review and learn about BTO's exciting research projects and join the sessions and discussions we have planned with top experts in building technologies and related fields. We will also showcase a range of BTO's key initiatives through special sessions on topics including BTO's Strategy, Healthy Buildings, Connected Communities, Technology-to-Market, Building America, Advanced Building Construction, Building Energy Codes, Energy Equity and Environmental Justice, and more (see pages 6-7 for a full list of special sessions).

The diverse perspectives and input you bring are vital to achieving BTO's objectives through contribution of ideas that drive continued innovation. I look forward to hearing from you about your successes and challenges, and hope that we find new opportunities and breakthroughs to positively transform the building-energy landscape.

Sincerely,

Ramachandran Narayanamurthy
Deputy Director, Building Technologies Office
Office of Energy Efficiency and Renewable Energy
U.S. Department of Energy

2023 PROJECT PEER REVIEW

U.S. DEPARTMENT OF ENERGY
BUILDING TECHNOLOGIES OFFICE

Technical Agenda

I. LEADERSHIP 4

II. EVENT SPACE 7

III. SPECIAL SESSIONS 8

BTO Strategy and Roadmap 8
Healthy Buildings Showcase 8
Generating Decarbonization Impact Through the JUMP into STEM Student Competition 8
Incubating Market-Propelled Entrepreneurial Mindset at the Labs and Beyond (IMPEL) 8
Connected Communities 9
Building America 9
FAST-DERMS (Controls and Grid Integration) 9
Building Energy Codes 9
Advanced Building Construction (ABC) 10
Energy Equity & Environmental Justice/Diversity, Equity, and Inclusion (EEEJ/DEI) 10
Building Performance Standards (BPS) 10
National Emerging Technologies Collaborative (NETC) (by invitation only) 10

IV. AT-A-GLANCE (TABLE) 11

III. AT-A-GLANCE (LIST) 14

IV. FULL AGENDA 17

Monday, April 24 17
Tuesday, April 25 20
Wednesday, April 26 26
Thursday, April 27 32
Friday, April 28 36

V. POSTER HALL LAYOUT 37

VI. POSTERS (FULL LIST) 38

This is the technical agenda for the 2023 Peer Review of the Building Technologies Office (**BTO**) in the Office of Energy Efficiency and Renewable Energy (**EERE**) at the U.S. Department of Energy (**DOE**).

Please be aware that the scheduled times, room assignments, and speakers/presenters are subject to change.

I. Leadership

Ram Narayanamurthy, Deputy Director

Ram Narayanamurthy oversees BTO's activities and joined DOE in 2022 with over two decades of experience in development and deployment of building technologies. Prior to DOE, Ram led the Buildings Program at the Electric Power Research Institute (EPRI) where his team focused on decarbonization strategies for both existing buildings and new construction based on large-scale deployments, including the first production-built zero-energy community, decarbonized solutions for retrofits in affordable housing communities, and smart energy communities.

Ram has also extensively worked with state organizations (e.g., the California Energy Commission, New York State Energy Research and Development Authority), cities, large homebuilders, affordable housing developers, HVAC manufacturers, and utilities to scale emerging technologies and to advance building decarbonization.

Prior to EPRI, Ram led teams focused on innovation and product development. As Director of Product Development at Ice Energy, his work led to the development of the Ice Bear, one of the first packaged thermal energy storage systems for light commercial buildings, which won ASHRAE's product of the year in 2005 and 2010. As Chief Science Officer for EchoFirst, Ram worked on integrated home energy management systems, solar PV, and solar thermal technologies, including some of the first smart thermostats and integrated ventilation and HVAC strategies to reduce building energy use.

Ram holds a master's degree in Mechanical Engineering from the Pennsylvania State University and a bachelor's degree in Mechanical Engineering from the Indian Institute of Technology. He holds 27 patents across a breadth of building technologies, including HVAC, water heating, solar, and controls technologies.

John Cymbalsky, Program Manager, Appliance and Equipment Standards

John Cymbalsky leads a team responsible for developing Federal energy conservation standards and test procedures as well as providing technical support for the development of ENERGY STAR product test procedures and verification testing. Prior to taking this position in 2010, Mr. Cymbalsky worked at the Energy Information Administration for over 20 years. He was responsible for developing the National Energy Modeling System's (NEMS) Residential Energy Demand Module. John has participated in and authored many studies related to energy efficiency and various policies impacting residential sector energy use.

John holds a bachelor's degree in Economics and Statistics from the State University of New York at Buffalo and completed graduate coursework in Economics at George Mason University.

Hayes Jones, Program Manager, Commercial Buildings Integration

Hayes Jones leads BTO's Commercial Building Integration (CBI) Program, which works to increase the adoption of energy-efficient technologies and practices in commercial buildings, serving as a market stimulation and market feedback link between BTO's Emerging Technologies, Building Energy Codes, and Appliance Standards Programs. CBI demonstrates and deploys replicable solutions through testing, demonstration, and deployment of turnkey energy-efficiency and climate-responsive technology packages, scaled in partnership with community-level organizations.

Before joining BTO, Hayes served as the program manager for Resilience, Security and Agency Engagement in DOE's Federal Energy Management Program (FEMP) where she led a team developing resources for security of facility-related control systems. She helped develop a systematic approach to agency and site resilience planning that helps organizations assess current infrastructure against risk and prioritize solutions for implementation.

Hayes has been with DOE for 13 years, serving in various roles in FEMP in operations, budget, and communications. She holds a master's degree in environmental management and a bachelor's degree from Duke University.

Sven Mumme, Program Manager (Acting), Emerging Technologies

Sven Mumme leads BTO's Emerging Technologies (ET) Program and is a technology manager for Opaque Envelope and Thermal Energy Storage R&D. He plays an integral role in the Advanced Building Construction (ABC) Initiative and the Small Business Innovation Research (SBIR) program while also contributing to BTO's Technology-to-Market Initiative.

Sven joined DOE in 2012 as an ARPA-E technology-to-market advisor, where he helped transition breakthrough energy technologies from lab to market. He was responsible for leading the commercialization strategy for the Methane Opportunities for Vehicular Energy program and a variety of building energy efficiency, energy storage, and gas-to-liquids projects from the OPEN 2012 and OPEN 2015 programs.

Prior to joining DOE, Sven worked for the specialty chemicals and materials company W.R. Grace as a global marketing manager for incubator technologies where he developed high-risk, high-reward businesses in energy storage, alternative feedstock conversion, and drug delivery. Sven also led its new product development stage-gate process to advance step-out technologies to market. From 1999 to 2005, Sven was a project engineer at Underwriters Laboratories (UL), where he designed laboratory systems and equipment for UL's test facilities across Asia, Europe, and North America.

Sven earned a bachelor's degree in Mechanical Engineering from Queen's University in Kingston, Ontario, and an MBA from Duke University's Fuqua School of Business.

Amy Royden-Bloom, J.D. Program Manager, Residential Buildings Integration

Amy Royden-Bloom leads BTO's Residential Building Integration (RBI) Program, which includes research, analysis, information, and partnerships geared toward developing and scaling energy-efficiency technologies and approaches that improve the affordability and comfort of residential buildings while reducing their carbon footprint and energy consumption.

Before joining BTO in 2022, Amy worked in DOE's Weatherization Assistance Program for nine years managing its State Energy Program, which provides funding and technical assistance to states, territories, and the District of Columbia to enhance energy security, advance state-led energy initiatives, and maximize the benefits of increasing energy affordability. Amy also has experience in implementing the Clean Air Act from her position as senior staff associate at the National Association of Clean Air Agencies.

Amy holds a law degree from Harvard Law School and a bachelor's degree in Economics and Spanish from the University of Virginia.

Jeremy Williams, Program Manager (Acting), Building Energy Codes

Jeremy Williams oversees BTO's activities supporting advanced energy efficiency and decarbonization through Building Energy Codes, which establish standards for energy use and environmental performance in residential and commercial buildings.

Since 2011, Jeremy has represented DOE in its building code research, development, and analysis activities, including participation in the International Energy Conservation Code (IECC) and Standard 90.1. He is a member of the IECC Residential and Commercial Energy Committees as well as the Standard 90.1 and National Green Building Standard technical committees. Jeremy also oversees DOE's code technical analysis and assistance work, which supports states and local governments in successfully implementing their codes. He has a particular interest in energy code compliance and validating the impacts of codes in the field, and ensuring their benefits are realized by U.S. homes and businesses.

Jeremy holds a master's degree in Construction Management from Michigan State University and a bachelor's degree in Business and Education. Jeremy is also a college adjunct instructor teaching courses in construction management, and a former high school chemistry and physics teacher.

II. Event space

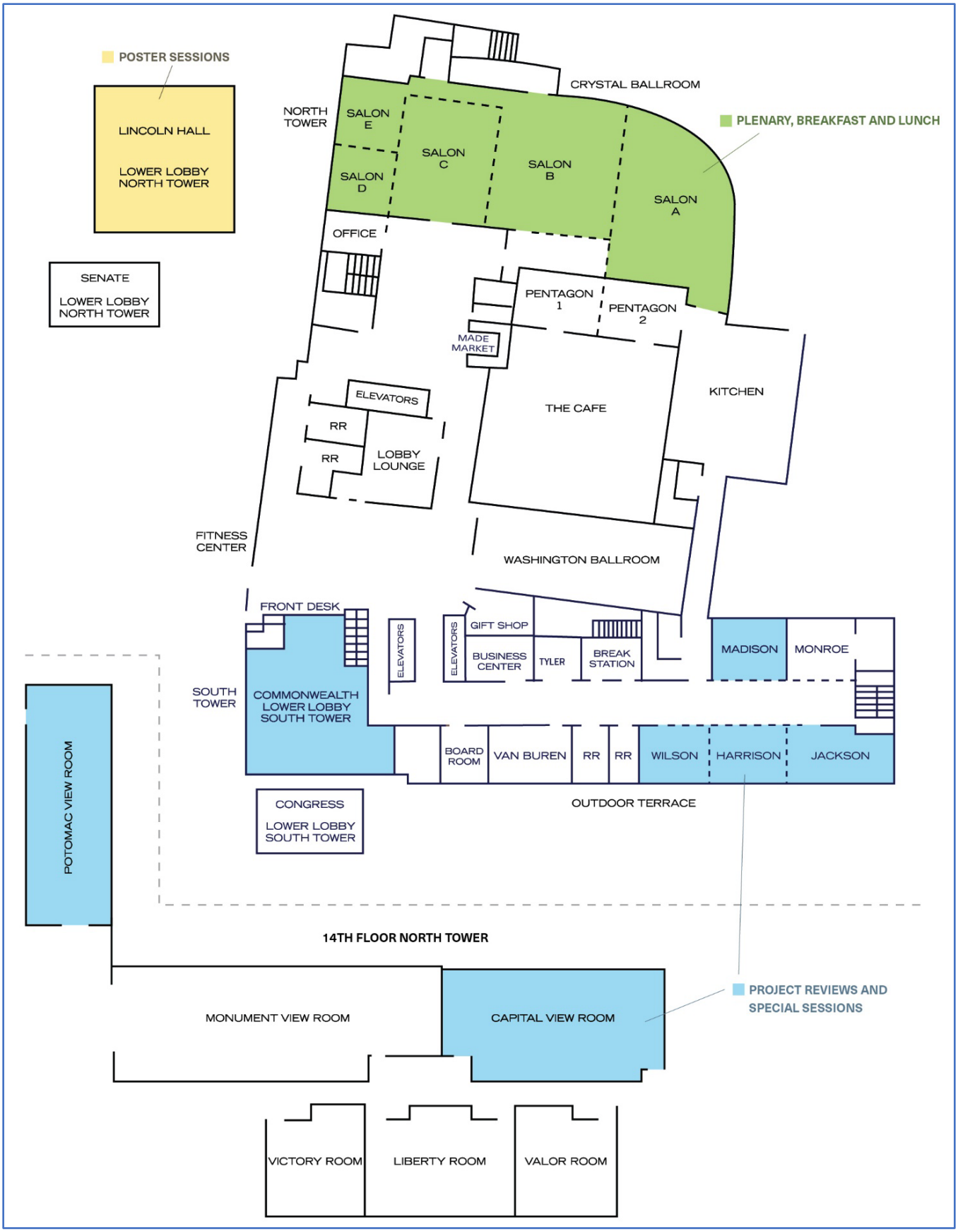

III. Special sessions

This year's Peer Review will feature the following sessions to showcase key BTO efforts and to facilitate direct engagement between BTO and stakeholders:

BTO Strategy and Roadmap

9:00 AM – 1:00 PM, Monday, April 24. WILSON/HARRISON Rm. ***Organized by Jared Langevin, Eric Wilson, and Rebecca Ciraulo***

The Deputy Director of BTO, Ramachandran Narayanamurthy, will share the Office's strategy, goals, and vision for national building decarbonization. We will hear from a panel of representatives from various states on their building decarbonization plans. Then, Rebecca Ciraulo, the Director in Energy, Sustainability & Infrastructure at Guidehouse Consulting and Services, will facilitate a discussion to gather audience feedback on BTO strategy. The session will close with a presentation on EERE-wide, cross-sectoral DECARB analysis and how BTO is leveraging DECARB to address key questions about building decarbonization.

Healthy Buildings Showcase

11:30 AM – 1:00 PM, Monday, April 24. MADISON Rm. ***Organized by Wyatt Merrill, Samuel Petty, and Eric Werling***

This session will showcase work across the BTO subprograms of Residential Building Integration, Commercial Building Integration, and Emerging Technologies in improving occupant health and wellbeing in residential and commercial environments. Featured speakers will offer historical context and a preview of new efforts in indoor air quality, pandemic response, and occupant health. A moderated discussion with panelists from the national laboratories (Lawrence Berkeley, Pacific Northwest) and the White House Office of Science and Technology Policy.

Generating Decarbonization Impact Through the JUMP into STEM Student Competition

10:15 AM – 11:15 AM, Tuesday, April 25. MADISON Rm. ***Organized by Nicholas Ryan***

Drs. Yeonjin Bae and Kim Trenbath will present an overview of JUMP into STEM, a BTO-funded online building science competition that brings together a diverse body of students, professors, and stakeholders from industry, DOE, and the National Laboratories. Participating students ideate solutions to real-world building science problems in decarbonization, electrification, and resilience solutions, while professors offer JUMP into STEM as part of their curricula, connecting DOE topics of interest with students. JUMP into STEM completed its fifth year in January 2023 with an in-person final competition event at the National Renewable Energy Laboratory. A 2022 impact study found that JUMP into STEM directly impacted the career choice or provided career development of 88% of study participants.

Incubating Market-Propelled Entrepreneurial Mindset at the Labs and Beyond (IMPEL)

4:00 – 6:00 PM, Tuesday, April 25. MADISON Rm. ***Organized by Nicholas Ryan***

IMPEL, funded by BTO and implemented by Berkeley National Laboratory, is a rapid innovation and deployment engine of climate technologies. IMPEL supports building technology innovators from small businesses, academia, and DOE national labs by providing customized pitch and business model training, carbon tools training, mentoring and innovation networks, and access to powerful public and private pipelines for potential demonstration and funding. This session will feature:

'IMPEL Your Innovation' Showcase: *5-7 IMPEL Innovators pitch their ideas in a "Shark Tank"-style session to a panel of potential funders and industry experts. The panelists and audience will provide advice and recommendations to advance the Innovators' building technologies towards climate impact.*

Accelerating Commercialization of 'Hard Tech' Building Innovations: *A panel of startups, investors, and entrepreneurs, discuss how hard-tech innovators can prepare for customer discovery and find product-market fits that cross the "valley of death" and succeed in scaling and commercialization.*

Connected Communities

4:00 – 6:00 PM, Tuesday, April 25. POTOMAC Rm. ***Organized by Cecilia Johnson***

A Connected Community is a group of grid-interactive efficient buildings (GEBs) incorporating energy efficient and flexible end use equipment, distributed energy resources, and coordinated controls and smart technologies to respond to and meet building and grid needs. Due to a consistent need for more data and demonstrations on the potential for buildings to provide demand flexibility reliably and repeatedly, DOE has selected 10 projects to receive $61 million through BTO, Solar Energy Technologies Office, Vehicle Technologies Office, and the Office of Electricity. Connected Communities test the value of GEBs through multiple demonstrations in diverse building types, climate zones, and regulatory environments. In this session, gain familiarity with the Connected Communities Cohort and the teams' individual goals and strategies.

Building America

9:00 AM – 1:00 PM, Wednesday, April 26. POTOMAC Rm. ***Organized by Eric Werling***

DOE's Building America Program has been a source of cutting-edge building science technologies in residential building energy efficiency and performance, indoor air quality and comfort, durability, quality, and affordability for over 25 years.

In this session, twelve Building America teams will share highlights from their latest research. Panel discussions will explore critical technical challenges and future opportunities in three areas: 1) High Performance Envelopes, 2) Quality Installation & High-Performance HVAC, and 3) Smart & Healthy Homes. Participants will also learn how Building America's Subject Matter Experts respond to near-term needs of industry stakeholders through targeted technical support activities.

The session will conclude with a group discussion about the role of Building America as the Program adapts to address the hard-to-solve technical challenges of decarbonizing existing residential buildings by funding expert teams to develop, demonstrate, and validate equitably scalable residential retrofitting solutions in communities across the country.

FAST-DERMS (Controls and Grid Integration)

9:00 – 11:00 AM, Wednesday, April 26. MADISON Rm. ***Organized by Brian Walker***

Federated Architecture for Secure and Transactive Distributed Energy Resource Management Solutions (FAST-DERMS) is a multi-laboratory project that develops and demonstrates a scalable control architecture for managing heterogenous populations of utility-scale and behind-the-meter resources to provide simultaneous transmission and distribution services. The architecture simplifies interactions between transmission operators, distribution operators, and aggregators like building energy management systems; and supports direct, transactive, and/or aggregated resource management. During the session, the team will:

- *present the architectural approach,*
- *describe the reference controls implementation in development by the team,*
- *discuss use cases, distribution feeders, software simulation platform and laboratory environments used for demonstration,*
- *present a selection of preliminary simulation results of the reference controls, and*
- *discuss future plans and projects leveraging this work.*

Building Energy Codes

11:30 AM – 1:00 PM, Wednesday, April 26. JACKSON Rm. ***Organized by Jeremy Williams***

The Building Energy Codes Program (BECP) in BTO supports the development, adoption, implementation, and enforcement of building energy codes to improve building energy efficiency and to maintain occupant health, comfort, and safety. BECP fulfills its technical assistance role by working closely with a variety of stakeholders, including energy efficiency organizations, code development bodies, building design and construction representatives, the code enforcement community, product manufacturers, and the public. This session will:

- *provide an overview of key Building Energy Program activities ranging from state technical assistance to energy resilience,*
- *cover the latest in Building Energy Codes by highlighting recent updates and progress in model codes and major themes to watch for in the coming months, and*
- *highlight technical assistance and funding opportunities facilitated by the Bipartisan Infrastructure Law and the Inflation Reduction Act.*

Advanced Building Construction (ABC)

2:00 PM – 5:30 PM, Wednesday, April 26. JACKSON Rm. HYBRID VIEWING AVAILABLE ***Organized by Dale Hoffmeyer***

In 2019, BTO launched the Advanced Building Construction (ABC) Initiative to work directly with industry to address opportunities and challenges in developing new, industrialized, replicable, and technology-driven approaches for building renovation and new building construction. ABC approaches are designed to provide solutions at the speed and scale required to achieve a net-zero American building stock by 2050.

This session provides an overview of ABC New Construction and ABC Retrofit Demonstration funded under the 2019 ABC Funding Opportunity Announcement; these R&D projects focus on innovative construction technologies and practices that improve building quality, affordability, and efficiency while increasing the competitiveness of the U.S. construction sector. The session will cover many topics (advanced sealants, additive manufacturing, modular construction, advanced structural design software, HVAC innovations for manufactured housing, and whole building retrofits) and will include a roundtable on the Initiative's work to date and future opportunities to demonstrate the impact of ABC.

Energy Equity & Environmental Justice/Diversity, Equity, and Inclusion (EEEJ/DEI)

2:00 PM – 6:00 PM, Wednesday, April 26. POTOMAC Rm. HYBRID VIEWING AVAILABLE ***Organized by Mariana Egea-Casalduc***

The Commercial Buildings Integration (CBI) Program at BTO has an ambitious goal to achieve rapid, efficient, decarbonization in line with economy-wide net-zero emissions by 2050 while delivering wide-ranging benefits to communities. To achieve this goal, the CBI team has interwoven energy equity and environmental justice priorities (EEEJ) across multiple project portfolios and activities performed by the national laboratories.

This session provides an overview of how the CBI team has established a collaborative inter-laboratory approach to enable equitable research, development, and deployment (RD&D) of clean energy technologies and practices. Topics covered will include best practices for thoughtfully including underserved communities in technology research and field validation activities to ensure they participate and benefit from the RD&D pipeline. This session will also cover how the CBI team has tailored outreach and technology campaign recruitment activities to fit the needs of historically underserved and disinvested building types, such as K-12 schools and small businesses.

Building Performance Standards (BPS)

2:00 – 3:30 PM, Thursday, April 27. CAPITAL VIEW Rm. ***Organized by Billierae Engelman***

The Building Energy Standards (BPS) are outcome-based policies and laws moving the needle on energy performance and emissions reductions in existing buildings. Across the country, state and local jurisdictions continue to design, adopt, and implement BPS to address a wide range of energy and climate goals for their building stock. BTO is excited to support this policy movement with technical assistance, analysis, tools, and other resources to help subnational jurisdictions reach their ambitious goals through BPS. This session will:

- *highlight the landscape of BPS adoption to date, including innovative and equitable adoption and implementation approaches,*
- *provide a deep dive into the ongoing national laboratory analyses supporting BPS and BTO's suite of software and tools appropriate for BPS use, and*
- *showcase some examples of BPS technical assistance provided to jurisdictions through DOE and EPA's collaborative BPS Technical Assistance Network*

National Emerging Technologies Collaborative (NETC) (by invitation only)

2:00 PM, Thursday, April 27 – 1:00 PM, Friday, April 28. WILSON/HARRISON/JACKSON Rm. ***Organized by Cecilia Johnson and Nicholas Ryan***

BTO is pleased to launch the National Emerging Technologies Collaborative (NETC) during the Peer Review. NETC aims to foster better informed and more coordinated RD&D across organizations supporting the research, development, demonstration, investment, and deployment of emerging building technologies for decarbonization. NETC will develop mechanisms to exchange insights on emerging building technology RD&D, leverage collective knowledge and actionable data to overcome systemic barriers, and provide guidance on federal priorities and incentives. This inaugural convention will unite representatives from the built environment ecosystem, including state energy offices, utilities, public utility commissions, regional energy efficiency organizations, private investors, and R&D groups.

IV. AT-A-GLANCE (table)

Gray cells with blue text denote special sessions; abbreviations at the end

MONDAY, APRIL 24, 2023

Eastern Time	ROOM:	COMMONWEALTH	MADISON	WILSON/ HARRISON	JACKSON	POTOMAC	CAPITAL VIEW	LINCOLN HALL
8:00 AM 8:30 AM	Breakfast							
9:00 AM 9:30 AM 10:00 AM 10:30 AM	Session 1	Heating, Ventilation, & Air Conditioning in Emerging Technologies (HVAC - ET)		STRATEGY & ROADMAP	Thermal Energy Storage (TES)	Data Tools/ Analysis	Controls	Set up poster boards
11:00 AM	Break							
11:30 AM 12:00 PM 12:30 PM	Session 2	HVAC (ET)	HEALTHY BUILDINGS SHOWCASE	STRATEGY & ROADMAP	TES	Analysis	Controls	Set up poster boards
1:00 PM 1:30 PM	Lunch							
2:00 PM 2:30 PM 3:00 PM 3:30 PM	PLENARY SESSION #1 CRYSTAL BALLROOM (Salons A-E)							Presenters hang posters
4:00 PM	Break							
4:30 PM 5:00 PM 5:30 PM	POSTER SESSION LINCOLN HALL							

TUESDAY, APRIL 25, 2023

	COMMONWEALTH	MADISON	WILSON/ HARRISON	JACKSON	POTOMAC	CAPITAL VIEW	LINCOLN HALL
Breakfast							
PLENARY SESSION #2 (Salon A-E) CRYSTAL BALLROOM							POSTER VIEWING
Break							
Session 3	HVAC (ET)	Technology-to-Market (T2M): JUMP into STEM	Solid-State Lighting (SSL)	TES	Analysis	Windows	POSTER VIEWING
Break							
Session 4	HVAC (ET)	Workforce Develop. & Education	SSL	TES		Windows	POSTER VIEWING
Lunch							
Session 5	HVAC (ET)	Workforce Develop. & Education	SSL	TES	Controls	Windows	POSTER VIEWING
Break							
Session 6	HVAC (ET)	T2M IMPEL Your Innovation; Accelerating Commercialization of 'Hard Tech' Building Innovations	SSL	TES	CONNECTED COMMUNITIES	Windows	POSTER VIEWING

Breakfast and Lunch served in Crystal Ballroom.
Refreshments available during Breaks.

Gray cells with blue text denote special sessions; abbreviations at the end

WEDNESDAY, APRIL 26, 2023

Eastern Time	ROOM: COMMONWEALTH	MADISON	WILSON/ HARRISON	JACKSON	POTOMAC	CAPITAL VIEW	LINCOLN HALL
8:00 AM – 8:30 AM	Breakfast						
9:00 AM – 10:00 AM – 10:30 AM	Session 7	HVAC (ET)	FAST-DERMS	SSL	TES	BUILDING AMERICA	Windows	POSTER VIEWING
11:00 AM	Break						
11:30 AM – 12:00 PM – 12:30 PM	Session 8	HVAC (ET)	Envelope	SSL	BUILDING ENERGY CODES	BUILDING AMERICA	Building Energy Modeling (BEM)	POSTER VIEWING
1:00 PM – 1:30 PM	Lunch						
2:00 PM – 2:30 PM – 3:00 PM	Session 9	HVAC (ET)	Envelope	Building Electric Appliances, Devices, and Systems (BEADS)	ADVANCED BUILDING CONSTRUCTION (ABC)	ENERGY EQUITY AND ENVIRONMENTAL JUSTICE	BEM	POSTER VIEWING
3:30 PM	Break						
4:00 PM – 4:30 PM – 5:00 PM – 5:30 PM	Session 10	HVAC (ET)	Envelope	BEADS	ABC	EEEJ/DEI	IBUILD	POSTER VIEWING

THURSDAY, APRIL 27, 2023

	COMMONWEALTH	MADISON	WILSON/ HARRISON	JACKSON	POTOMAC	CAPITAL VIEW	LINCOLN HALL
Breakfast							
Session 11	HVAC (ET)	Envelope	BEADS		HVAC (CBI, RBI)	Commercial Building Integration (CBI)	Presenters take down posters
Break							
Session 12	HVAC (ET)	Envelope	T2M EPIC Syracuse		HVAC (CBI, RBI)	CBI	Presenters take down posters
Lunch							
Session 13	HVAC (ET)	Envelope	National Emerging Technologies Collaborative (NETC)		HVAC (CBI, RBI)	BUILDING PERFORMANCE STANDARDS	Take down poster boards
Break							
Session 14	HVAC (ET)		NETC				Take down poster boards

Breakfast and Lunch served in Crystal Ballroom.
Refreshments available during Breaks.

Gray cells with blue text denote special sessions; abbreviations at the end

	FRIDAY, APRIL 28, 2023
Eastern Time	WILSON/HARRISON/JACKSON
8:00 AM	Breakfast
8:30 AM	
9:00 AM	NETC
9:30 AM	
10:00 AM	
10:30 AM	
11:00 AM	Break
11:30 AM	NETC
12:00 PM	
12:30 PM	
1:00 PM	
1:30 PM	
2:00 PM	
2:30 PM	
3:00 PM	
3:30 PM	
4:00 PM	
4:30 PM	
5:00 PM	
5:30 PM	

Breakfast and Lunch served in Crystal Ballroom.
Refreshments available during Breaks.

Abbreviations:	
ABC	Advanced Building Construction
BEADS	Building Electric Appliances, Devices, and Systems
BEM	Building Energy Modeling
BTO	Building Technologies Office
CBI	Commercial Building Integration
DEI	Diversity, Equity, & Inclusion
EEEJ	Energy Equity & Environmental Justice
EERE	Office of Energy Efficiency & Renewable Energy
ET	Emerging Technologies
FAST-DERMS	Federated Architecture for Secure and Transactive Distributed Energy Resource Management Solutions
HVAC	Heating, Ventilation, and Air Conditioning
IBUILD	Innovation in Buildings (Graduate Research Fellowship)
IMPEL	
NETC	National Emerging Technologies Collaborative
RBI	Residential Building Integration
SSL	Solid-State Lighting
T2M	Technology-to-Market
TES	Thermal Energy Storage

III. AT-A-GLANCE (list)

NOTE: All room assignments are tentative and may change in the final program.

Monday, April 24

Session 1. 9:00-11:00 AM

HEATING, VENTILATION, AND AIR CONDITIONING (ET)	*COMMONWEALTH ROOM, LEAD – ANTONIO BOUZA*
BTO STRATEGY & ROADMAP	*WILSON/HARRISON ROOM, LEAD – ERIC WILSON, JARED LANGEVIN*
THERMAL ENERGY STORAGE	*JACKSON ROOM, LEAD – SVEN MUMME*
DATA TOOLS/ANALYSIS	*POTOMAC ROOM, LEAD – SAMUEL PETTY*
CONTROLS	*CAPITAL VIEW ROOM, LEAD – AMIR ROTH*

Session 2. 11:30 AM-1:00 PM

HEATING, VENTILATION, AND AIR CONDITIONING (ET)	*COMMONWEALTH ROOM, LEAD – ANTONIO BOUZA*
HEALTHY BUILDINGS SHOWCASE	*MADISON ROOM, LEAD – WYATT MERRILL, SAMUEL PETTY, ERIC WERLING*
BTO STRATEGY & ROADMAP	*WILSON/HARRISON ROOM, LEAD – ERIC WILSON, JARED LANGEVIN*
THERMAL ENERGY STORAGE	*JACKSON ROOM, LEAD – SVEN MUMME*
DATA TOOLS/ANALYSIS	*POTOMAC ROOM, LEAD – DALE HOFFMEYER*
CONTROLS	*CAPITAL VIEW ROOM, LEAD – AMIR ROTH*

Plenary Session #1. 2:00-4:00 PM — *CRYSTAL BALLROOM*

Poster Session. 4:30-6:00 PM — *LINCOLN HALL*

Tuesday, April 25

Plenary Session #2. 9:00-10:00 AM — *CRYSTAL BALLROOM*

Session 3. 10:15-11:15 AM

HEATING, VENTILATION, AND AIR CONDITIONING (ET)	*COMMONWEALTH ROOM, LEAD – ANTONIO BOUZA*
JUMP INTO STEM	*MADISON ROOM, LEAD – NICHOLAS RYAN*
SOLID-STATE LIGHTING	*WILSON/HARRISON ROOM, LEAD – WYATT MERRILL*
THERMAL ENERGY STORAGE	*JACKSON ROOM, LEAD – SVEN MUMME*
ANALYSIS	*POTOMAC ROOM, LEAD – AMIR ROTH, SAMUEL PETTY*
WINDOWS	*CAPITAL VIEW ROOM, LEAD – MARC LAFRANCE*

Session 4. 11:30 AM-1:00 PM

HEATING, VENTILATION, AND AIR CONDITIONING (ET)	*COMMONWEALTH ROOM, LEAD – ANTONIO BOUZA*
WORKFORCE DEVELOPMENT AND EDUCATION	*MADISON ROOM, LEAD – JENNY WIEDOWER*
SOLID-STATE LIGHTING	*WILSON/HARRISON ROOM, LEAD – WYATT MERRILL*
THERMAL ENERGY STORAGE	*JACKSON ROOM, LEAD – SVEN MUMME*
ANALYSIS	*POTOMAC ROOM, LEAD – AMIR ROTH, SAMUEL PETTY*
WINDOWS	*CAPITAL VIEW ROOM, LEAD – MARC LAFRANCE*

Special sessions denoted in GREEN TEXT.

Session 5. 2:00-3:30 PM

HEATING, VENTILATION, AND AIR CONDITIONING (ET)	*COMMONWEALTH ROOM, LEAD – ANTONIO BOUZA*
WORKFORCE DEVELOPMENT AND EDUCATION	*MADISON ROOM, LEAD – JENNY WIEDOWER*
SOLID-STATE LIGHTING	*WILSON/HARRISON ROOM, LEAD – WYATT MERRILL*
THERMAL ENERGY STORAGE	*JACKSON ROOM, LEAD – SVEN MUMME*
CONTROLS	*POTOMAC ROOM, LEAD – MARC LAFRANCE, BRIAN WALKER*
WINDOWS	*CAPITAL VIEW ROOM, LEAD – MARC LAFRANCE*

Session 6. 4:00-6:00 PM

HEATING, VENTILATION, AND AIR CONDITIONING (ET)	*COMMONWEALTH ROOM, LEAD – ANTONIO BOUZA*
IMPEL	*MADISON ROOM, LEAD – NICHOLAS RYAN*
SOLID-STATE LIGHTING	*WILSON/HARRISON ROOM, LEAD – WYATT MERRILL*
THERMAL ENERGY STORAGE	*JACKSON ROOM, LEAD – SVEN MUMME*
CONNECTED COMMUNITIES	*POTOMAC ROOM, LEAD – CECILIA JOHNSON*
WINDOWS	*CAPITAL VIEW ROOM, LEAD – MARC LAFRANCE*

Wednesday, April 26

Session 7. 9:00-11:00 AM

HEATING, VENTILATION, AND AIR CONDITIONING (ET)	*COMMONWEALTH ROOM, LEAD – ANTONIO BOUZA*
FAST-DERMS (CONTROLS AND GRID INTEGRATION)	*MADISON ROOM, LEAD – BRIAN WALKER*
SOLID-STATE LIGHTING	*WILSON/HARRISON ROOM, LEAD – WYATT MERRILL*
THERMAL ENERGY STORAGE	*JACKSON ROOM, LEAD – SVEN MUMME*
BUILDING AMERICA	*POTOMAC ROOM, LEAD – ERIC WERLING*
WINDOWS	*CAPITAL VIEW ROOM, LEAD – MARC LAFRANCE*

Session 8. 11:30 AM-1:00 PM

HEATING, VENTILATION, AND AIR CONDITIONING (ET)	*COMMONWEALTH ROOM, LEAD – ANTONIO BOUZA*
ENVELOPE	*MADISON ROOM, LEAD – SVEN MUMME*
SOLID-STATE LIGHTING	*WILSON/HARRISON ROOM, LEAD – WYATT MERRILL*
BUILDING ENERGY CODES	*JACKSON ROOM, LEAD – JEREMY WILLIAMS*
BUILDING AMERICA	*POTOMAC ROOM, LEAD – ERIC WERLING*
BUILDING ENERGY MODELING	*CAPITAL VIEW ROOM, LEAD – AMIR ROTH*

Session 9. 2:00-3:30 PM

HEATING, VENTILATION, AND AIR CONDITIONING (ET)	*COMMONWEALTH ROOM, LEAD – ANTONIO BOUZA*
ENVELOPE	*MADISON ROOM, LEAD – SVEN MUMME*
BUILDING ELECTRIC APPLIANCES, DEVICES, AND SYSTEMS	*WILSON/HARRISON ROOM, LEAD – WYATT MERRILL*
ADVANCED BUILDING CONSTRUCTION*	*JACKSON ROOM, LEAD – DALE HOFFMEYER*
ENERGY EQUITY & ENVIRONMENTAL JUSTICE/ DIVERSITY, EQUITY, AND INCLUSION*	*POTOMAC ROOM, LEAD – MARIANA EGEA-CASALDUC*
BUILDING ENERGY MODELING	*CAPITAL VIEW ROOM, LEAD – AMIR ROTH*

*** Hybrid viewing (not participation) available; Special sessions denoted in GREEN TEXT.**

Session 10. 4:00-6:00 PM

HEATING, VENTILATION, AND AIR CONDITIONING (ET)	*COMMONWEALTH ROOM, LEAD – ANTONIO BOUZA*
ENVELOPE	*MADISON ROOM, LEAD – SVEN MUMME*
BUILDING ELECTRIC APPLIANCES, DEVICES, AND SYSTEMS (BEADS)	*WILSON/HARRISON ROOM, LEAD – WYATT MERRILL*
ADVANCED BUILDING CONSTRUCTION*	*JACKSON ROOM, LEAD – DALE HOFFMEYER*
ENERGY EQUITY & ENVIRONMENTAL JUSTICE/ DIVERSITY, EQUITY, AND INCLUSION*	*POTOMAC ROOM, LEAD – MARIANA EGEA-CASALDUC*
IBUILD	*CAPITAL VIEW ROOM, LEAD – AMIR ROTH*

Thursday, April 27

Session 11. 9:00-11:00 AM

HEATING, VENTILATION, AND AIR CONDITIONING (ET)	*COMMONWEALTH ROOM, LEAD – ANTONIO BOUZA*
ENVELOPE	*MADISON ROOM, LEAD – SVEN MUMME*
BUILDING ELECTRIC APPLIANCES, DEVICES, AND SYSTEMS (BEADS)	*WILSON/HARRISON ROOM, LEAD – WYATT MERRILL*
HEATING, VENTILATION, AND AIR CONDITIONING (CBI, RBI)	*POTOMAC ROOM, LEAD – MARC LAFRANCE*
COMMERCIAL BUILDING INTEGRATION	*CAPITAL VIEW ROOM, LEAD – HAYES JONES*

Session 12. 11:30 AM-1:00 PM

HEATING, VENTILATION, AND AIR CONDITIONING (ET)	*COMMONWEALTH ROOM, LEAD – ANTONIO BOUZA*
ENVELOPE	*MADISON ROOM, LEAD – SVEN MUMME*
TECHNOLOGY-TO-MARKET	*WILSON/HARRISON ROOM, LEAD – NICHOLAS RYAN*
HEATING, VENTILATION, AND AIR CONDITIONING (CBI, RBI)	*POTOMAC ROOM, LEAD – MARC LAFRANCE*
COMMERCIAL BUILDING INTEGRATION	*CAPITAL VIEW ROOM, LEAD – HAYES JONES*

Session 13. 2:00-3:30 PM

HEATING, VENTILATION, AND AIR CONDITIONING (ET)	*COMMONWEALTH ROOM, LEAD – ANTONIO BOUZA*
ENVELOPE	*MADISON ROOM, LEAD – SVEN MUMME*
NATIONAL EMERGING TECHNOLOGIES COLLABORATIVE	*WILSON/HARRISON, JACKSON ROOM, LEAD – CECILIA JOHNSON, NICHOLAS RYAN*
HEATING, VENTILATION, AND AIR CONDITIONING (CBI, RBI)	*POTOMAC ROOM, LEAD – MARC LAFRANCE*
BUILDING PERFORMANCE STANDARDS	*CAPITAL VIEW ROOM, LEAD – BILLIRAE ENGELMAN*

Session 14. 4:00-6:00 PM

HEATING, VENTILATION, AND AIR CONDITIONING (ET)	*COMMONWEALTH ROOM, LEAD – ANTONIO BOUZA*
NATIONAL EMERGING TECHNOLOGIES COLLABORATIVE (BY INVITATION ONLY)	*WILSON/HARRISON/JACKSON ROOM, LEAD – CECILIA JOHNSON, NICHOLAS RYAN*

Friday, April 28

Workshop. 9:00 AM-1:00 PM

NATIONAL EMERGING TECHNOLOGIES COLLABORATIVE (BY INVITATION ONLY)	*WILSON/HARRISON/JACKSON ROOM, LEAD – CECILIA JOHNSON, NICHOLAS RYAN*

*** Hybrid viewing (not participation) available; Special sessions denoted in GREEN TEXT.**

IV. FULL AGENDA

Monday, April 24

Session 1. 9:00-11:00 AM

HEATING, VENTILATION, AND AIR CONDITIONING (HVAC - ET)	*COMMONWEALTH ROOM, LEAD – ANTONIO BOUZA*
9:00	Cold Climate Heat Pump using Vapor Compression Cycle Cascaded with a Thermoelectric Heat Pump ***Sreenidhi Krishnamoorthy***
9:30	High Temperature Combination HPs for Low-Cost Electrification ***Nelson James***
10:00	Reduced Cost Heat Pump Space- and Water-Heating in Cold Climates ***Iain Walker***
10:30	Separating Sensible and Latent Cooling with Electrically Charged Rotating Vortexes and Vapor Capturing Air Handler Technology ***Lorenzo Cremaschi***

BTO STRATEGY & ROADMAP	*WILSON/HARRISON ROOM, LEAD – ERIC WILSON, JARED LANGEVIN*
9:30	BTO Building Decarbonization Strategy ***Ram Narayanamurthy***
10:15	Feedback and Discussion *Facilitated by* ***Rebecca Ciraulo***

THERMAL ENERGY STORAGE (TES)	*JACKSON ROOM, LEAD – SVEN MUMME*
9:00	Thermal Energy Storage Overview ***Sven Mumme***
9:30	Packaged Integrated HP Coupled with a Two-Stream Liquid Desiccant System for Sensible and Latent Energy Storage in Building (CRADA w/ Emerson) ***Lingshi Wang***
10:00	Energy Storing Efficient HVAC ***Eric Kozubal***

DATA TOOLS/ANALYSIS	*POTOMAC ROOM, LEAD – SAMUEL PETTY*
9:00	BETTER ***Carolyn Szum***
9:30	Asset Score ***Supriya Goel***
10:00	SEED ***Nicholas Long***
10:30	Audit Template ***Supriya Goel***

Special sessions denoted in GREEN TEXT.

Monday, April 24 (continued)

CONTROLS — ***CAPITAL VIEW ROOM, LEAD – AMIR ROTH***

9:00	Spawn ***Michael Wetter***
9:30	Open Building Control II ***Michael Wetter***
10:00	BOPTest ***David Blum***
10:30	Benchmarking Smart Thermostats ***Kyle Benne***

BREAK: 11:00-11:30 AM

Session 2. 11:30 AM-1:00 PM

HEATING, VENTILATION, AND AIR CONDITIONING (HVAC - ET) — ***COMMONWEALTH ROOM, LEAD – ANTONIO BOUZA***

11:30	Enabling CO_2 Isothermal Compression Using Liquid Piston and Integrated Gas Cooler ***Yunho Hwang***
12:00	Grid Interactive Micro-Distributed Refrigerated Display Case ***Juan Catano Montoya***
12:30	Sustainable Heat Pump Systems for Electrified Transitions in Winter Markets ***Jorge E. Gonzalez***

HEALTHY BUILDINGS SHOWCASE — ***MADISON ROOM, LEAD – WYATT MERRILL, SAMUEL PETTY, ERIC WERLING, JONATHAN COHEN***

11:30	Legacy Research, Pandemic Response, and What's Next for BTO Programs ***Hayes Jones, Wyatt Merrill, Eric Werling***
12:15	Moderated Panel Discussion ***Rengie Chan, Tracy, Enger, Naomi Miller, Brett Singer***

BTO STRATEGY & ROADMAP — ***WILSON/HARRISON ROOM, LEAD – ERIC WILSON, JARED LANGEVIN***

11:30	Building Decarbonization at the State-Level: Roundtable ***Mikhail Haramati (NY), Galen Nelson (MA), Will Vicent (CA)***
12:30	BTO and EERE Cross-Sectoral Decarbonization Analysis (DECARB) ***Andy Satchwell***

THERMAL ENERGY STORAGE (TES) — ***JACKSON ROOM, LEAD – SVEN MUMME***

11:30	Development of TES Systems with Thermally Anisotropic Building Envelopes ***Joseph Rendall***
12:00	Demonstration of Active Insulation Systems ***Mikael Salonvaara***
12:30	Thermal Energy Storage for Smart Building Envelopes ***Chris Dames, Ravi Kishore***

Special sessions denoted in GREEN TEXT.

Monday, April 24 (continued)

DATA TOOLS/ANALYSIS — ***POTOMAC ROOM, LEAD – DALE HOFFMEYER***

11:30	Advancing Residential Building Decarbonization: Understanding Home Occupant Decision-Making Dynamics ***Chrissi Antonopoulos***
12:15	Challenges and Opportunities for Home Decarbonization ***Iain Walker***

CONTROLS — ***CAPITAL VIEW ROOM, LEAD – AMIR ROTH***

11:30	Semantic Modeling and Interoperability ***Avijit Saha***
12:00	ANIMATE (ConStrain) ***Yan Chen***
12:30	VOLTTRON ***Jereme Haack***

LUNCH: 1:00-2:00 PM

Plenary Session #1. 2:00-4:00 PM — *CRYSTAL BALLROOM*

BREAK: 4:00-4:30 PM

Poster Session. 4:30-6:00 PM — *LINCOLN HALL*

END OF DAY

Special sessions denoted in GREEN TEXT.

Tuesday, April 25

Plenary Session #2. 9:00-10:00 AM

CRYSTAL BALLROOM

BREAK: 10:00-10:10 AM

Session 3. 10:15-11:15 AM

HEATING, VENTILATION, AND AIR CONDITIONING (HVAC - ET)	*COMMONWEALTH ROOM, LEAD – ANTONIO BOUZA*
10:15	Development of a CO_2 Chiller Heat Pump for Multiple North American Applications ***Brian Fricke***
10:45	Grid-interactive Efficient Buildings by Modular Design of Plug-and-play Equipment ***Kyle Gluesenkamp***

TECHNOLOGY-TO-MARKET (T2M)	*MADISON ROOM, LEAD – NICHOLAS RYAN*
10:15	Generating Decarbonization Impact Through the JUMP into STEM Student Competition ***Yeonjin Bae, Kim Trenbath***

SOLID-STATE LIGHTING (SSL)	*WILSON/HARRISON ROOM, LEAD – WYATT MERRILL*
10:15	Solid-state lighting R&D Overview ***Wyatt Merrill***
10:25	Solutions to Droop and the Green Gap by Novel Carrier Injection ***James Speck***
10:50	Cadmium-Free QD Building Blocks for Human Centric Lighting ***Joseph Treadway***

THERMAL ENERGY STORAGE (TES)	*JACKSON ROOM, LEAD – SVEN MUMME*
10:15	Stable Thermochemical Salt Hydrates for Energy Storage in Buildings ***Suman Kaur***
10:45	Development of a Novel, Thermochemical, Nanocellulose-based Material for TES ***Adam Gladen***

ANALYSIS	*POTOMAC ROOM, LEAD – AMIR ROTH, SAMUEL PETTY*
10:15	Scout ***Aven Satre-Meloy***
10:45	Future Weather ***Ralph Muehleisen***
11:15	ComStock ***Andrew Parker***

Special sessions denoted in GREEN TEXT.

Tuesday, April 25 (continued)

WINDOWS	CAPITAL VIEW ROOM, LEAD – MARC LAFRANCE
10:15	Core Window Durability ***Robert Tenant***
10:45	Vacuum Glazing ***Peter Petit***

BREAK: 11:15-11:30 AM

Session 4. 11:30 AM-1:00 PM

HEATING, VENTILATION, AND AIR CONDITIONING (HVAC - ET)	COMMONWEALTH ROOM, LEAD – ANTONIO BOUZA
11:30	120V Heat Pump Water Heating Replacement Solution for 30–40-gallon Gas Water Heaters ***Kyle Gluesenkamp***
12:00	High Temperature Heat Pump for Commercial Space and Water Heating ***Kashif Nawaz***
12:30	Predictive Device-level Control and Optimal Sizing of Integrated Heat Pump Systems for Deep Decarbonization and Energy Resilience ***Veronica Adetola***

WORKFORCE DEVELOPMENT AND EDUCATION	MADISON ROOM, LEAD – JENNY WIEDOWER
11:30	Remote Coaching with Performance Data for Enhanced Building Operations (Building Re-tuning and On-going Commissioning) ***Paul Reale***
12:00	Dynamic and Responsive Distributed Energy Resource Education Solutions for Building, Fire, and Safety Department Officials ***Kristen Hagerty***
12:30	PATHS: Career Pathways to Advance the Trades in HVAC Services ***Kristin Heinemeier***

SOLID-STATE LIGHTING (SSL)	WILSON/HARRISON ROOM, LEAD – WYATT MERRILL
11:30	Automated Luminaire Design and Local Manufacturing for Highly Efficient, Customized Lighting Solutions ***Sam Mills***
11:55	Microprinting Waveguides for Ultra-thin and Flexible LED Lighting Panels ***Sergey Vasylyev***
12:20	Scalable Thin LED Light Sheet Platform ***Eugene Chow***

Special sessions denoted in GREEN TEXT.

Tuesday, April 25 (continued)

THERMAL ENERGY STORAGE (TES)	JACKSON ROOM, LEAD – SVEN MUMME
11:30	Dual-Purpose – Heating & Cooling – Thermal Battery for Flexible and Energy Efficient Heat Pump Systems ***James Tancabel***
12:00	High Energy Density Hydrogel Thermo-Adsorptive Storage ***Bachir El Fil***
12:30	Low Cost PCM Integration into Heat Pumps ***Tugba Turnaoglu***

ANALYSIS	POTOMAC ROOM, LEAD –SAMUEL PETTY, DALE HOFFMEYER, MEGAN PLOG
11:45	End Use Saving Shapes Project and ResStock updates ***Elaina Present***
12:15	Exploring Equity in Benefit Flows in Commercial Buildings ***Ymbar Polanco Pico***
12:45	Chicago Energy Efficiency Planning and Analysis, and Integrated Retrofit Strategy Validation in Single Family Homes ***Lawrence Kotewa***

WINDOWS	CAPITAL VIEW ROOM, LEAD – MARC LAFRANCE
11:30	Core Window Performance ***Robert Hart, Charlie Curcjia, and Luis Fernandes***

LUNCH: 1:00-2:00 PM

Session 5. 2:00-3:30 PM

HEATING, VENTILATION, AND AIR CONDITIONING (HVAC - ET)	COMMONWEALTH ROOM, LEAD – ANTONIO BOUZA
2:00	Hybrid Manufacturing for High Performance Air-to-Refrigerant Heat Exchangers ***Vikrant C. Aute***
2:30	Smart Low-Cost Heat Pump Refrigerant Leak Sensor ***Vishal Sharma***
3:00	Virtual Sensor-based FDD and Control Suite for Widespread Adoption of Residential Embedded-FDD Heat Pumps ***Donghun Kim***

Special sessions denoted in GREEN TEXT.

Tuesday, April 25 (continued)

WORKFORCE DEVELOPMENT AND EDUCATION — ***MADISON ROOM, LEAD – JENNY WIEDOWER***

2:00	Training the Next Generation of Heat Pump HVAC technicians ***Audrey Knox***
2:30	Construction Methodology Transformation for the Benefit of Workforce Development ***Colby Swanson***
3:00	Western States Building Energy & Controls Apprenticeship (BECA) Program ***Roger Ebbage***

SOLID-STATE LIGHTING (SSL) — ***WILSON/HARRISON ROOM, LEAD – WYATT MERRILL***

2:00	Lossless Beam-width Adjustment with Low-cost Mechanics ***Chris Gladden***
2:25	High Aspect Ratio OLEDs ***Chris Giebink***
2:50	Increasing the Radiative Rates of Triplet Emitters to Achieve Long-lived and Efficient White-Emitting OLEDs ***Stephen Forrest***

THERMAL ENERGY STORAGE (TES) — ***JACKSON ROOM, LEAD – SVEN MUMME***

2:00	THERMAplus, TES Optimized for Integration with Chillers and Heat Pumps ***M. James Grieve***
2:30	Developing a Software Tool for Discovery, Sizing and Sales of TES Systems ***Gamaliel Lodge***
3:00	Model-based Predictive Control and Sensor Technology for Phase-Change TES Systems ***Tony Wang***

CONTROLS — ***POTOMAC ROOM, LEAD – MARC LAFRANCE, BRIAN WALKER***

2:00	Controls/Comfort ***Michael Kane***
2:30	Automated Fault Detection and Diagnostics Data Curation and Benchmarking ***Jessica Granderson***

WINDOWS — ***CAPITAL VIEW ROOM, LEAD – MARC LAFRANCE***

2:00	Low-Cost, High-Performance Electrochromic Devices ***Christopher Angelo***
2:30	Dynamic Reflective Metals ***Tyler S. Hernandez***
3:00	Aerogel Highly Insulating Materials ***Ivan I. Smalyukh***

BREAK: 3:30-4:00 PM

Tuesday, April 25 (continued)

Session 6. 4:00-6:00 PM

HEATING, VENTILATION, AND AIR CONDITIONING (HVAC - ET) — ***COMMONWEALTH ROOM, LEAD – ANTONIO BOUZA***

4:00	Compressor Technology Development for Refrigerants with GWP<150 ***Junjie Luo***
4:30	PoolHT150 – Pool Boiling Heat Transfer for Refrigerants with GWP<150 ***Cheng-Min Yang***
5:00	FlowHT150 – Heat Transfer and Pressure Drop Characterization of GWP<150 Refrigerants ***Saad Jajja***
5:30	Super-Efficient Air-Conditioning Unit ***Demis Pandelidis***

TECHNOLOGY-TO-MARKET (T2M) — ***MADISON ROOM, LEAD – NICHOLAS RYAN***

4:00	IMPEL Your Innovation ***Reshma Singh***
5:00	Accelerating Commercialization of 'Hard Tech' Building Innovations

SOLID-STATE LIGHTING (SSL) — ***WILSON/HARRISON ROOM, LEAD – WYATT MERRILL***

4:00	Development of Lighting Application Efficacy Measurement Framework ***Dorukalp Durmus***
4:25	Optimizing Tunable Lighting for Human Health ***John Hanifin***
4:50	Development & Commercialization of Design Tools for Predicting Occupant and Energy Impacts of Building Lighting Systems ***Sarah Safranek***

THERMAL ENERGY STORAGE (TES) — ***JACKSON ROOM, LEAD – SVEN MUMME***

4:00	Behind the Meter (BTM) Thermal Energy Storage in Buildings ***Jason Woods***
4:30	Multipurpose Latent Heat Storage System for Building Applications - Development of Low-Cost, High-Performance, Easy-to-Apply, Non-Flammable, Inorganic Phase Change Material (PCM) Technology ***Jan Kosny***
5:00	High-Density, Low-Hysteresis Thermal Storage using Hydrated Salts in Surface-Functionalized Hydrogels ***Sanjiv Sinha***
5:30	Wall Embedded Multi-Functional Heat pump with Energy Storage systems For Grid-Responsive and Weather-Transactive Controls ***Yanfei Li***

CONNECTED COMMUNITIES — ***POTOMAC ROOM, LEAD – CECILIA JOHNSON***

Special sessions denoted in GREEN TEXT.

Tuesday, April 25 (continued)

WINDOWS ***CAPITAL VIEW ROOM, LEAD – MARC LAFRANCE***

4:00	Dynamic Highly Insulating Windows ***Robert Clark***
4:30	Partnership for Advanced Window Solutions ***Katie Cort, Robert Hart***

END OF DAY

Wednesday, April 26

Session 7. 9:00-11:00 AM

HEATING, VENTILATION, AND AIR CONDITIONING (HVAC - ET) — ***COMMONWEALTH ROOM, LEAD – ANTONIO BOUZA***

9:00	International HVAC&R Research Collaboration Through IEA & IIR ***Brian Fricke***
9:30	Next Generation Low-Cost Direct-Expansion Heat Pumps Using Refrigerant Mixtures with GWP<150 (CRADA with Emerson Helix Center) ***Zhenning Li***
10:00	Multi-functional Equipment for Direct Decarbonization with Improved Indoor Air Quality ***Kashif Nawaz***
10:30	Reconfigure System Architecture for Low GWP Refrigerants (CRADA Emerson) ***Hanlong Wan***

FAST-DERMS (CONTROLS AND GRID INTEGRATION) — ***MADISON ROOM, LEAD – BRIAN WALKER***

9:00	Federated Architecture for Secure and Transactive Distributed Energy Resource Management Solutions (FAST-DERMS) Overview ***Annabelle Pratt***
9:25	FAST-DERMS Reference Controls Development and Simulation Results ***Jin Dong, Jason MacDonald***
10:25	Laboratory Demonstration and Future FAST-DERMS Work ***James Ogle, Annabelle Pratt***

SOLID-STATE LIGHTING (SSL) — ***WILSON/HARRISON ROOM, LEAD – WYATT MERRILL***

9:00	Pacific Northwest National Lab – Advanced Lighting Team Introduction ***Wyatt Merrill***
9:15	Field research & solutions ***Andrea Wilkerson***
10:00	Human Factors Research ***Michael Royer***
10:30	Sustainability and Life Cycle Analysis ***Kate Hickcox***

THERMAL ENERGY STORAGE (TES) — ***JACKSON ROOM, LEAD – SVEN MUMME***

9:00	A New Approach to Encapsulate Salt Hydrate PCM ***Jaswinder Sharma***
9:30	Icephobic Heat Exchange for Efficient, Resilient Building Cooling ***Levon Atoyan***
10:00	Salt Hydrate Eutectic Thermal Energy Storage for Building Thermal Regulation ***Patrick Shamberger***
10:30	Additive Manufacturing to Enable High Performance Salt-hydrate Based Thermal Energy Storage Products ***Wale Odukomaiya***

Special sessions denoted in GREEN TEXT.

Wednesday, April 26 (continued)

BUILDING AMERICA — ***POTOMAC ROOM, LEAD – ERIC WERLING***

9:00	Program Overview ***Eric Werling, Kyle Biega, Lena Burkett***
9:20	High Performance Envelope ***Pat Huelman, Nick Cindrich, Brett Webster, Michael Gevelber***
10:10	Quality Installation and High Performance HVAC ***Eric Martin, David Yuill, Hugh Magande, Robb Aldrich***

WINDOWS — ***CAPITAL VIEW ROOM, LEAD – MARC LAFRANCE***

9:00	Storm Window and Insulating Panel (SWIP) Campaign ***Christian Valoria***
9:30	Adding Exterior Insulation Siding and Windows ***Patricia Gunderson, Vanessa Stevens***
10:30	R5 Windows and Attachments ***Katie Cort***

BREAK: 11:00-11:30 AM

Session 8. 11:30 AM-1:00 PM

HEATING, VENTILATION, AND AIR CONDITIONING (HVAC - ET) — ***COMMONWEALTH ROOM, LEAD – ANTONIO BOUZA***

11:30	Al-Ce Alloy Based Compact Heat Exchanger for Refrigerant Charge Reduction and Unprecedented Durability (CRADA Eck) ***Jamieson Brechtl***
12:00	Low Charge Heat Pump Water Heater Using Propane (CRADA Rheem) ***Mingkan Zhang***
12:30	Cost Compression for Multifamily Heat Pump Water Heaters ***Joseph Rendall***

ENVELOPE — ***MADISON ROOM, LEAD – SVEN MUMME***

11:30	Opaque Envelope Overview ***Sven Mumme***
12:00	High Performance Insulated Cladding ***Katherine Faulkner***
12:30	Insulated Siding for Residential Retrofits ***Ari Rapport***

Special sessions denoted in GREEN TEXT.

Wednesday, April 26 (continued)

SOLID-STATE LIGHTING (SSL)	*WILSON/HARRISON ROOM, LEAD – WYATT MERRILL*
11:30	Germicidal Ultraviolet Systems Disinfection for Energy Savings, Decarbonization, and Healthier Buildings ***Gabriel Arnold***
12:15	Data-driven Electrical Systems (DDES) ***Michael Poplawski***

BUILDING ENERGY CODES	*JACKSON ROOM, LEAD – JEREMY WILLIAMS*

BUILDING AMERICA	*POTOMAC ROOM, LEAD – ERIC WERLING*
11:30	Smart and Healthy Homes ***Zheng O'Neill, Li Song, Brett Singer, Chrissi Antonopoulos, Eric Martin***
12:30	The Future of Building America ***Nick Cindrich, Lena Burkett***

BUILDING ENERGY MODELING (BEM)	*CAPITAL VIEW ROOM, LEAD – AMIR ROTH*
11:30	OpenStudio ***Timothy Coleman***
12:00	ASHRAE Standard 140 ***Ralph Muehleisen***
12:30	ASHRAE Standard 205 ***Ralph Muehleisen***

LUNCH: 1:00-2:00 PM

Session 9. 2:00-3:30 PM

HEATING, VENTILATION, AND AIR CONDITIONING (HVAC - ET)	*COMMONWEALTH ROOM, LEAD – ANTONIO BOUZA*
2:00	Compressor is a Sensor (CRADA Emerson) ***Zhenning Li***
2:30	Low-Global Warming Potential Refrigerant Leak-Sensing Methods for Commercial Refrigeration (CRADA Emerson) ***Praveen Cheekatamarla***
3:00	High-performance Lower-cost Plastic Heat Exchangers ***Pinakin Patel***

Special sessions denoted in GREEN TEXT.

Wednesday, April 26 (continued)

ENVELOPE — ***MADISON ROOM, LEAD – SVEN MUMME***

2:00	Development of Low-Cost VIP Core Materials Through Coupling Effect ***Som Shrestha***
2:30	Self-Healing Films to Improve Durability of VIPs by In-Situ Remediation of Film Defects ***Tomonori Saito***
3:00	Nanoporous Wood Chips Based Sizable, Robust, and Low-Cost Honeycomb Vacuum Insulation Panels ***Amy Gong***

BUILDING ELECTRIC APPLIANCES, DEVICES, AND SYSTEMS (BEADS) — ***WILSON/HARRISON ROOM, LEAD – WYATT MERRILL***

2:00	BEADS Introduction ***Wyatt Merrill***
2:15	Affordable and Equitable Residential Electrification Under Electrical Panel and Service Constraints ***Xin Jin***
2:40	BE-SATED: Building Energy Storage at The Edges of Demand ***Saul Griffith***
3:05	High-Fidelity Self-Learning Tool for Residential Load and Load Flexibility Forecasting ***Michael Zeifman***

ADVANCED BUILDING CONSTRUCTION (ABC) — ***JACKSON ROOM, LEAD – DALE HOFFMEYER***

2:00	Introduction to ABC and Industrialized Construction at BTO ***Amy Royden-Bloom***
2:10	New Construction Technologies ***Multiple speakers***

ENERGY EQUITY & ENVIRONMENTAL JUSTICE/ DIVERSITY, EQUITY, AND INCLUSION — ***POTOMAC ROOM, LEAD – MARIANA EGEA-CASALDUC***

2:00	Introduction ***Roderick Jackson***
2:10	Systems Technology Equity & Environmental Justice (ST-EEJ) National working Group – Overview and Guided Discussion ***Kate Hickcox***
2:50	Engaging Underserved Communities in Field Validations of Commercial Building Energy Efficiency Technologies ***Kelsea Dombrovski***

BUILDING ENERGY MODELING (BEM) — ***CAPITAL VIEW ROOM, LEAD – AMIR ROTH***

2:00	ASHRAE Standard 229P ***Supriya Goel***
2:30	Simplified PRM ***Supriya Goel***
3:00	URBANopt ***Tanushree Charan, Ben Polly***

Wednesday, April 26 (continued)

BREAK: 3:30-4:00 PM

Session 10. 4:00-6:00 PM

HEATING, VENTILATION, AND AIR CONDITIONING (HVAC - ET) — ***COMMONWEALTH ROOM, LEAD – ANTONIO BOUZA***

4:00	A Grid-Interactive Modulating Air Distribution Manifold ***Andrew Poerschke***
4:30	Cold Climate Heat Pump Water Heater Using Environment-Friendly Refrigerants (CRADA Rheem) ***Bo Shen***
5:00	Development of Next Generation Heat Pump Water Heater Deploying Newly Emerging Refrigerants (CRADA A.O. Smith) ***Kashif Nawaz***
5:30	RETRRAC (Retrofittable Efficiency Technology for Resilient Refrigeration with AI-based Controls) ***Jesse Thornburg***

ENVELOPE — ***MADISON ROOM, LEAD – SVEN MUMME***

4:00	Robotically and Autonomously Installed Wall Interior Spray Foam ***Mikael Salonvaara***
4:30	Real-Time Evaluator to Optimize Installation of Prefab Retrofit Panels ***Nolan Hayes***
5:00	Cool Surfaces Manhattan Project ***Ronnen Levinson***
5:30	Preinstalled Sealant for Prefab Components ***Zoriana Demchuk***

BUILDING ELECTRIC APPLIANCES, DEVICES, AND SYSTEMS (BEADS) — ***WILSON/HARRISON ROOM, LEAD – WYATT MERRILL***

4:00	Smart Electrical Panel Based HEMS (Span.io) ***Xin Jin***
4:25	Grid-Interactive, Resilient Lighting and Plug Load Management System Using DC Power ***Richard Brown***
4:50	A Behind-the-Wall DC Bus to Power Low Voltage DC Products ***Alan Meier***

ADVANCED BUILDING CONSTRUCTION (ABC) — ***JACKSON ROOM, LEAD – DALE HOFFMEYER***

4:00	Integrated Building Retrofits: Updates ***Multiple speakers***
4:55	Roundtable Discussion

Special sessions denoted in GREEN TEXT.

Wednesday, April 26 (continued)

ENERGY EQUITY & ENVIRONMENTAL JUSTICE/ DIVERSITY, EQUITY, AND INCLUSION — ***POTOMAC ROOM, LEAD – MARIANA EGEA-CASALDUC***

4:00	Efficient and Health Schools Campaign: Recruitment, Outreach Strategy, and National Schools DAC Map Tool – Overview and Discussion ***Sydney Applegate, Samuel Petty***
5:00	Driving Equitable Access to Energy Efficient, Zero Energy, and Zero Carbon Buildings in Underserved Communities ***Ardelia Clark, Rois Langner, Shanti Pless***

IBUILD — ***CAPITAL VIEW ROOM, LEAD – AMIR ROTH***

4:00	Dynamic Thermochromic Fenestration Elements Incorporating VO_2 Nanoparticles for Retrofitting Applications ***Jaime Ayala***
4:15	The Trade-Off Between Efficiency and Stability in Mn^{2+}-Doped Perovskite LEDs ***Sebastian Fernández***
4:30	Air Dehumidification with Vacuum-Driven Vapor Selective Membranes for Efficient Separate Latent Cooling ***Andrew Fix***
4:45	Verifying EnergyPlus for Cross-Laminated Timber Building Assemblies ***Gabriel Flechas***
5:00	Biomimetic Integrated Community Energy and Power Systems (BICEPS) ***Kathryn Hinkelman***
5:15	Lower Critical Solution Temperature Dehumidification and Refrigeration ***Jordan Kocher***
5:30	Exploring an Equitable Transition to Clean Heating in Cold Climates ***Claire McKenna***

END OF DAY

Special sessions denoted in GREEN TEXT.

Thursday, April 27

Session 11. 9:00-11:00 AM

HEATING, VENTILATION, AND AIR CONDITIONING (HVAC - ET)	*COMMONWEALTH ROOM, LEAD – ANTONIO BOUZA*
9:00	Evaluation of a Micro-Cascade System for Supermarket Refrigeration using Low GWP Refrigerants (CRADA Honeywell) ***Samuel Yana Motta***
9:30	Energy Efficient Refrigerated Food Processing and Dispensing Machines for Quick Service Restaurants and Food Retail (CRADA Taylor Company) ***Vishal Sharma***
10:00	Ice Storage for Efficient and Flexible Decarbonization of Hydronic Space Heating ***Jason Woods***
10:30	Ultra-Low GWP Refrigerants to Reduce Carbon Footprint in Data Centers (CRADA Chemours) ***Saad Jajja***

ENVELOPE	*MADISON ROOM, LEAD – SVEN MUMME*
9:00	Locating and Measuring Air Leakage Using Refractive Fluid Flow Imaging ***Philip Boudreaux***
9:30	Low-carbon, Recyclable, Biobased Foam Insulation ***Zoriana Demchuk***
10:00	High-Performance (R-10/ Inch) Clay-Cellulose-Silica Nanopore Insulation Board for New and Retrofit Buildings ***Arthur Yang***
10:30	Multi-Scale Simulations and Machine Learning-Guided Design and Synthesis of High-Performance Thermal Insulation Materials ***Bokyung Park***

BUILDING ELECTRIC APPLIANCES, DEVICES, AND SYSTEMS (BEADS)	*WILSON/HARRISON ROOM, LEAD – WYATT MERRILL*
9:00	TEDW ***Kyle Gluesenkamp***
9:20	TER: Dual-evaporator, Variable-capacity Refrigerator Coupled with Thermo-electric Freezer ***Bo Shen***
9:40	HERES: High-Efficiency Refrigerator with Cold Energy Storage Enabling Demand Flexibility ***Zhiming Gao***
10:00	ISO: Next-generation Domestic Refrigerator with Unprecedented Performance Using Isobutane as Refrigerant ***Kashif Nawaz***
10:20	CWD: Nex-generation Combined Water and Dryer Platform for Higher Efficiency and Fast Operation ***Xiaoli Liu***
10:40	RCO: Domestric Electric Oven Reimagined: Eco-Friendly Cooking Oven at Scale Using Recycled Reinforced Composites ***Ahmed Hassan***

Special sessions denoted in GREEN TEXT.

Thursday, April 27 (continued)

HEATING, VENTILATION, AND AIR CONDITIONING (HVAC – CBI, RBI) — ***POTOMAC ROOM, LEAD – MARC LAFRANCE***

9:00	Load Shifting with Heat Pump Water Heaters in the Southeast U.S. ***Josh Butzbaugh***
9:30	Juneau Heat Pump Deployment ***Vanessa Stevens***
10:00	No Vapor-compression, Electrochemical Looping Heat Pump (NOVEL HP) ***Davide Ziviani***
10:30	Demonstration of 120V Heat Pump Water Heaters in a Warm/Hot Climate ***Josh Butzbaugh***

COMMERCIAL BUILDING INTEGRATION (CBI) — ***CAPITAL VIEW ROOM, LEAD – HAYES JONES***

9:00	Impact of the Better Buildings Alliance Plug and Process Loads Technology Research Team ***Kim Trenbath***
9:30	Building Envelope Campaign ***Mahabir Bhandari***
10:00	Integrated Lighting Campaign ***Axel Pearson***
10:30	Efficient and Healthy Schools Campaign ***Cynthia Regnier***

BREAK: 11:00-11:30 AM

Session 12. 11:30 AM-1:00 PM

HEATING, VENTILATION, AND AIR CONDITIONING (HVAC - ET) — ***COMMONWEALTH ROOM, LEAD – ANTONIO BOUZA***

11:30	Flexible Heat Pump Water Heater with Embedded Energy Storage (CRADA A.O. Smith) ***Jian Sun***
12:00	High Efficiency Cold-Climate Integrated Heat Pump (CCIHP) ***Bo Shen***
12:30	Separate Sensible and Latent Air Conditioning System ***Kai Li***

ENVELOPE — ***MADISON ROOM, LEAD – SVEN MUMME***

11:30	Non-destructive Microwave Reflection-Based Moisture Detector for Durable Building Envelope Retrofits ***Philip Boudreaux***
12:00	Scale-Up Manufacturing of TABE Panels ***Daniel Howard***
12:30	Aerogel Production for Low-cost and High-R Insulation ***Je Kyun***

Thursday, April 27 (continued)

TECHNOLOGY-TO-MARKET (T2M) — ***WILSON/HARRISON ROOM, LEAD – NICHOLAS RYAN***

11:30	EPIC (Energy Program for Innovation Clusters) Syracuse ***Eric Schiff, Tamara L. Rosanio***

HEATING, VENTILATION, AND AIR CONDITIONING (HVAC – CBI, RBI) — ***POTOMAC ROOM, LEAD – MARC LAFRANCE***

11:30	Combination Heat Pump and Heat Pump Water Heater ***Edward Louie***
12:00	Dual Fuel Controls ***James Lyons***
12:30	Develop Field Test Methods and Analytical Techniques to Assess HVAC Fault Impacts and a Simplified Commissioning Method ***Jon Winkler***

COMMERCIAL BUILDING INTEGRATION (CBI) — ***CAPITAL VIEW ROOM, LEAD – HAYES JONES***

11:30	Space Conditioning BBA Technology Research Team: Energy, Health, and Environmental Performance in All Communities ***Marcus Bianchi***
12:00	Technology Analysis and Validation of Integrating Connected Grid-Interactive Flexible Building Loads, Lighting, Automated Shades, And Intelligent Energy Storage to Provide Grid-Interactive Flexible Building Loads ***Xiaohui Zhou***

LUNCH: 1:00-2:00 PM

Session 13. 2:00-3:30 PM

HEATING, VENTILATION, AND AIR CONDITIONING (HVAC - ET) — ***COMMONWEALTH ROOM, LEAD – ANTONIO BOUZA***

2:00	Novel Compact Flooded Evaporators for Commercial Refrigeration ***Kashif Nawaz***
2:30	Wrap Tank Heat Pump Water Heater with Wrap-tank Microchannel Condenser and Submerged Condenser Options (CRADA – Rheem) ***Ahmed Elatar***
3:00	Analysis of Frost Formation and Novel Defrost Techniques for Commercial Refrigeration Applications (CRADA Hillphoenix/Dover Food Retail) ***Pengtao Wang***

ENVELOPE — ***MADISON ROOM, LEAD – ERIC WERLING***

2:00	Hygrothermal Performance of New and Retrofit Residential Building Envelopes ***Andre Desjarlais***
2:30	Renew Wall ***Christine Liaukus***

Special sessions denoted in GREEN TEXT.

Thursday, April 27 (continued)

NATIONAL EMERGING TECHNOLOGIES COLLABORATIVE — ***WILSON/HARRISON/JACKSON ROOM, LEAD – CECILIA JOHNSON, NICHOLAS RYAN***

HEATING, VENTILATION, AND AIR CONDITIONING (HVAC – CBI, RBI) — ***POTOMAC ROOM, LEAD – MARC LAFRANCE***

2:00	Dalrada Commercial Heat Pump Validations (Lab and GSA buildings) ***Jian Sun***

BUILDING PERFORMANCE STANDARDS — ***CAPITAL VIEW ROOM, LEAD – JEREMY WILLIAMS***

BREAK: 3:30-4:00 PM

Session 14. 4:00-6:00 PM

HEATING, VENTILATION, AND AIR CONDITIONING (HVAC - ET) — ***COMMONWEALTH ROOM, LEAD – ANTONIO BOUZA***

4:00	Load Shifting with Heat Pumps ***Samuel Rosenberg***
4:30	Ultra-Clear Aerogels for Insulated Glass in Refrigeration Doors (CRADA AeroShield Materials) ***Cheng-Min Yang***
5:00	Smart Tools for Efficient HVAC Performance (STEP) Campaign ***Christian Valoria***

NATIONAL EMERGING TECHNOLOGIES COLLABORATIVE — ***WILSON/HARRISON/JACKSON ROOM, LEAD – CECILIA JOHNSON, NICHOLAS RYAN***

END OF DAY

Special sessions denoted in GREEN TEXT.

Friday, April 28

Workshop. 9:00-11:00 AM

NATIONAL EMERGING TECHNOLOGIES COLLABORATIVE

WILSON/HARRISON, JACKSON ROOM,
LEAD – CECILIA JOHNSON, NICHOLAS RYAN

BREAK: 11:00-11:30 AM

Workshop. 11:30 AM-1:00 PM

NATIONAL EMERGING TECHNOLOGIES COLLABORATIVE

WILSON/HARRISON, JACKSON ROOM,
LEAD – CECILIA JOHNSON, NICHOLAS RYAN

END OF DAY

Special sessions denoted in GREEN TEXT.

V. POSTER HALL LAYOUT

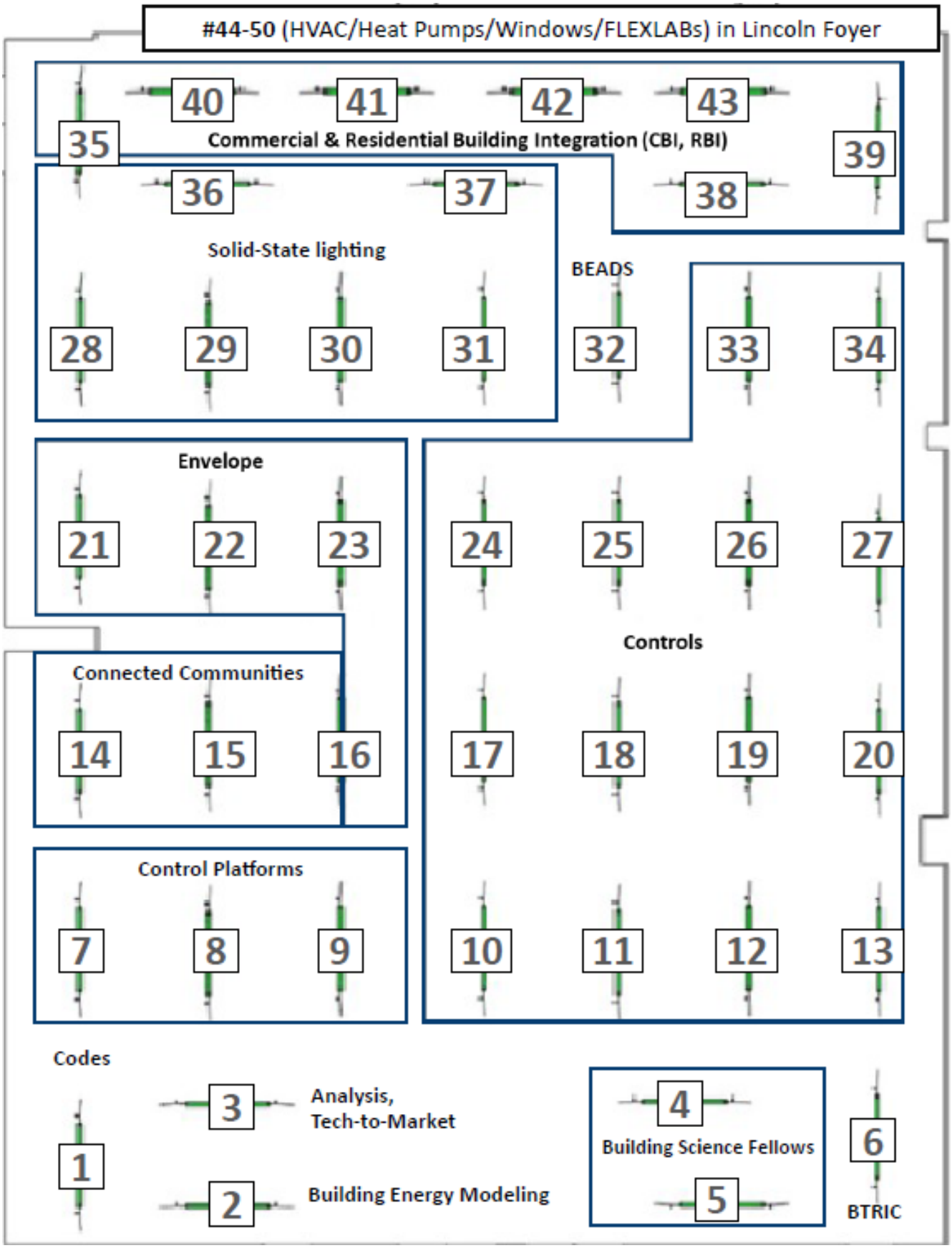

VI. POSTERS (full list)

TRACK	TITLE	PRESENTER	BOARD
Analysis	Demand Flexibility Benchmarking	Jingjing Liu	**3**
	Multi-Scenario Extreme Weather Simulator	Daniel Villa	
Tech-to-Market	AutoBEM CRADAs	Joshua New	
	TCFs: DER as a Service (Ecolong and VOLTTRON), Remote Deployment and Setup of VOLTTRON Instances (Intellimation and VOLTTRON)	Shwetha Niddodi	
Building Energy Modeling (BEM)	Empirical Validation of Building Energy Simulation	Piljae Im	**2**
	OCHRE: Object-Oriented Controllable High-Resolution Residential Energy Model	Jeffrey Maguire	
	BEMCyclopedia - Building Energy Modeling Training Resources	Cindy Regnier	
	Deep Design Data Portal (D3P) & AIA 2030 Design Data Exchange (DDx)	Cindy Regnier	
Codes	Building Performance Standards: Policy Movement	Billierae Engelman	**1**
	Building Energy Codes Technical Assistance	Kelly Gordon	
	Modular Multifamily Construction: A Field Study of Energy Code Compliance and Performance Through Offsite Prefabrication	Kevin Grosskopf	
	Residential Energy Code: Is Compliance Equitable?	Michael Tillou	
	Efficiency for Energy Resilience	Tianzhen Hong	**9**
Building Science Fellows	Carbon Capture and Storage Using Building Materials	Malavika Bagapalli	**4**
	Sustainability and Performance of Bio-Based Materials for Construction 3D-Printing	Katy Bradford	
	Lower Critical Solution Temperature (LCST) Materials Used for Solar-Powered Cooling	Jordan Kocher	
	Development of Phase-Change Material Composites for Thermal Energy Storage via Vat Polymerization	Isabel Melendez	
	Residential Human Behavior Modeling Approaches	Katherine Bassett	**5**
	Vapor Selective Membranes for Efficient Dehumidification: Materials and Systems	Andrew Fix	
	Biomimetic Integrated Community Energy and Power Systems (BICEPS)	Kathryn Hinkelman	
	Evaluation of System-Level Performance of Closed Thermochemical Energy Storage Systems for Space Heating	Kate Rivera	
BTRIC (Building Tech Research & Integration Ctr)	Innovative Energy Panel	Mahabir Bhandari	**6**
	Cellular Shades	Niraj Kunwar	
	Exterior Shades	Niraj Kunwar	
	Exterior Fixed Shading	Niraj Kunwar	
Control Platforms	ConStrain (Control Strainer): A Data-Driven Building Control Performance Verification Framework	Yan Chen	**7**
	ASHRAE 229P	Supriya Goel	
	Equitable Reference Development and Deployment Platform (VOLTTRON)	Jereme Haack	
	Benchmarking Smart Thermostats for Multifamily and Small/Medium Commercial Buildings	Jermy Thomas	
	Open Building Control	Paul Ehrlich	**8**
	Deep Decarbonization Scenarios for U.S. Buildings Highlight the Importance of Demand-Side Efficiency Deployment	Chioke Harris	
	Alfalfa: Virtual Building Service	Tobias Shapinsky	
	Spawn/Modelica Buildings Library	Michael Wetter	
	Power Integrations CRADA	Daniel Gerber	**9**
	Sensor Data Integration	Tianzhen Hong	
	Smart Thermostat Specifications	Alan Meier	

TRACK	TITLE	PRESENTER	BOARD
Controls (continued on next page)	Benchmark Buildings Datasets	Tianzhen Hong	**10**
	Fault Detection and Diagnostics: Test Datasets and Prioritization Methods	Piljae Im	
	A Low-cost, Scalable Control Solution for Grid-Interactive Small and Medium Sized Commercial Buildings	Donghun Kim	
	Electric Panel Survey	Alan Meier	
	Develop and Disseminate Interoperability Standard	Avijit Saha	**11**
	Virtual Control Testing and Evaluation	David Blum	
	Adaptive Cyber-Physical Resilience for Building Control Systems	Draguna Vrabie	
	Comprehensive Pliant Permissive Priority Optimization	Draguna Vrabie	
	Federated Architecture for Secure and Transactive Distributed Energy Resource Management Solutions (FAST-DERMS)	Annabelle Pratt	**12**
	GMLC 2.4.2 Multi-Port	Jamie Lian	
	Time-Sensitive Value Calculator: User-Requested Advances	Margaret Pigman	
	Behind the Meter (BTM) Analysis	Matt Mitchell	
	Open Data for Building Performance Innovation	Armando Casillas	**13**
	Fault Prevalence in Commercial Buildings	Armando Casillas	
	Accelerating Optimal Fault-Free Control	Armando Casillas	
	Rapid, Low-Cost, Dynamic Commissioning and Integration of Sensors	Mahabir Bhandari	
	Assessing Equity and Affordability for Efficiency and DER Programs	Natalie Mims Frick	**17**
	GMLC 4.2.4 Distribution Plan	Natalie Mims Frick	
	GMLC 4.2.5 Grid-Interactive Efficient Buildings Technical Assistance	Natalie Mims Frick	
	NASEO-NARUC: Overview of GEB Working Group	Rodney Sobin	
	Learning-Driven Scalable Configurable Control Strategies for SMCB	Helia Zandi	**18**
	Smart Neighborhoods Research & Field Verification	Helia Zandi	
	TVA-ORNL Bidirectional EV Charging for Building Benefit	Helia Zandi	
	Scalable Load Management Using Reinforcement Learning	Helia Zandi	
	Energy Efficiency and Demand Flexibility State-Level Potential	Matt Leach	**19**
	ARIES: Capabilities Overview	Roderick Jackson	
	Multi-objective Deep Reinforcement Learning for Grid-Interactive Efficient Building	Rohit Chintala	
	Target Efficiency and Demand Flexibility to Reduce Electrification Peak Demand for Small and Mid-Size Cities	Sean Murphy	
	Using Structure Threat for Better Cybersecurity from GLMC-Deep Learning Malware	Meng Yue	**20**
	Building Intelligence with Layered Defense Using Security-Constrained Optimization and Security Risk Detection (BUILD-SOS)	Qun Zhou	
	Finding Malicious Code in Firmware from GLMC Firmware Command and Control	Rita Foster	
	Adaptive Cyber-Physical Resilience for Building Control Systems	Subhrajit Roychowdhury	
	Sensors and Controls Cost Analysis	Michael Deru	**24**
	Hot, Cold, or Just Right? Using a Wide-view Infrared Biometric Sensor to Improve Occupant Comfort and Reduce Overcooling in Buildings via Closed-loop Control	Ronnen Levinson	
	Understanding the Human Element in Advanced Roof-Top Unit Controls Adoption	Ruth Taylor	
	Compressor is a Sensor (CRADA Emerson)	Zhenning Li	

TRACK	TITLE	PRESENTER	BOARD
Controls (continued from previous page)	GMLC 2.5.2 Energy Services Interface	Rich Brown	**25**
	Equity-Focused Control Solutions for Affordable, All-Electric Multifamily Housing (foresee)	Xin Jin	
	Smart Community Design and Control for Enhanced Efficiency and Resilience	Xin Jin	
	Machine-Learning-Driven, Site-Specific Weather Inference for Building Energy Forecasting	Xin Jin	
	Dynamic Decarbonization Through Autonomous Physics-Centric Deep Learning and Optimization of Building Operations	Aaron Tuor	**26**
	SPIA: Flexible Loads	Ella Zhou	
	Automated and Continual Commissioning of Building Energy Management Systems	Marco Pritoni	
	Co-Design of HVAC Systems, Controls, and Sensing for Energy-Flexible Buildings	Veronica Adetola	
	Advancing Market-Ready Building Energy Management by Cost-Effective Differentiable Predictive Control	Jan Drgona	**27**
	Scaling of Building Transactive Control and Coordination to Support Grid Operations	Srinivas Katipamula	
	Development and Validation of Low-Cost, Interoperable, User-Centric, Supervisory Controller Kit for Small and Medium Size Commercial Buildings	Srinivas Katipamula	
	Autonomous Energy Management Software System for Small Commercial Buildings in Support of Decarbonization	Srinivas Katipamula	
	Connected Loads - Grid Connected Appliances	Jian Sun	**33**
	Advanced Building Controls for Airports	Korbaga Woldekidan	
	Airport Electrification Through Advanced Controls for Buildings and Electric Vehicle Charging	Korbaga Woldekidan	
	Securing Grid-Interactive Efficient Buildings (GEB) Through Cyber Defense and Resilient System (CYDRES)	Zheng O'Neill	
	Valuation Framework to Capture Co-Benefits of Energy Efficiency and Demand Response	Andrew Satchwell	**34**
	Transactive-Control-Based Connected Home Solution for Existing Residential Units and Communities	Michael Brambley	
	Sensor Suitcase	Michael Brambley	
	Get K-12 Ready for Future Utility Tariff Changes and Aggressive Carbon Reduction Requirements: Wholistic Control Package	Sang Woo Ham	
Connected Communities	Utility Managed Distributed Energy Resources Intelligent Community (UDERMS)	James Campbell	**14**
	Advanced Clean Communities Collaborative (AC3)	Andrew Poerschke	
	Connected Communities - National Coordinator 1	Cindy Regnier	
	Connected Communities - National Coordinator 2	Cindy Regnier	
	Spokane Connected Communities Project: Advancing a New and Scalable Business Model Which Demonstrates a Mutually Beneficial Framework for the Grid, the People it Serves, and the Built Environment	Easan Drury	**15**
	Evaluating Transactive Energy for Rural America	Seth Hoedl	
	SmartGrid Advanced Load Management & Optimized Neighborhood (SALMON)	Timothy Treadwell	
	Connecting Communities for Sustainable Solutions	Joe Zhou	
	Gateway Cities Unplugged: (em)Powering Affordable Housing	Christina McPike, Darien Crimmin	**16**
	DESIRED – Deep Efficiency and Smart Grid-Integrated Retrofits in Disadvantaged Communities	Siva Sankaranarayanan	
BEADS (Building Electric Appliances, Devices, and Systems)	High-Fidelity Self-Learning Tool for Residential Load and Load Flexibility Forecasting	Hannah Fontenot	**32**
	Grid-Interactive, Resilient Lighting and Plug Load Management System Using DC Power	Rich Brown	
	BE-SATED: Building Energy Storage at the Edges of Demand	Saul Griffith	
	Affordable and Equitable Residential Electrification Under Electrical Panel and Service Constraints	Xin Jin	

TRACK	TITLE	PRESENTER	BOARD
Opaque Envelope	Fire Resilient, Affordable Housing and Manufactured Homes	Diana Hun	**16**
	Self-Healing Sealants for Building Envelopes	Diana Hun	
	High Filler, Low Water: A Low Carbon Concrete Technology	Denise Silva	**21**
	Cost-Effective Thermally Activated Building Systems to Support a Power Grid System with High Penetrations of As-Available Renewable Energy Resources	Jialai Wang	
	Scalable and Cost-Effective Roll-to-Roll Additive Manufacturing of Highly Durable Silica Aerogel Building Insulation	Shenqiang Ren	
	Energy-Efficient, Low Embodied Carbon, Hemp-Based Materials for Building Envelope Applications	Tommy Gibbons	
	Fast, Accurate, and Reliable Thermal Metrology to Assess the Thermal Resistivity on Small Samples of Thermal Insulation	Andre Desjarlais	**22**
	Developing a Database of Bio-based Materials Used in Building Envelope Applications	Andre Desjarlais	
	Energy Savings Potential of Buildings Constructed with Mass Timber: Combining Established and Novel Methods of Monitoring Energy Reduction Potentials	Mikael Salonvaara	
	Machine-Learning (ML) Assisted Low-Carbon Building Material Development and Integration Tool	Mikael Salonvaara	
	Lightweight and Thermally Insulating Nanowood	Jiaqi Dai	**23**
	IEA EBC Annex 80 Resilient Cooling Support	Ronnen Levinson	
	Facer Barriers for Aged Foam Boards with ≥R8/in	Som Shrestha	
	Models to Evaluate and Guide the Development of Low Thermal Conductivity Materials for Building Envelopes	Som Shrestha	
Solid-State Lighting (continued on next page)	Validating and Demonstrating GUV In-Field Performance	Belal Abboushi	**28**
	Comparing the Effectiveness, Energy Use, and GHG Emissions of Measures to Reduce the Spread of Airborne Pathogens	Cary Faulkner	
	Polariton Enhancement of the Purcell Effect for Extending Blue PHOLED Lifetime	Haonan Zhao	
	Testing Commercially Available GUV Products	Jason Tuenge	
	Lighting System Field Demonstrations in Workplaces	Andrea Wilkerson	**29**
	Lighting System Field Demonstrations in Healthcare Facilities	Andrea Wilkerson	
	Lighting System Field Demonstrations in Classrooms	Andrea Wilkerson	
	Cadmium-Free Quantum Dot Building Blocks for Human Centric Lighting	William Zhang	
	Optimizing Tunable Lighting for Human Health	John Hanifin	**30**
	Addressing Flicker in Lighting to Prevent Harm to Building Occupants	Michael Royer	
	Towards Effective Discomfort Glare Metrics	Michael Royer	
	Optimizing Light Source Spectrum to Increase Efficiency and Improve Wellbeing	Michael Royer	
	Solutions to Droop and the Green Gap by Novel Carrier Injection	James Speck	**31**
	Using Observational Research to Understand Technology Deployment Barriers	Ruth Taylor	
	Solutions to Connected Lighting System Performance Issues	Ruth Taylor	
	Improvements to High-Resolution Spectral Simulation Tools for Daylight and Electric Light	Sarah Safranek	
	L-Prize Drives Next Generation Lighting for Commercial Buildings	Gabe Arnold	**35**
	High Aspect Ratio OLEDs	Chris Giebink	**36**
	Low Refractive Index OLEDs for Practical High Efficiency Outcoupling	Dorukalp Dumus	
	Microassembly Printer for LED Lighting and Beyond	Eugene Chow	
	Blue and Green Phosphorescent Emitters with Short Radiative Lifetimes and Their OLEDs	Jonas Schaab	

TRACK	TITLE	PRESENTER	BOARD
Solid-State Lighting (continued from previous page)	Lossless Beam-Width Adjustment with Low-cost Mechanics	Chris Gladden	**37**
	Characterizations of Materials and 3D-Printed LED Secondary Optics for General Illumination	Jean Paul Freyssinier	
	Sustainability and Life Cycle Assessment of Electrical Products	Kate Hickcox	
	Microprinting Waveguides for Ultra-Thin and Flexible LED Lighting Panels	Sergiy Vasylyev	
Commercial & Residential Building Integration (CBI, RBI) (continued on next page)	Integrated Lighting Campaign	Axel Pearson	**35**
	The Integration of Wi-Fi Location-Based Services (LBS) to Optimize Energy Efficient Commercial Building Operations	Lester Shen	
	Scaling Efficiency and Efficient Electrification Building Upgrades	Kassandra Grimes	
	AI-Enabled IoT-Based Platform to Deliver Energy Efficiency and Grid Services for Commercial Buildings	Robert Lutes	**38**
	Field Validation Simple Retrofit Commercial Building Controls: Sidewalk Labs Mesa	Michael Myer	
	Performance Demonstration of an Occupancy Sensor-Enabled Integrated Solution for Commercial Buildings	Gang Wang	
	A Simple Control Score for Evaluating Building Control Performance	Tim Yoder	
	Increasing the Adoption of Very High Efficiency (Heat Pump) Technology	Dan Golden	**39**
	Field Validation of Variable Refrigerant Flow System Performance in Cold Climates	David Korn	
	Next Level Energy Savings with Very High Efficiency HVAC Systems	Tim Yoder	
	Technology Analysis and Validation of Integrating Connected Grid-interactive Flexible Building Loads, Lighting, Automated Shades, and Intelligent Energy Storage to Provide Grid-Interactive Flexible Building Loads	Xiaohui Zhou	
	Systems Technology Energy Equity and Justice Working Group	Kathryn Hickcox	**40**
	ENERGY STAR MIE Product Category - Better Buildings Healthcare Sector Partner Outreach & Sub Metering Studies	Amy LeBar	
	Small/Light Commercial Buildings Energy Equity Engagement	Ebony Mayhorn	
	Heat Pump Strategies in Underserved Communities	Ebony Mayhorn	
	A Methodology for Defining Affordability in Commercial Buildings and its Impact on Underserved Communities	Ardelia Clarke	**41**
	Working with Trusted Local Organizations to Address Barriers that Impede Access to Cost-Effective, Holistic, Building Performance Improvements	Ardelia Clarke	
	Overlapping Value Streams that Support Underserved Community and Utility Needs	Rois Langner	
	Supporting Minority-Focused Developer Incubator Programs for, and Within, Underserved Communities	Shanti Pless	
	Supporting the Growth of a Skilled Workforce in the Building Energy Efficiency Industry	Cynthia Finley	**42**
	Home Energy Score Updates	Noel Merket	
	Summary of Advanced Building Construction (ABC): Integrated Building Retrofits	Tyler Pilet	
	Better Climate Challenge - Emissions Reduction Planning Framework	Jordan Wilkerson	
	LBNL: Data and Tools Overview	Joshua Kace	**43**
	PNNL Data and Tools Overview	Juan Gonzalez	
	NREL Data and Tools Overview	Nicholas Long	
	Field Validations of HVAC Dehumidification Systems: Altaire & Conservant	Wale Odukomaiya	

POSTERS IN LINCOLN FOYER

TRACK	TITLE	PRESENTER	BOARD
CBI, RBI (continued from previous page)	Ecosizer, a Tool for Sizing Central Water Heating System, Development, and Upgrades	Ahmed Elatar	**44**
	Integrated Efficiency and IAQ Retrofit Packages for K-12 and Commercial Utility Programs	Cindy Regnier	
	FLEXLAB - Recent Projects at DOE's Integrated Building and Grid Services Test Facility at Berkeley Lab	Cindy Regnier	
HVAC/Windows	Liquid Piston with Spray Cooling Near Isothermal Compressor	Stephen Kowalski	**45**
	Heat Pump Water Heater Installation	Cheryn Metzger	
	Heat Pump Decision Tools	Alek Parsons	
	Heat Pump Water Heater Decision Tools	Alek Parsons	
	Low-Cost, High-Performance Polymer Composite Heat Exchangers Manufactured by Additive Manufacturing	Kai Li	**46**
	High Power Density Magnetocaloric and Elastocaloric Systems	Julie Slaughter	
	Highly Efficient Microemulsion-Based Absorption Chillers for HVAC Application	Bao Yang	
	Stress and Fatigue of High Performance, Reduced Charge Heat Exchangers	Mingkan Zhang	
	Smart Frost Sensor for HVAC Frost Diagnostics and Defrosting Control	Zhiming Gao	**47**
	Demand Flexibility with Dynamic Facades	Christoph Gehbauer	
	Liquid Piston with Spray Cooling Near Isothermal Compressor	Stephen Kowalski	
	Adaptable - A High Efficiency Vacuum Insulated Panel Modular Building System	Vanessa Stevens	
	Cast Heat Exchanger Using the Novel Aluminum-Cerium Alloy	Jamieson Brechtl	**48**
	Ionic Fluids as Novel Lubricant Additives for HVAC Compressors for Enhanced Efficiency and Durability	Jun Qu	
	Commercial Space Cooling/Direct Air Capture System with Waste Heat Utilization	Kashif Nawaz	
	MaxTech Heat Pump Water Heater Using Ultra-Low GWP Refrigerants (CRADA A.O. Smith)	Kashif Nawaz	
	Heat Exchanger Solutions for High Glide Refrigerants <150 GWP	Cheng-Min Yang	**49**
	Adhesive Bonding of Aluminum and Copper in HVAC&R Applications	Vishal Sharma	
	Impact of Refrigerant Leaks from Zeotropic Refrigerant-Based Commercial Refrigeration Systems	Vishal Sharma	
	System Design Modelling and Evaluation of Low-GWP Refrigerant-Based Fry Dispenser for Quick Service Restaurants (CRADA Taylor)	Vishal Sharma	
	Novel Heat Exchanger Design Based on Porous Materials (CRADA Baltimore Air Coil)	Brian Fricke	**50**
	Next Generation Transcritical CO_2 Refrigeration System	Brian Fricke	
	Technical Support for the IEA Heat Pump Annex 54: Heat Pump Systems with Low GWP Refrigerants	Brian Fricke	
	Thermoelectric Heat Pump Water Heater Priced for Mass Market Deployment with 30% less CO_2 (CRADA A.O. Smith)	Kyle Gluesenkamp	

POSTERS IN MADISON ROOM (only on 4-6 PM, TUESDAY, APRIL 25)

TRACK	TITLE	PRESENTER	BOARD
IMPEL*	LATCHES: A Novel Envelope Thermal Management System	Shantonio Birch	**NA**
	ecoLong's Community Virtual Power Plant	Judy Min	
	Fully Electric Fully Autonomous Buildings in Underserved Communities	Thomas Hunter	

* This session may feature additional posters.