Pascua Yaqui Tribe Energy audit final report:

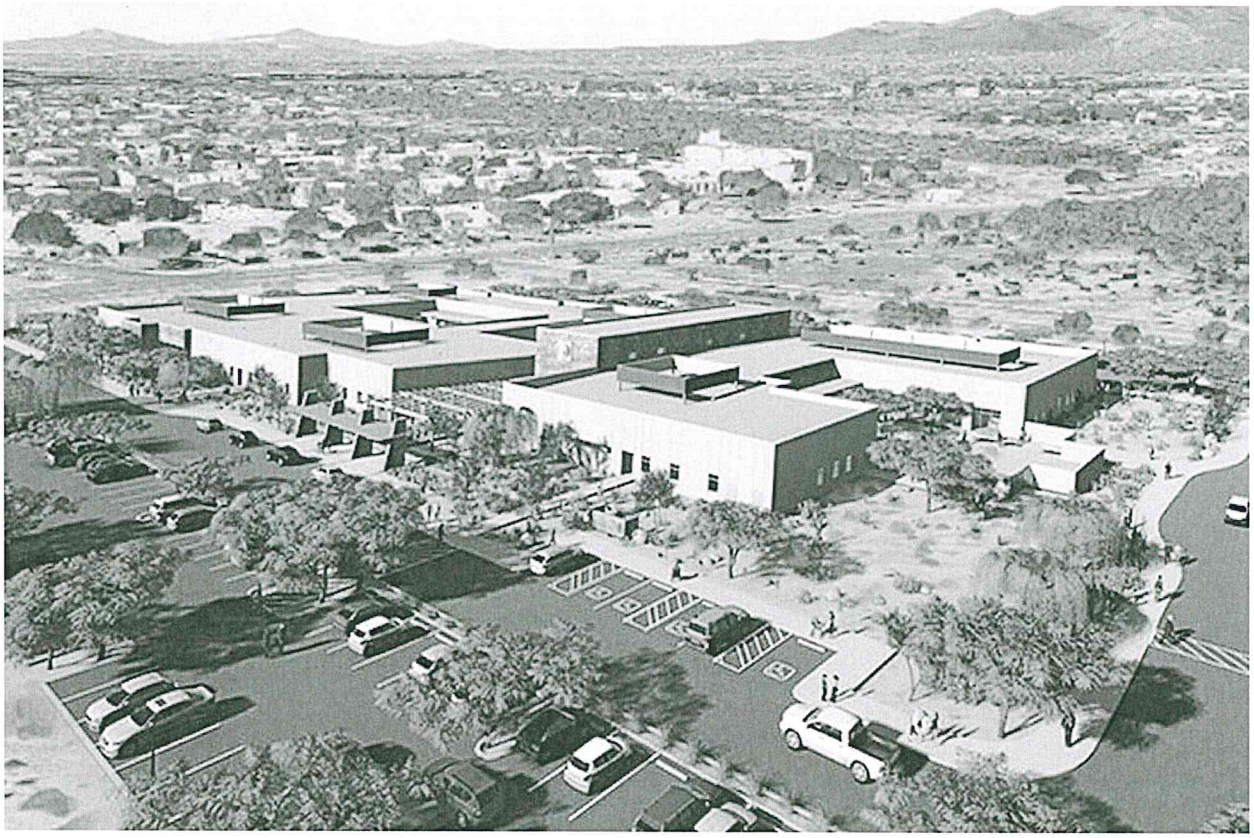

EXECUTIVE SUMMARY

The Pascua Yaqui Tribe has the goal of reducing energy use and costs in its government facilities and housing. In a proactive effort to meet the Tribe's needs an energy audit was performed to accomplish the following goals:

* Develop an energy efficiency implementation strategy.

* Prepare an energy audit to identify cost-effective energy efficiency opportunities.

* Plan and conduct a level II energy audit in tribal government buildings and tribal housing.

The audit encompassed four tribal government buildings and a group of residential structures. The purpose of this project was to assess the various facilities energy use in order to inform a means to lower annual consumption. An evaluation of each facility's historical energy and major energy-consuming equipment was performed, and energy conservation measures (ECM's) were identified. An average of 4 ECM's where recommended for each facility. If each facility's recommended ECM's are implemented, the average calculated yearly benefits to the government and residential buildings would result in a 48.3% reduction in electrical energy/costs savings and a 14.4% reduction in natural gas energy/costs savings.

Recommended projects for implementation include: Interior Lighting Upgrade, Exterior Lighting Upgrade, Solar Pool Covers, Retro-Commissioning, Low Volt Fixtures, Plug Load Management System, Occupancy Sensor Control, and Solar PV for government/casino buildings and appliance, window, HVAC, Weather Stripping, and water heaters replacement in residences.

TABLE OF CONTENTS

Cover Sheet..... page 1

Executive Summary..... page 2

Table of Contents..... page 3

Project Overview..... page 4

Project Objectives..... page 4

Description of Activities Performed..... page 5 - 6

Conclusions and Recommendations..... page 6

Lessons Learned..... page 7 - 8

Education Center Energy Audit Final Report..... 39 pages

Education Center ECM Specifications..... 41 pages

Health Building Energy Audit Final Report..... 39 pages

Health Building ECM Specifications..... 63 pages

Justice Center Energy Audit Final Report..... 42 pages

Justice Center ECM Specifications..... 63 pages

Sun Casino Energy Audit Final Report..... 44 pages

Sun Casino ECM Specifications..... 146 pages

Wellness Center Energy Audit Final Report..... 53 pages

Wellness Center ECM Specifications..... 46 pages

Residential Energy Audit Final Report..... 39 pages

Residential ECM Specifications..... 188 pages

DOE 2018 Energy Program Review Presentation..... 12 pages

Appendix – Housing List..... 10 pages

PROJECT OVERVIEW

- The Pascua Yaqui Tribe (PYT) Energy Audits determined to what extent the Tribe can reduce its energy consumption through implementing energy efficiency measures (EEMs) identified by the energy audits.

PROJECT OBJECTIVES

1. To develop an Energy Efficiency Action Plan
    1. Determine where greatest Energy Efficiency Measures (EEM's) can be made
    2. Determine where shortest pay-back energy improvements can be made
    3. Prioritize list of Energy Efficiency Improvements, based on pay-back criteria
2. Complete Pascua Yaqui Tribe Energy Efficiency Action Plan
    1. With next steps to complete energy goals
    2. Includes summary of audited buildings current use with recommendations for low cost EEM's based on historical energy use.
    3. Includes LEED standards for new building construction

DESCRIPTION OF ACTIVITIES PERFORMED

Evaluations of three government buildings, a small casino, and residential properties have been performed. Please see the energy audits and specifications included herein. Utility data was collected for each site and includes annual expenditure for the twelve month period of January 2017 to December 2017.

Subsequently, energy conservation measures (ECM's) where recommended for each facility, and estimates of benefits were provided in regards to annual reductions of usage and potential cost savings.

The attached reports provide a description of each facility, analysis of energy consumption, summary of the potential savings by system, description of each ECM, and a list of operations and maintenance observations.

Audits covered assessment of energy use in order to inform means to lower annual consumption. Evaluations of facilities historical energy consumption and major energy consuming equipment was performed to identify ECM's.

Reports summarize estimated savings and implementation costs for the ECM's identified.

A description of each measure is presented in the reports. The power and gas usage and cost savings, implementation cost, simple payback, and associated greenhouse gas (GHG) emissions reductions have been calculated for each measure. The values are summarized in tables in the individual reports.

The audits identify conservation opportunities to achieve cost savings and reduce emissions. Operations and maintenance benefits may also be realized as a result of the process.

During site visits, interviews with home owners, facility staff and visual inspections were conducted for all major mechanical and water consuming equipment. In addition, a topical review of equipment control systems was performed to identify energy, operations and maintenance, and indoor quality issues. This included review of HVAC equipment sequences of operation, set points, and time schedules.

Engineering contractor's applied energy engineering design principles and industry standards to calculate ECM savings using spreadsheet-based energy models of the systems being analyzed. The energy models compared existing usage baseline data to energy usage after implementation of ECM's. The proposed conditions take into account interactive effects of other measures to insure measured savings are not duplicated.

Represented photos and descriptions of equipment analyzed are included in the studies. Historical consumption includes a summary of utility rates used in the analysis of each facility. Energy Use Intensity and distribution of energy use by system is included.

Energy cost savings calculations for the ECM's were based on building electric and gas costs experienced by each facility for the calendar year 2017 and summarized in tables within the reports. Weather data is provided to facilitate year over year comparisons.

Electrical consumption is demonstrated on graphs showing data from January 2016 to December 2017. Commentaries on Electrical consumption are provided in the various reports, including load factor calculations.

Natural gas consumption data is represented, and consumption for heating and cooling is demonstrated. Consulting Energy Engineers calculated Energy Use Intensity (EUI) for heating and cooling usage and floor area. The calculated EUI evaluation period was for year 2017, and was used as a baseline for each report and presented in demonstrative Tables.

Due to differences in utility rates, the annual cost distribution differs from the annual usage distribution. For CY 2017, the total cost of electricity was higher than gas. Buildings use electric and gas to meet end-use energy requirements. The report engineers estimated the distribution of the energy usage by system, using the 2017 data. The distribution is based on mechanical equipment lists, lighting fixture counts and wattages, monthly utility data, process equipment lists, production schedules, operational hours and engineering analysis. The energy usage distribution by system on a per BTU basis is presented in pie graphs and tables within each buildings report.

Finally, summaries of potential performance indicators and proposed savings are shown in the form of graphs and tables. Key performance indicators summarize the potential savings associated with implementing all the ECM's. These Key Performance Indicators (KPI'S) are shown as existing and proposed annual cost per square foot of floor area.

CONCLUSIONS AND RECOMMENDATIONS

Evaluation Engineers recommend replacing all interior linear and compact fluorescent lamps with LED lamps. Reducing interior lighting consumption will reduce cooling costs.

Evaluation engineers recommend installing low flow fixtures. Low flow fixtures use less water and can save on gas used to heat hot water. Low flow urinals or waterless urinals can be used although they require more maintenance. Existing facets are to be replaced with 0.5 GPM faucets.

Exterior light upgrades can be done using LED replacements. LED's provide energy savings and long lamp life, leading to reduced maintenance and replacement cost. Energy engineers recommend replacing pole mounted lights with LED shoebox fixtures with integrated photocells. Wall pack applications can be replaced with 12 watt LED wall pack fixtures.

Existing interior lighting manual switches can be replaced with dual technology occupancy sensors where identified in the various reports. Interactive effects assume the sensors would need to be used in combination with interior lighting upgrades. Reducing interior lighting consumption via occupancy sensors will reduce building cooling load as well as increase heating load. Interact effects are shown in the various reports Economic Summary tables presented.

Retro-Commissioning is suggested by the Energy Report engineers. Energy savings could be realized by changing thermostat adjustments to match building occupancy. Installing locked boxes over thermostats insure they do not get changed by accident.

Adding Demand Controlled Ventilation (DCV) to measure CO2 level and adjust outside air fan speeds/dampers would result in energy savings during unoccupied or low occupancy periods.

Energy engineers recommend Retro-Commissioning studies on the government and small casino HVAC systems for the energy savings and short-term payback. Improvements in performance, reliability, indoor air quality, thermal comfort, and maintenance expenditures are the positive results gained.

Energy Engineer reports recommend performing a feasibility study to install solar panels on some of the flat roof buildings to offset electricity usage. Potential layouts are presented in some of the building Energy Audit reports herein.

LESSONS LEARNED

Basically, evaluations of the government and Casino buildings progressed rather smoothly. The residential evaluations were a little trickier. The energy engineer collected energy data for the selected residences. This included an audit of Tribal residences and a baseline energy study. As a Tribal Government representative, I escorted the vendor, Rock Gap's field consultant NORESCO, on site visits from November 5th through the 15th. NORSECO conducted site visits for completing the audit goal of up to 100 Pascua Yaqui residential dwellings. During the audit, NORESCO endeavored to access 100 houses, approaching over 150 homes during the two week engagement in order to complete the assessments. However, access was provided to only twenty eight (28) homes. When we asked folks why NORESCO could not complete the audits, the following reasons or conditions were given by the residents.

1) Don't have time, have to leave, or it was a relative's house and they were just living there.
2) Will the Tribe pay for retro-commissioning measures implementation? If not, what is the point? We explained this grant was just to provide the audit and recommendations, but it was possible follow-up funding could be secured to help pay for part or all of the implementations.
3) Why didn't Tribe respond to earlier home owner repair requests? Of which, most had nothing to do with energy measures.

The majority of responsive participants were elders and retired folks that typically took better care of their homes and yard areas.

Notwithstanding, NORESCO felt that after reviewing more than 150 homes, that the inspected locations constituted a representative sample of all the residential spaces and the energy cost measures (ECM's) identified can be found across the entire population of residential spaces.

Further, the ECM costs and implementation costs are reflective of the twenty eight (28) homes sampled during the site visit, and was compiled into a useful summary of energy conservation and retro-commissioning measures analysis.

While a reasonable assessment ultimately was concluded, we may want to try a different approach in the future. Perhaps identifying Elder owned units and/or contacting home ahead of time, to set up appointments. Offer incentives to member home owners like providing LED bulbs or appliance discounts, etc., and be prepared to provide member home owners information on other Tribal help programs, even if not directly related to energy auditing. Also, try doing the surveys when member owners are more likely to be home, such as weekends or evenings.

On the government buildings, we learned that follow up with the final reports with Tribal Directors is valuable. In the case of the Health Center, our FM department is already in the

process of taking some of the "low hanging fruit" ECM's, by proving replacement of exist lighting to LEDs at the Health Directors request.

ROCK GAP
Energy Services

[redacted]

[redacted]

[redacted]

[redacted]

[redacted]

[redacted]

[redacted]

[redacted]

[redacted]

New Mexico
3737 Princeton St NE, Ste 100, Albuquerque, NM 87107
T: (505) 344.2366 ◆ F: (505) 213.0563

Arizona
1921 S. Alma School Road Ste. 212, AZ 85210
T: (480) 834.5717 ◆ F: (480) 834.5718

Table of Contents

Executive Summary 3

1.0 Introduction 5

2.0 Facility Description 9

3.0 Historical Energy Consumption Analysis 12

4.0 Summary of Potential Energy Savings by System 21

5.0 Energy Conservation Measures 27

6.0 Measures for Future Consideration 34

7.0 Measures Not Feasible 37

8.0 Operations and Maintenance Measures 38

9.0 Next Steps 39

APPENDICES

Appendix 1 Calculations and Cost Estimates

E[illegible]

[illegible] [illegible] [illegible] [

[redacted] [redacted] [redacted] [

[redacted] I[redacted]

I[redacted] GA[redacted] E[redacted] C[redacted] E[redacted] C[redacted] E[redacted] A[redacted] ECM[redacted]

[redacted] E[redacted] C[redacted] M[redacted]

[redacted] E[redacted] C[redacted] M[redacted] (ECM[redacted])

A[redacted] (GHG[redacted])

[illegible]

[illegible]

ECM #	[illegible]	[illegible]	[illegible]	[illegible]	[illegible]	[illegible]	[illegible]	[illegible]	[illegible]	[illegible]	[illegible]	[illegible]	[illegible]	[illegible]
[illegible]	[illegible]	[illegible]	[illegible]	[illegible]	[illegible]	[illegible]	[illegible]	[illegible]	[illegible]	[illegible]	[illegible]	[illegible]	[illegible]	[illegible]
[illegible]	[illegible]	[illegible]	[illegible]	[illegible]	[illegible]	[illegible]	[illegible]	[illegible]	[illegible]	[illegible]	[illegible]	[illegible]	[illegible]	[illegible]
[illegible]	[illegible]	[illegible]	[illegible]	[illegible]	[illegible]	[illegible]	[illegible]	[illegible]	[illegible]	[illegible]	[illegible]	[illegible]	[illegible]	[illegible]
[illegible]	[illegible]	[illegible]	[illegible]	[illegible]	[illegible]	[illegible]	[illegible]	[illegible]	[illegible]	[illegible]	[illegible]	[illegible]	[illegible]	[illegible]
	[illegible]	[illegible]	[illegible]	[illegible]	[illegible]	[illegible]	[illegible]	[illegible]	[illegible]	[illegible]	[illegible]	[illegible]	[illegible]	[illegible]

Savings Summary	Energy Cost ($/yr)	Electric (kWh/year)	Electric Demand (kW)	Natural Gas (therms/year)	Mg CO2-e (metric tons)
Savings	$26,476	272,673	42	(186)	128
Annual Use	$101,404	836,720	229	580	399
% Reduction	**26.1%**	**32.6%**	**18.3%**	**-32.1%**	**32.1%**
New Annual Use	$74,928	564,047	187	766	271
Cost savings by fuel		$17,724	$8,904	-$151	

[illegible] Factors

Utility	Energy Conversion		GHG Emissions	
	Unit	to Btu	Mg (Metric Tons)	Unit
Electric	kWh	3,412	0.0004734	CO2e/kWh
Natural Gas	therm	100,000	0.0053060	CO2e/therm

EXECUTIVE ACCESS

[illegible] [illegible] [illegible] [

-

 C E A C E

D

 E A C M E C M I D E

E A C E M E A E C M E A E C M E A E C

[redacted] F[redacted] D[redacted]

[redacted]

[redacted] B[redacted] D[redacted]

[redacted] E[redacted] C[redacted]

[redacted] H[redacted] AC [redacted]

- F[redacted]
- [redacted] AC [redacted]
- [redacted] E[redacted] F[redacted]

[redacted] [redacted] [redacted]

[redacted]

[redacted] E[redacted] [redacted] D[redacted]

[redacted] A[redacted] H[redacted]

[redacted] A[redacted] E[redacted] D[redacted]

A[redacted]

[redacted] H[redacted] AC [redacted]

[redacted] H[redacted] AC C[redacted]

[redacted] DDC[redacted]

F[redacted] F[redacted] C[redacted]

[redacted] L[redacted]

[redacted] L[redacted] [redacted] [redacted] [

[illegible] E[illegible] E[illegible]

[illegible]

[illegible] C[illegible]

[illegible]

[redacted] H[redacted] E[redacted] C[redacted] [redacted] A[redacted]

[redacted]

[redacted] [redacted] I[redacted] [redacted]

[redacted] [redacted]

E[redacted] [redacted] [redacted] [redacted] [redacted] E[redacted] C[redacted] M[redacted] [redacted] [redacted] [redacted] [

[illegible] E[illegible] C[illegible] D[illegible] L[illegible] F[illegible]

[illegible] CDD[illegible] HDD[illegible] J[illegible] D[illegible]

G[illegible] E[illegible]

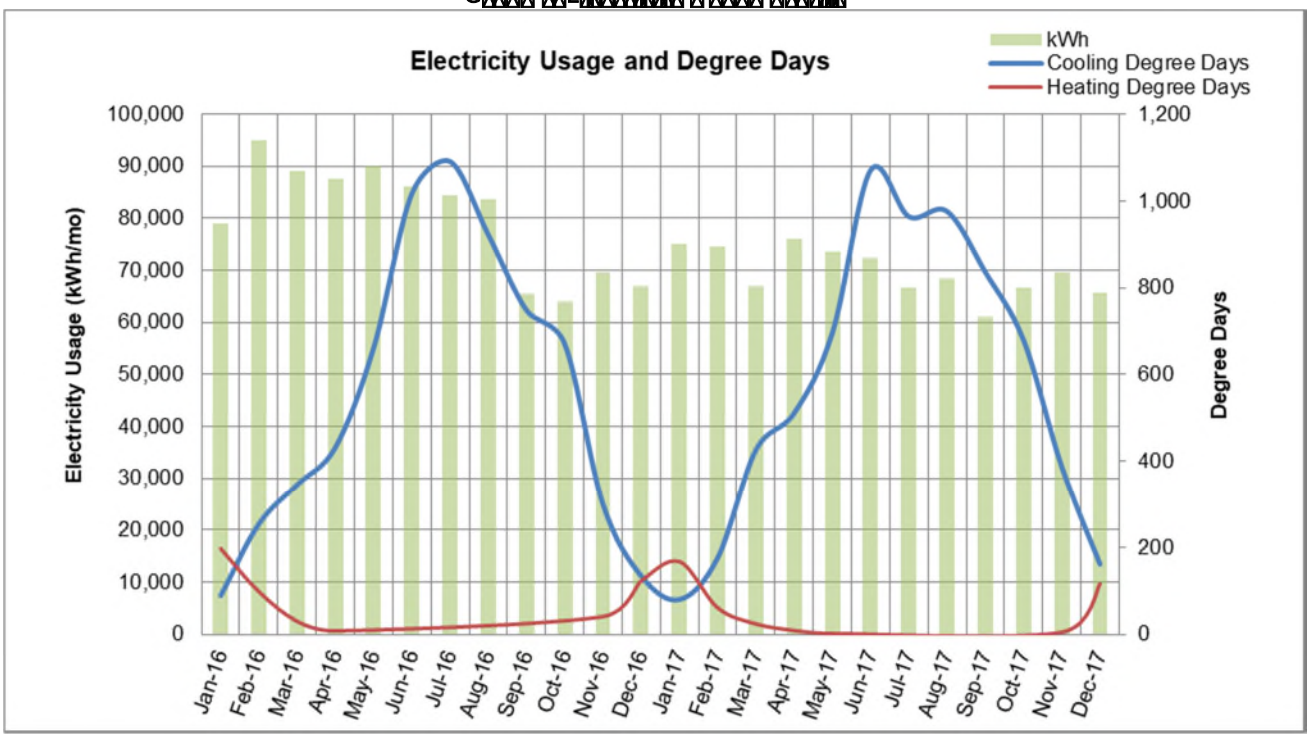

C[illegible] [illegible] [illegible] [

G[illegible] [illegible] L[illegible] F[illegible]

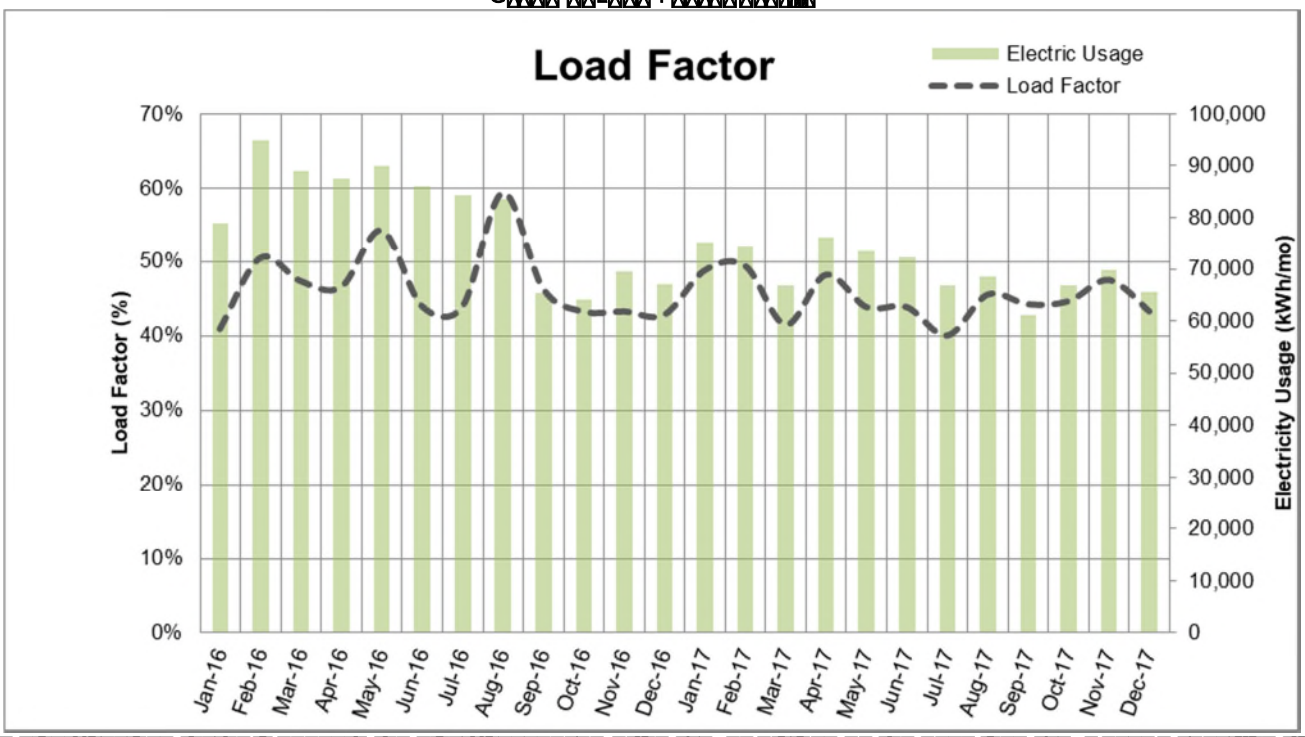
Load Factor
Electric Usage
Load Factor
Load Factor (%)
Electricity Usage (kWh/mo)
70%
60%
50%
40%
30%
20%
10%
0%
100,000
90,000
80,000
70,000
60,000
50,000
40,000
30,000
20,000
10,000
0
Jan-16
Feb-16
Mar-16
Apr-16
May-16
Jun-16
Jul-16
Aug-16
Sep-16
Oct-16
Nov-16
Dec-16
Jan-17
Feb-17
Mar-17
Apr-17
May-17
Jun-17
Jul-17
Aug-17
Sep-17
Oct-17
Nov-17
Dec-17

[illegible] [illegible] [illegible] [

[illegible] [illegible] [illegible] [

[illegible] E[illegible] D[illegible]

[illegible] E[illegible] D[illegible] F[illegible]

[illegible] [illegible] [illegible] [

[illegible] E[illegible] C[illegible] D[illegible] [illegible] F[illegible]

D[illegible] [illegible] [illegible] [

[illegible] E[illegible] E[illegible] [illegible] M[illegible] E[illegible] C[illegible]

[illegible] [illegible] [illegible] [

[illegible]	[illegible]	[illegible]	[illegible]	[illegible]	[illegible]	[illegible]
[illegible]	[illegible]	[illegible]	[illegible]	[illegible]	[illegible]	[illegible]
[illegible]	[illegible]	[illegible]	[illegible]	[illegible]	[illegible]	[illegible]
[illegible]	[illegible]	[illegible]	[illegible]	[illegible]	[illegible]	[illegible]
[illegible]	[illegible]	[illegible]	[illegible]	[illegible]	[illegible]	[illegible]
[illegible]	[illegible]	[illegible]	[illegible]	[illegible]	[illegible]	[illegible]
[illegible]	[illegible]	[illegible]	[illegible]	[illegible]	[illegible]	[illegible]
[illegible]	[illegible]	[illegible]	[illegible]	[illegible]	[illegible]	[illegible]

[illegible] [illegible] [illegible] E[illegible] [illegible] [illegible]

[illegible] EC[illegible] [illegible] [illegible] [illegible] [illegible] [illegible] ECM[illegible] [illegible] [illegible] [illegible] [illegible] [

[illegible] [illegible] [illegible] [

[illegible] E[illegible] C[illegible] E[illegible] A[illegible]

I[illegible] ECM[illegible] [illegible] CM[illegible] [illegible] [illegible] [

[illegible] [illegible] E[illegible] [illegible] I[illegible] E[illegible] I[illegible] [illegible]

	Annual Energy Cost per Square Foot ($ / sq ft-yr)	Site EUI (kBtu / sq ft-yr)	Annual Energy Cost ($ / yr)
Existing (CY 2017)	2.596245071	74.6	$101,404
Proposed	1.918375589	58.5	$74,928
% Savings	26.1%	21.6%	26.1%

[illegible] E[illegible] I [illegible] [illegible] [illegible] [illegible] [illegible] [illegible] [illegible] E[illegible] I [illegible] [illegible] [illegible] [illegible] [illegible] [illegible] ECM[illegible] [illegible] [illegible] [illegible] [illegible] [illegible] [illegible]

G[illegible] [illegible] [illegible] E[illegible] [illegible] I[illegible] E[illegible] I[illegible]

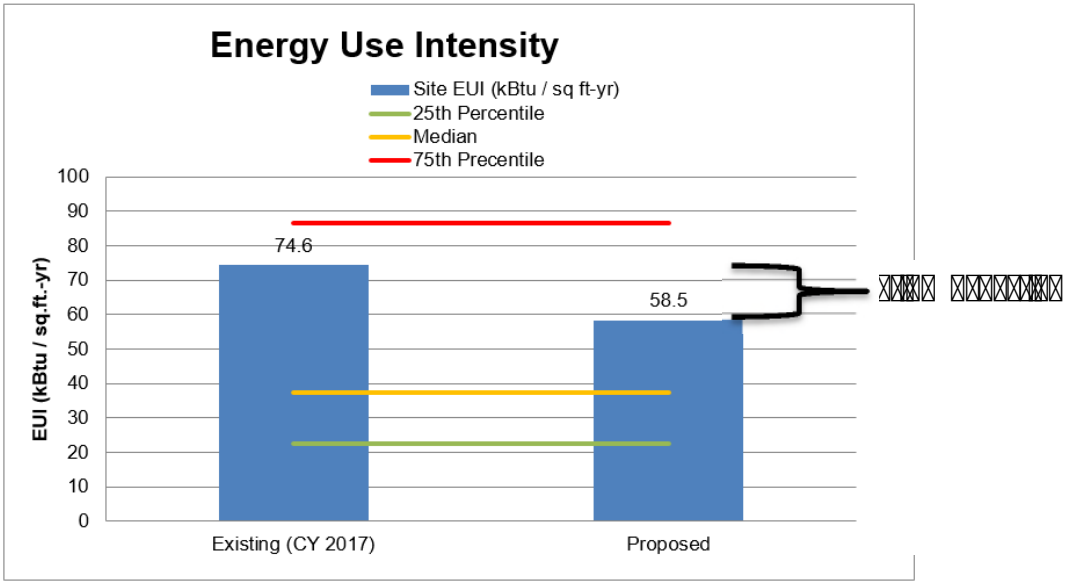

[illegible] [illegible] E[illegible] [illegible] [illegible] [illegible] [illegible] I[illegible] [illegible] [illegible]

[illegible] [illegible] [illegible] [illegible] [illegible] [illegible] [

[illegible]

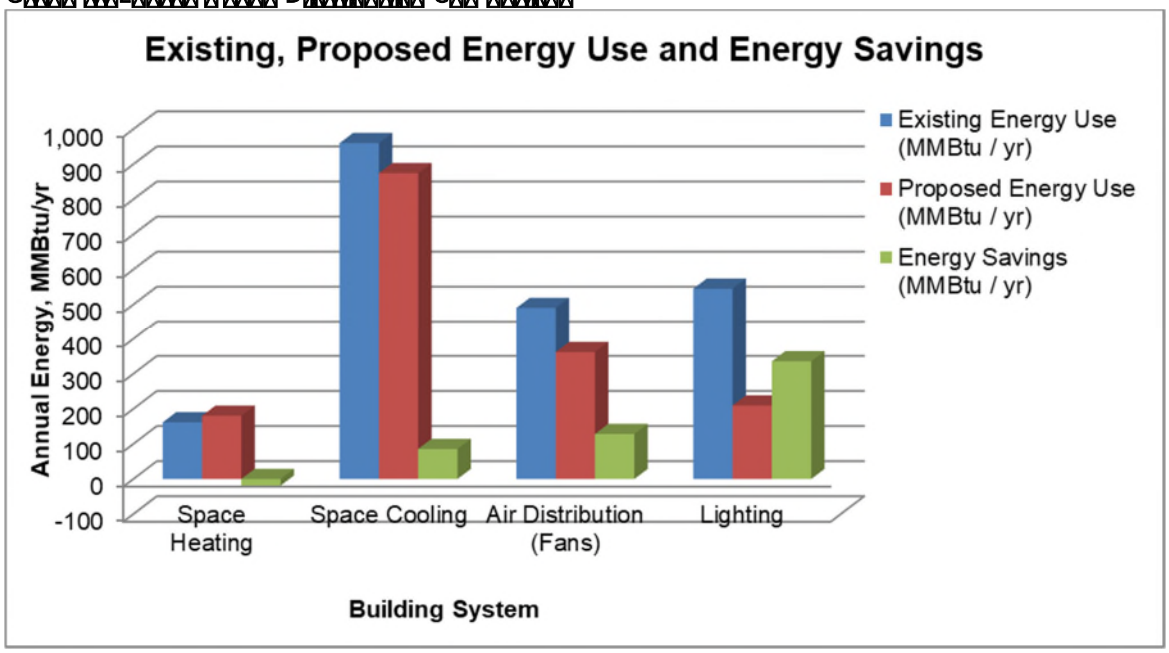
Existing, Proposed Energy Use and Energy Savings
Annual Energy, MMBtu/yr
1,000
900
800
700
600
500
400
300
200
100
0
-100
Space Heating
Space Cooling
Air Distribution (Fans)
Lighting
Building System
Existing Energy Use (MMBtu / yr)
Proposed Energy Use (MMBtu / yr)
Energy Savings (MMBtu / yr)

[illegible]

End Uses Type	Existing Annual Energy Use			Proposed Annual Energy Use			% Reduction
	Electric (kWh/yr)	Natural Gas (therm/yr)	Total Site Energy Use (MMBtu/yr)	Electric (kWh/yr)	Natural Gas (therm/yr)	Total Site Energy Use (MMBtu/yr)	
Space Heating	37,811	328	162	37,811	514	180	-11%
Space Cooling	281,504	0	960	256,402	0	875	9%
Air Distribution (Fans)	143,757	0	491	106,105	0	362	26%
Water Distribution (Pumps)	3,267	0	11	3,267	0	11	0%
SHW/DHW	0	252	25	0	252	25	0%
Conveyance	17,177	0	59	17,177	0	59	0%
Lighting	159,851	0	545	61,472	0	210	62%
Plug Loads	143,702	0	490	143,702	0	490	0%
Information Technology	20,931	0	71	20,931	0	71	0%
Total Estimated	808,001	580	2,815	646,867	766	2,284	19%
Total per Sq-ft	20.7	0.0	0.1	16.6	0.0	0.1	

[illegible] E[illegible] C[illegible] M[illegible]

[illegible] EXC [illegible] ECM[illegible] [illegible] [illegible] [

[illegible] [illegible] [illegible] [

ECM

Economic Summary

Existing Condition

Proposed Equipment

Proposed Operation

Project Description

[illegible]

[illegible]

Recommendation

[illegible]

[illegible]

[illegible]

[illegible] ECM [illegible] I[illegible] L[illegible]

Economic Summary

ECM[illegible]
E[illegible]
A[illegible] M[illegible] D[illegible]
[illegible] G[illegible]
E[illegible] C[illegible]
E[illegible] I[illegible] C[illegible]
[illegible]
M[illegible] C[illegible] M[illegible]

Existing Condition

[illegible] A[illegible] L[illegible]

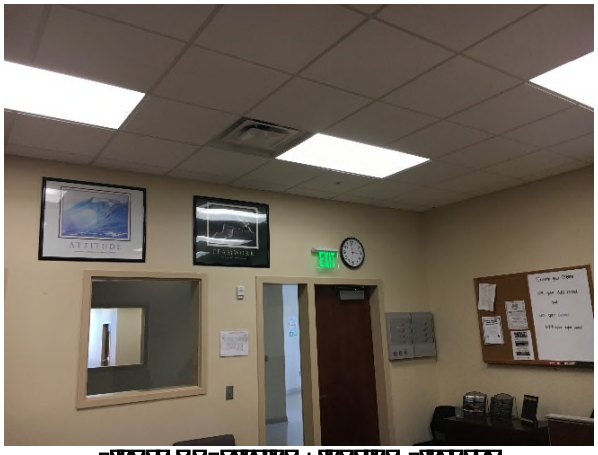

F[illegible] E[illegible] L[illegible] F[illegible]

Recommendation

[redacted]

[redacted]

[redacted]

[redacted]

Interactive Effects

[redacted]

[redacted]

Economic Summary

[redacted]	
[redacted]	[redacted]
[redacted]	[redacted]
[redacted]	[redacted]
[redacted]	[redacted]
[redacted]	[redacted]
[redacted]	[redacted]
[redacted]	[redacted]
[redacted]	[redacted]
[redacted]	[redacted]
[redacted]	[redacted]

Existing Condition

[illegible] E[illegible] C[illegible] [illegible] [illegible] [

[redacted] M[redacted] [redacted] F[redacted] C[redacted]

[redacted] ECM[redacted]

[redacted] ECM [redacted] L[redacted] M[redacted]

Existing Condition

[redacted]

Recommendation

[redacted] AC [redacted]

[redacted]

F[redacted]

[redacted]

Scope of Work

[redacted] AC [redacted] A [redacted]

Interactive Effects

[redacted]

[redacted] ECM [redacted] F[redacted]

E[illegible] C[illegible]

H[illegible] [illegible] [illegible] [illegible] [illegible] [illegible] [illegible] [illegible] [illegible] [illegible] [illegible] [illegible] [illegible] [illegible] [illegible] [illegible] A [illegible] C[illegible] [illegible] [illegible] [illegible] [illegible] [illegible] [illegible] [illegible] [illegible] [illegible] [illegible] [illegible] [illegible] [illegible]

[illegible] [illegible]

[illegible] EC [illegible] [illegible] [illegible] [illegible] [illegible] [illegible] [illegible] [illegible] [illegible] F[illegible] [illegible] [illegible] [illegible] [illegible] [illegible] [illegible] [illegible] H AC [illegible] [illegible] [illegible] [illegible] [illegible] [illegible] [illegible] [illegible] [illegible] [illegible] [illegible] [illegible] [illegible] F [illegible] [illegible]

[illegible] F [illegible] [illegible] [illegible] [illegible] [illegible] [illegible] [illegible] [illegible] [illegible] [illegible] [illegible] [illegible] [illegible] [illegible] [illegible]

[illegible]

- [illegible]
- [illegible]
- [illegible]
- [illegible]

[illegible]

[illegible] M[illegible] [illegible] F[illegible]

D[illegible] [illegible] [illegible] [illegible] [illegible] [illegible] E[illegible] C[illegible] [illegible] [illegible] [illegible] [illegible] [

[illegible] [illegible] [illegible] M[illegible] M[illegible]

[illegible] [illegible] [illegible] [

[illegible]

[illegible] [illegible] [illegible] [

ROCK GAP
Energy Services

APPENDIX

CALCULATIONS AND COST ESTIMATES

ROCK GAP
Energy Services

ECM-3: Interior Lighting Upgrade

Education Center
Energy Audit
February-2019
NORESCO

ECM [illegible]
[illegible]
[illegible]
[illegible]
[illegible]
[illegible]
[illegible]
[illegible]
[illegible]
[illegible]
[illegible]
[illegible]
[illegible]
[illegible]

			Existing										Proposed							Savings	
Floor	Room Number	Space Type	Lamp Type	# of Fixtures	Lighting Control	Number of Burned Out Fixtures	Lamps / Fixture	Watts / Lamp	Ballast Factor	Run Hours	Demand (kW)	Energy Usage (kWh)	Fixture Type	# of Fixtures	Lamps / Fixture	Watts / Lamp	Total new lamps	Demand (kW)	Energy Usage (kWh)	Demand (kW)	Energy Savings (kWh)
1	102 Corridor	Hallway	C - 32W PLT	6	No Sensor	0	1	32	1	3,360	0.2	568	G24q PL Lamp -	6	1	9	6	0.1	181	0.1	386
1	101 Lobby	Lobby	M - 42W TRT	8	No Sensor	0	2	42	1	3,360	0.6	1,987	G24q PL Lamp -	8	2	9	16	0.1	484	0.4	1,503
1	101 Lobby	Lobby	C - 32W PLT	3	No Sensor	0	1	32	1	3,360	0.1	284	G24q PL Lamp -	3	1	9	3	0.0	91	0.1	193
1	103 Womens	Bathroom	C - 32W PLT	3	Sensor	0	1	32	1	2,352	0.1	199	G24q PL Lamp -	3	1	9	3	0.0	64	0.1	135
1	103 Womens	Bathroom	G - 4' T5	1	Sensor	0	2	28	1	2,352	0.0	116	4' T5 LED	1	2	13	2	0.0	61	0.0	55
1	104 Mens	Bathroom	C - 32W PLT	3	Sensor	0	1	32	1	2,352	0.1	199	G24q PL Lamp -	3	1	9	3	0.0	64	0.1	135
1	104 Mens	Bathroom	G - 4' T5	1	Sensor	0	2	28	1	2,352	0.0	116	4' T5 LED	1	2	13	2	0.0	61	0.0	55
1	Stair 1	Hallway	M - 42W TRT	4	No Sensor	0	2	42	1	3,360	0.3	993	G24q PL Lamp -	4	2	9	8	0.1	242	0.2	752
1	Janitor	Storage	F - 4' T5	1	No Sensor	0	2	28	1	200	0.0	10	4' T5 LED	1	2	13	2	0.0	5	0.0	5
1	Elev Eqpt	Storage	F - 4' T5	1	No Sensor	0	2	28	1	200	0.0	10	4' T5 LED	1	2	13	2	0.0	5	0.0	5
1	Elevator	Hallway	K - 42W TRT	1	No Sensor	0	1	42	1	3,360	0.0	124	G24q PL Lamp -	1	1	9	1	0.0	30	0.0	94
1	Multipurpos e Rm	Classroom	B - 4' T5	23	No Sensor	0	3	28	1	2,560	1.7	4,352	4' T5 LED	23	3	13	69	0.9	2,296	0.8	2,056
1	Multipurpos e Rm	Classroom	C - 32W PLT	4	No Sensor	0	1	32	1	2,560	0.1	288	G24q PL Lamp -	4	1	9	4	0.0	92	0.1	196
1	Multipurpos e Rm	Classroom	U1 - 4' T5	1	No Sensor	0	1	28	1	2,560	0.0	63	4' T5 LED	1	1	13	1	0.0	33	0.0	30
1	Chair Storage	Storage	A - 4' T5	3	Sensor	0	2	28	1	140	0.1	21	4' T5 LED	3	2	13	6	0.1	11	0.1	10
1	112 Staff Lounge	Office	B - 4' T5	9	No Sensor	0	3	28	1	2,000	0.7	1,331	4' T5 LED	9	3	13	27	0.4	702	0.3	629
1	112 Staff Lounge	Office	C - 32W PLT	2	No Sensor	0	1	32	1	2,000	0.1	113	G24q PL Lamp -	2	1	9	2	0.0	36	0.0	77
1	112 Staff Lounge	Office	P - 32W TRT	3	No Sensor	0	1	32	1	2,000	0.1	169	G24q PL Lamp -	3	1	9	3	0.0	54	0.1	115
1	113 Workroom	Conference	A - 4' T5	4	No Sensor	0	2	28	1	1,280	0.2	252	4' T5 LED	4	2	13	8	0.1	133	0.1	119
1	114 115 Toilets	Bathroom	G - 4' T5	2	Sensor	0	2	28	1	2,352	0.1	232	4' T5 LED	2	2	13	4	0.1	122	0.0	110
1	116 Classroom	Classroom	D1/2/3 - 8' T5	9	Sensor	0	2	54	1	1,792	0.9	1,533	8' T5 LED	9	2	36	18	0.6	1,161	0.2	372
1	117 Art Class	Classroom	D1/2/3 - 8' T5	9	Sensor	0	2	54	1	1,792	0.9	1,533	8' T5 LED	9	2	36	18	0.6	1,161	0.2	372
1	117 Art Class	Classroom	U1 - 4' T5	1	Sensor	0	1	28	1	1,792	0.0	44	4' T5 LED	1	1	13	1	0.0	23	0.0	21
1	118 Art Storage	Storage	F - 4' T5	1	Sensor	0	2	28	1	140	0.0	7	4' T5 LED	1	2	13	2	0.0	4	0.0	3
1	120 Outdr Kitchn Stg	Storage	F - 4' T5	1	Sensor	0	2	28	1	140	0.0	7	4' T5 LED	1	2	13	2	0.0	4	0.0	3
1	Stair 2	Hallway	J - 4' T5	1	No Sensor	0	2	28	1	3,360	0.0	166	4' T5 LED	1	2	13	2	0.0	87	0.0	78
1	108 Corridor	Hallway	B - 4' T5	16	No Sensor	0	3	28	1	3,360	1.2	3,974	4' T5 LED	16	3	13	48	0.6	2,097	0.6	1,877
1	108 Corridor	Hallway	S - 4" LED	14	No Sensor	0	1	8	N/A	3,360	0.1	376	N/R	14	1	8	14	0.1	376	0.0	0
1	121 Mech	Storage	F - 4' T5	3	Sensor	0	2	28	1	140	0.1	21	4' T5 LED	3	2	13	6	0.1	11	0.1	10
1	122 Elec	Storage	F - 4' T5	2	Sensor	0	2	28	1	140	0.1	14	4' T5 LED	2	2	13	4	0.1	7	0.0	7
1	124 Storage	Storage	A - 4' T5	2	Sensor	0	2	28	1	140	0.1	14	4' T5 LED	2	2	13	4	0.1	7	0.0	7
1	125 Files	Office	A - 4' T5	3	Sensor	0	2	28	1	1,400	0.1	207	4' T5 LED	3	2	13	6	0.1	109	0.1	98
1	132-139 Offices	Office	B - 4' T5	21	Sensor	0	3	28	1	1,400	1.6	2,173	4' T5 LED	21	3	13	63	0.8	1,147	0.7	1,027
1	Office Corridor	Hallway	B - 4' T5	6	No Sensor	0	3	28	1	3,360	0.4	1,490	4' T5 LED	6	3	13	18	0.2	786	0.2	704
1	130 Reception	Office	B - 4' T5	6	Sensor	0	3	28	1	1,400	0.4	621	4' T5 LED	6	3	13	18	0.2	328	0.2	293
1	130 Reception	Office	S - 4" LED	7	Sensor	0	1	8	N/A	1,400	0.1	78	N/R	7	1	8	7	0.1	78	0.0	0
1	141, 143 Computer Labs	Classroom	D1/2/3 - 8' T5	21	Sensor	0	2	54	1	1,792	2.0	3,577	8' T5 LED	21	2	36	42	1.5	2,710	0.5	867
1	141, 143 Computer Labs	Classroom	C - 32W PLT	2	Sensor	0	1	32	1	1,792	0.1	101	G24q PL Lamp -	2	1	9	2	0.0	32	0.0	69
1	160 Music Eqpt	Storage	A - 4' T5	3	Sensor	0	2	28	1	140	0.1	21	4' T5 LED	3	2	13	6	0.1	11	0.1	10
1	Music	Classroom	B - 4' T5	6	Sensor	0	3	28	1	1,792	0.4	795	4' T5 LED	6	3	13	18	0.2	419	0.2	375
1	153 Corridor	Hallway	B - 4' T5	5	No Sensor	0	3	28	1	3,360	0.4	1,242	4' T5 LED	5	3	13	15	0.2	655	0.2	587
1	Vest	Hallway	C - 32W PLT	2	Sensor	0	1	32	1	2,352	0.1	132	G24q PL Lamp -	2	1	9	2	0.0	42	0.0	90
1	156 Storage	Storage	H - 4' T5	2	Sensor	0	2	28	1	140	0.1	14	4' T5 LED	2	2	13	4	0.1	7	0.0	7
1	154 Activity Rm	Classroom	B - 4' T5	6	Sensor	0	3	28	1	1,792	0.4	795	4' T5 LED	6	3	13	18	0.2	419	0.2	375
1	155 A Cooke	Office	B - 4' T5	4	Sensor	0	3	28	1	1,400	0.3	414	4' T5 LED	4	3	13	12	0.2	218	0.1	196
1	162 Open Office	Office	B - 4' T5	12	No Sensor	0	3	28	1	2,000	0.9	1,774	4' T5 LED	12	3	13	36	0.5	936	0.4	838
1	163 Corridor	Hallway	N(1) - 32W PLT	2	No Sensor	0	1	32	1	3,360	0.1	189	G24q PL Lamp -	2	1	9	2	0.0	60	0.0	129
1	Group [illegible]	Classroom	B - 4' T5	8	Sensor	0	3	28	1	1,792	0.6	1,060	4' T5 LED	8	3	13	24	0.3	559	0.3	501
1	167,168 Manager	Office	B - 4' T5	11	Sensor	0	3	28	1	1,400	0.8	1,138	4' T5 LED	11	3	13	33	0.4	601	0.4	538
1	161 Helpdesk	Office	N(1) - 32W PLT	7	No Sensor	0	1	32	1	2,000	0.2	394	G24q PL Lamp -	7	1	9	7	0.1	126	0.1	268
1	161 Helpdesk	Office	P - 32W TRT	2	No Sensor	0	1	32	1	2,000	0.1	113	G24q PL Lamp -	2	1	9	2	0.0	36	0.0	77
1	173 Roof Access	Storage	H - 4' T5	2	No Sensor	0	2	28	1	200	0.1	20	4' T5 LED	2	2	13	4	0.1	10	0.0	9
1	180 Library	Office	D1/2/3 - 8' T5	12	No Sensor	0	2	54	1	2,000	1.1	2,281	8' T5 LED	12	2	36	24	0.9	1,728	0.3	553
1	180 Library	Office	N(1) - 32W PLT	19	Sensor	0	1	32	1	1,400	0.5	749	G24q PL Lamp -	19	1	9	19	0.2	239	0.4	510
1	180 Library	Office	C - 32W PLT	1	Sensor	0	1	32	1	1,400	0.0	39	G24q PL Lamp -	1	1	9	1	0.0	13	0.0	27
1	172 Teen Room	Classroom	D1/2/3 - 8' T5	6	Sensor	0	2	54	1	1,792	0.6	1,022	8' T5 LED	6	2	36	12	0.4	774	0.1	248
1	172 Teen Room	Classroom	C - 32W PLT	2	Sensor	0	1	32	1	1,792	0.1	101	G24q PL Lamp -	2	1	9	2	0.0	32	0.0	69
2	220 Storage	Storage	F - 4' T5	16	Sensor	0	2	28	1	140	0.8	110	4' T5 LED	16	2	13	32	0.4	58	0.4	52
2	219 It	Storage	F - 4' T5	4	Sensor	0	2	28	1	140	0.2	28	4' T5 LED	4	2	13	8	0.1	15	0.1	13
2	Stair 2	Hallway	J - 4' T5	2	No Sensor	0	2	28	1	3,360	0.1	331	4' T5 LED	2	2	13	4	0.1	175	0.0	156
2	206 Corridor	Hallway	D1/2/3 - 8' T5	12	Sensor	0	2	54	1	2,352	1.1	2,682	8' T5 LED	12	2	36	24	0.9	2,032	0.3	650
2	218 Student Lounge	Office	B - 4' T5	9	No Sensor	0	3	28	1	2,000	0.7	1,331	4' T5 LED	9	3	13	27	0.4	702	0.3	629
2	218 Student Lounge	Office	C - 32W PLT	9	No Sensor	0	1	32	1	2,000	0.3	507	G24q PL Lamp -	9	1	9	9	0.1	162	0.2	345
2	218 Student Lounge	Office	P - 32W TRT	3	No Sensor	0	1	32	1	2,000	0.1	169	G24q PL Lamp -	3	1	9	3	0.0	54	0.1	115
2	217 Storage	Storage	A - 4' T5	2	No Sensor	0	2	28	1	200	0.1	20	4' T5 LED	2	2	13	4	0.1	10	0.0	9
2	216 Snack Bar	Office	A - 4' T5	2	No Sensor	0	2	28	1	2,000	0.1	197	4' T5 LED	2	2	13	4	0.1	104	0.0	93
2	214 Yes Manager	Office	B - 4' T5	3	No Sensor	0	3	28	1	2,000	0.2	444	4' T5 LED	3	3	13	9	0.1	234	0.1	210
2	215 Files	Office	A - 4' T5	2	No Sensor	0	2	28	1	2,000	0.1	197	4' T5 LED	2	2	13	4	0.1	104	0.0	93
2	213 Open Office	Office	B - 4' T5	25	No Sensor	0	3	28	1	2,000	1.8	3,696	4' T5 LED	25	3	13	75	1.0	1,950	0.9	1,746
2	213 Open Office	Office	U1 - 4' T5	1	No Sensor	0	1	28	1	2,000	0.0	49	4' T5 LED	1	1	13	1	0.0	26	0.0	23
2	210-212 Tutoring	Classroom	B - 4' T5	19	No Sensor	0	3	28	1	2,560	1.4	3,595	4' T5 LED	19	3	13	57	0.7	1,897	0.7	1,699
2	204/205 Restrooms	Bathroom	C - 32W PLT	6	Sensor	0	1	32	1	2,352	0.2	397	G24q PL Lamp -	6	1	9	6	0.1	127	0.1	270
2	204/205 Restrooms	Bathroom	G - 4' T5	2	Sensor	0	2	28	1	2,352	0.1	232	4' T5 LED	2	2	13	4	0.1	122	0.0	110
2	202 corridor	Hallway	C - 32W PLT	7	No Sensor	0	1	32	1	3,360	0.2	662	G24q PL Lamp -	7	1	9	7	0.1	212	0.1	451
2	201 Balcony	Hallway	C - 32W PLT	5	No Sensor	0	1	32	1	3,360	0.1	473	G24q PL Lamp -	5	1	9	5	0.0	151	0.1	322
2	201 Balcony	Hallway	M - 42W TRT	8	No Sensor	0	2	42	1	3,360	0.6	1,987	G24q PL Lamp -	8	2	9	16	0.1	484	0.4	1,503

ROCK GAP
Energy Services

2	205 Corridor	Hallway	C - 32W PLT	6	No Sensor	0	1	32	1	3,360	0.2	568	G24q PL Lamp -	6	1	9	6	0.1	181	0.1	386
2	251-256 Admin Area	Office	B - 4' T5	24	Sensor	0	3	28	1	1,400	1.8	2,484	4' T5 LED	24	3	13	72	0.9	1,310	0.8	1,173
2	251-256 Admin Area	Office	A - 4' T5	4	Sensor	0	2	28	1	1,400	0.2	276	4' T5 LED	4	2	13	8	0.1	146	0.1	130
2	250 conference	Conference	C - 32W PLT	6	Sensor	0	1	32	1	896	0.2	151	G24q PL Lamp -	6	1	9	6	0.1	48	0.1	103
2	250 conference	Conference	D1/2/3 - 8' T5	1	Sensor	0	2	54	1	896	0.1	85	8' T5 LED	1	2	36	2	0.1	65	0.0	21
2	243 conference	Conference	C - 32W PLT	1	No Sensor	0	1	32	1	1,280	0.0	36	G24q PL Lamp -	1	1	9	1	0.0	12	0.0	25
2	243 conference	Conference	D1/2/3 - 8' T5	9	Sensor	0	2	54	1	896	0.9	766	8' T5 LED	9	2	36	18	0.6	581	0.2	186
2	243 conference	Conference	U1 - 4' T5	1	Sensor	0	1	28	1	896	0.0	22	4' T5 LED	1	1	13	1	0.0	12	0.0	10
2	242 Janitor	Storage	F - 4' T5	1	Sensor	0	2	28	1	140	0.0	7	4' T5 LED	1	2	13	2	0.0	4	0.0	3
2	241 Workroom	Conference	B - 4' T5	4	Sensor	0	3	28	1	896	0.3	265	4' T5 LED	4	3	13	12	0.2	140	0.1	125
2	240 Literacy	Conference	D1/2/3 - 8' T5	9	Sensor	0	2	54	1	896	0.9	766	8' T5 LED	9	2	36	18	0.6	581	0.2	186
2	236 Conference	Conference	B - 4' T5	2	Sensor	0	3	28	1	896	0.1	132	4' T5 LED	2	3	13	6	0.1	70	0.1	63
2	236 Conference	Conference	C - 32W PLT	6	Sensor	0	1	32	1	896	0.2	151	G24q PL Lamp -	6	1	9	6	0.1	48	0.1	103
2	233-235 Office	Office	B - 4' T5	8	Sensor	0	3	28	1	1,400	0.6	828	4' T5 LED	8	3	13	24	0.3	437	0.3	391
2	236 tutoring	Office	B - 4' T5	4	No Sensor	0	3	28	1	2,000	0.3	591	4' T5 LED	4	3	13	12	0.2	312	0.1	279
2	237 Corridor	Hallway	B - 4' T5	5	No Sensor	0	3	28	1	3,360	0.4	1,242	4' T5 LED	5	3	13	15	0.2	655	0.2	587
2	232 Reception	Conference	A - 4' T5	4	Sensor	0	2	28	1	896	0.2	177	4' T5 LED	4	2	13	8	0.1	93	0.1	83
2	231 Reception	Conference	U1 - 4' T5	1	No Sensor	0	1	28	1	1,280	0.0	32	4' T5 LED	1	1	13	1	0.0	17	0.0	15
2	230 Classroom	Classroom	D1/2/3 - 8' T5	9	Sensor	0	2	54	1	1,792	0.9	1,533	8' T5 LED	9	2	36	18	0.6	1,161	0.2	372
TOTAL	-	-	-	**562**	-		-	-			**35.1**	**66,874**	-	**562**	-	-	**1,223**	**19.7**	**36,275**	**15.5**	**30,599**

Typical Lighting Operating Hours

		Hours / Day					Annual Hours	
Space Type	Average Hours Saved From Sensors	Mon. - Fri.	Sat.	Sun.	Hours / Week	Weeks / Year	Without Sensors	With Sensors
Classroom	30%	12	4	0	64	40	**2,560**	**1,792**
Lobby	30%	12	12	12	84	40	**3,360**	**2,352**
Office	30%	10	0	0	50	40	**2,000**	**1,400**
Hallway	30%	12	12	12	84	40	**3,360**	**2,352**
Bathroom	30%	12	12	12	84	40	**3,360**	**2,352**
Storage	30%	1	0	0	5	40	**200**	**140**
Conference	30%	6	2	0	32	40	**1,280**	**896**
Kitchen	30%	9	9	9	63	40	**2,520**	**1,764**

Existing				Proposed		
Existing Lamp	Watts/ Lamp	Lamps/ Fixture	Ballast Factor	New Fixture	New Watts/Lamp	New Watts/Fixture
H - 4' T5	28	2	0.88	4' T5 LED	13	26
J - 4' T5	28	2	0.88	4' T5 LED	13	26
A - 4' T5	28	2	0.88	4' T5 LED	13	26
G - 4' T5	28	2	0.88	4' T5 LED	13	26
F - 4' T5	28	2	0.88	4' T5 LED	13	26
B - 4' T5	28	3	0.88	4' T5 LED	13	39
U1 - 4' T5	28	1	0.88	4' T5 LED	13	13
D1/2/3 - 8' T5	54	2	0.88	8' T5 LED	36	72
S - 4" LED	8	1	N/A	N/R	8	8
P - 32W TRT	32	1	0.88	LED G24q PL Lamp - 4-Pin	9	9
K - 42W TRT	42	1	0.88	LED G24q PL Lamp - 4-Pin	9	9
M - 42W TRT	42	2	0.88	LED G24q PL Lamp - 4-Pin	9	18
N(L) - 32W PLT	32	1	0.88	LED G24q PL Lamp - 4-Pin	9	9
C - 32W PLT	32	1	0.88	LED G24q PL Lamp - 4-Pin	9	9

New Lamp	Quantity of new Lamp
4' T5 LED	**857**
8' T5 LED	194
LED G24q F	151
N/R	21

Plant	Fuel	System Efficiency	% of Load	Conversion Factor
Heating	Natural Gas	[illegible]	100%	100
	#2 Fuel Oil	[illegible]	0%	139.4
	Electric	1.0	0%	3.412

HVAC Interaction Calculation*

HVAC Cooling Interaction Factor ($HVAC_C$)	HVAC Cooling Demand Factor ($HVAC_D$)	Estimated Lighting Savings in Cooled Space	Cooling Demand Savings (kW)	Cooling Energy Savings (kWh)	HVAC Heating Interaction Factor ($HVAC_H$)	Estimated Lighting Savings in Heated Space	Gas Heating Savings (therms)	Oil Heating Savings (gal)	Electric Heating Savings (kWh)
0.11	0.20	80%	**2.5**	**2,693**	-0.008	100%	**-229**	**0**	**0**

Annual Months of Demand Savings	12
Demand Coincidence Factor	1.0

ROCK GAP
Energy Services

ECM-1: Exterior Lighting Upgrade
Education Center
Energy Audit
February-2019
NORESCO

ECM[illegible]
E[illegible]
A[illegible] M[illegible] D[illegible]
[illegible] G[illegible]
[illegible] F[illegible]
[illegible]
[illegible]
E[illegible] C[illegible]
E[illegible] I[illegible] C[illegible]
[illegible]
E[illegible]
[illegible] C[illegible]
[illegible]
M[illegible] C[illegible]

Light Fixture Location	Fixture Quantity	Lighting Control	Area Illuminated	Annual Operating Hours	Existing Exterior Lighting					Proposed Exterior Lighting			Energy Savings (kWh)
					Quantity Fixtures Burned Out	Fixture Type	Watts Per Fixture	Watts Per Ballast (Burned Out Fixtures)	Energy Consumption (kWh)	Replacement Fixture	Watts Per Fixture	Energy Consumption (kWh)	
Parking Lot	16	Photo sensor	Parking	4,380	0	400W MH	458	0	32,097	150 Watt LED NextGen II Parking Lot Lights - 20,000 Lumen - 5000K - Slip Fit Mount - WITH photocell	150	10,512	21,585
Parking Lot	22	Photo sensor	Parking	4,380	0	400W MH	458	0	44,133	150 Watt LED NextGen II Parking Lot Lights - 20,000 Lumen - 5000K - Slip Fit Mount - WITH photocell	150	14,454	29,679
Parking Lot	9	Photo sensor	Walkway	4,380	0	50W MH	72	0	2,838	LED - PAR20 - 7 Watt - 525 Lumens	7	276	2,562
Parking Lot	3	Photo sensor	Walkway	4,380	0	4' T8	36	0	478	4 ft. T8 LED Tube - 1750 Lumens - 12.5W - 4100 Kelvin - 120-277V	13	164	314
2nd floor patio and Bldg Exits	9	Time clock	Façade	4,380	0	CFL, (2) 42W lamp	100	0	3,942	LED G24q PL Lamp - 4-Pin	18	710	3,232
Covered Front Walk	19	Time clock	Walkway	4,380	0	CFL, (2) 42W lamp	100	0	8,322	LED G24q PL Lamp - 4-Pin	18	1,498	6,824
Around Library	7	Photo sensor	Façade	4,380	0	CFL, (1) 32W lamp	38	0	1,168	LED G24q PL Lamp - 4-Pin	9	276	892
													65,088

Annual Months of Demand Savings	0
Demand Coincidence Factor	0%

ROCK GAP
Energy Services

ECM-4: Solar PV
Education Center
Energy Audit
February-2019
NORESCO

ECM[illegible]	
E[illegible]	[illegible]
A[illegible]	[illegible]
[illegible]	[illegible]
E[illegible]	[illegible]
E[illegible]	[illegible]
[illegible]	[illegible]
E[illegible]	[illegible]
[illegible]	[illegible]
[illegible]	[illegible]
M[illegible]	[illegible]

Annual Production from Aurora Solar:

111,539 kWh

System Size :

72 kW

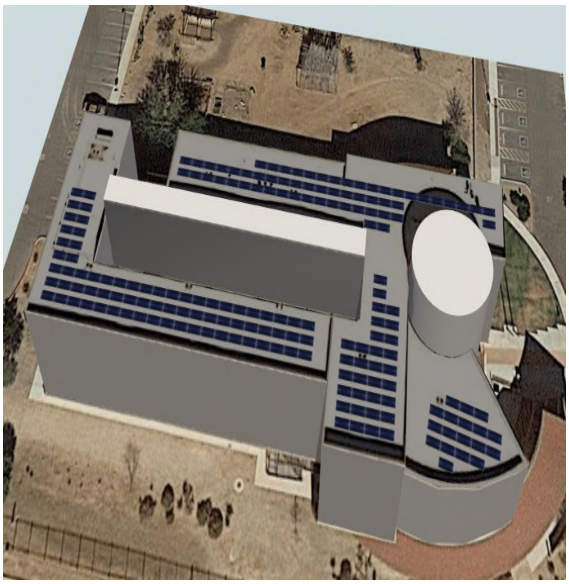

PROJECT FINANCIAL ECONOMICS

Annual Maintenance Cost	$1,800

Cost per kw installed (Gross)	$3,030
nstalled Cost	$218,160
Markup	120%
Sell Price	$261,792
Tax Credit	$103,538
Net Price	$158,254

Monthly kW savings											
3.96	7.25	4.04	16.24	16.37	8.24	8.97	11.5	6.49	4.68	4.98	2.73
Jan	Feb	Mar	Apr	May	Jun	Jul	Aug	Sep	Oct	Nov	Dec

ROCK GAP
Energy Services

ECM-5: Plug Load Management
Education Center
Energy Audit
February-2019
NORESCO

ECM
E
A M D
G
E C
E I C
GHG E M C

Estimated Plug Load (kWh)	Plug load utilization %	Total Energy for Plug Load Management (kWh)	Plug load Savings %	Plug load Savings kWh
143,702	25%	35,926	20%	7,185

ROCK GAP
Energy Services

ECM-2: Retro -Commissioning
Education Center
Energy Audit
February-2019
NORESCO

[illegible]	
E[illegible]	[illegible]
A[illegible] M[illegible] D[illegible]	[illegible]
[illegible] G[illegible]	[illegible]
E[illegible] C[illegible]	[illegible]
E[illegible] I[illegible] C[illegible]	[illegible]
[illegible]	[illegible]
GHG E[illegible] M[illegible]	[illegible]
C[illegible] GHG [illegible] M[illegible]	[illegible]

Total Annual Electric Energy Consumption (kWh)	Total Annual Natural Gas Consumption (Therm)	Average monthly peak kW	RCx savings %
836,720	580	212	7.5%

ROCK GAP
Energy Services

ECM-1: Exterior Lighting Upgrade									
N/N	SOURCE LINE ITEM	DESCRIPTION OF WORK	UNIT	QTY	MATERIAL		LABOR		TOTAL
					PER UNIT	TOTAL	PER UNIT	TOTAL	
1	https://www.ledlightexpert.com/150-Watt-LED-NextGen-II-Parking-Lot-Lights--20000-Lumen--5000K--Slip-Fit-Mount--WITH-photocell-_p_166.html	Replace parking lot pole fixtures with 150watt LED shoebox fixture	Per Fixture	38	$ 169	$ 6,422	$ 37.95	$ 1,442	$ 7,864
2	https://www.1000bulbs.com/product/172360/SATCO-S9405.html	Retrofit bollard lamps with 7watt LED lamp. Bypass Ballast	Per Lamp	9	$ 7	$ 63	$ 18.98	$ 171	$ 233
3	https://www.1000bulbs.com/product/200105/LEDT-10024.html	Retrofit Steplight lamps with 12.5W LED lamps, bypass ballast	Per Lamp	3	$ 6	$ 19	$ 18.98	$ 57	$ 76
4	https://www.1000bulbs.com/product/208967/SATCO-S29850.html	Retrofit Sconce and 10" pendant fixtures with 9watt plug and play LED lamp	Per Lamp	63	$ 11	$ 677	$ 9.49	$ 598	$ 1,275
								Sub-Total	$ 9,449
								O&P 10%	$ 945
								CONTINGENCY 10%	$ 1,039
								ASBESTOS ABATEMENT	$ -
								ASBESTOS CONTINGENCY 0%	$ -
								PAYMENT & PERFORMANCE BOND 0%	$ -
								IC FEE 0%	$ -
								INTEREST DURING CONSTRUCTION 3%	$ 343
								DESIGN AND CM 20%	$ 2,355.15
								Other ( ) 0%	$ -
								Total	**$ 14,200**

ECM-2: Retro -Commissioning									
N/N	SOURCE LINE ITEM	DESCRIPTION OF WORK	UNIT	QTY	MATERIAL		LABOR		TOTAL
					PER UNIT	TOTAL	PER UNIT	TOTAL	
1	Estimated based on past projects	RCx for Education building.	sf	39,058	$ 0.43	$ 16,951		$ -	$ 16,951
2	Estimated based on past projects	Allowance for project implementation	sf	39,058	$ 0.20	$ 7,812		$ -	$ 7,812
								Sub-Total	$ 24,763
								O&P 0%	$ -
								CONTINGENCY 10%	$ 2,476
								ASBESTOS ABATEMENT	$ -
								ASBESTOS CONTINGENCY 0%	$ -
								PAYMENT & PERFORMANCE BOND 0%	$ -
								IC FEE 0%	$ -
								INTEREST DURING CONSTRUCTION 0%	$ -
								DESIGN AND CM 0%	$ -
								Other ( ) 0%	$ -
								Total	**$ 27,300**

ECM-3: Interior Lighting Upgrade									
N/N	SOURCE LINE ITEM	DESCRIPTION OF WORK	UNIT	QTY	MATERIAL		LABOR		TOTAL
					PER UNIT	TOTAL	PER UNIT	TOTAL	
1	https://www.1000bulbs.com/product/175499/PLT-10433.html	Retrofit 4' T5 Fixtures with LED Lamps, Plug and Play	Per Lamp	857	8.95	$ 7,670	$ 9.49	$ 8,132	$ 15,802
2	https://greenlightdepot.com/collections/8ft-led-tubes/products/8ft-40w-led-tube-r17d-base-etl?variant=5257025617958	Retrofit 8' T5 Fixtures with LED lamps, bypass ballast	Per Lamp	194	18.50	$ 3,589	$ 18.98	$ 3,682	$ 7,271
3	https://www.1000bulbs.com/product/208967/SATCO-S29850.html	Retrofit 42W and 32W 4 tube CFLs with 9watt plug and play LED lamp	Per lamp	151	11.00	$ 1,661	$ 9.49	$ 1,433	$ 3,094
4	https://lampmaster.com/recycling-container-products/lampmaster/4ft-lampmaster-recycling-kit/	Fluorescent Lamp Recycling	per lamp	1,202	0.85	$ 1,021	$ -	$ -	$ 1,021
								Sub-Total	$ 27,187
								O&P 10%	$ 2,719
								CONTINGENCY 10%	$ 2,991
								ASBESTOS ABATEMENT	$ -
								ASBESTOS CONTINGENCY 0%	$ -
								PAYMENT & PERFORMANCE BOND 0%	$ -
								IC FEE 0%	$ -
								INTEREST DURING CONSTRUCTION 3%	$ 987
								DESIGN AND CM 20%	$ 6,776.70
								Other ( ) 0%	$ -
								Total	**$ 40,700**

ECM-4: Solar PV									
N/N	SOURCE LINE ITEM	DESCRIPTION OF WORK	UNIT	QTY	MATERIAL		LABOR		TOTAL
					PER UNIT	TOTAL	PER UNIT	TOTAL	
1	Estimated based on past projects	72 kW roof mounted solar PV system including installation and labor. Excludes any roof work.	kW	72	$ 3,030.00	$ 218,160		$ -	$ 218,160

ROCK GAP
Energy Services

Sub-Total		$	218,160
O&P	0%	$	-
CONTINGENCY	20%	$	43,632
ASBESTOS ABATEMENT		$	-
ASBESTOS CONTINGENCY	0%	$	-
PAYMENT & PERFORMANCE BOND	0%	$	-
IC FEE	0%	$	-
INTEREST DURING CONSTRUCTION	0%	$	-
DESIGN AND CM	0%	$	-
Other ( )	0%	$	-
Total		**$**	**261,800**

ECM-5: Plug Load Management

N/N	SOURCE LINE ITEM	DESCRIPTION OF WORK	UNIT	QTY	MATERIAL		LABOR		TOTAL
					PER UNIT	TOTAL	PER UNIT	TOTAL	
1	Estimated based on past projects	Plug load controllers, wholesale price for large order w/ extended warrant & software programming	EA	75	$ 160.00	$ 12,000	$ 18.98	$ 1,423	$ 13,423
Sub-Total									$ 13,423
O&P								10%	$ 1,342
CONTINGENCY								10%	$ 1,477
ASBESTOS ABATEMENT									$ -
ASBESTOS CONTINGENCY								0%	$ -
PAYMENT & PERFORMANCE BOND								0%	$ -
IC FEE								0%	$ -
INTEREST DURING CONSTRUCTION								3%	$ 487
DESIGN AND CM								20%	$ 3,345.89
Other ( )								0%	$ -
Total									**$ 20,100**

ECM [illegible]

Economic Summary

ECM [illegible]
[illegible]
[illegible]
[illegible]
[illegible]
[illegible]
[illegible]
[illegible]

Existing Condition

[illegible]

- [illegible]
- [illegible]
- [illegible]
- [illegible] CFL[illegible]
- [illegible] CFL[illegible]

[illegible]

Recommendation

[illegible] LED [illegible] LED [illegible]

[illegible] LED [illegible]

[illegible] LED [illegible]

[illegible] LED [illegible]

F[illegible] [illegible]E[illegible] [illegible] [illegible] [illegible] [illegible]LED [illegible] [illegible] [illegible] [illegible]

[illegible]C[illegible] [illegible]E [illegible] F [illegible] [illegible]K

[illegible] G[illegible]

[illegible] D[illegible] [illegible] [illegible] [illegible] [

[redacted] [redacted] [redacted] [redacted] [redacted] [redacted] [redacted] [redacted] [redacted] [redacted] [redacted] [redacted] [redacted] [redacted]

Description of Work	Unit	Qty
Replace parking lot pole fixtures with 150watt LED shoebox fixture	Per Fixture	38
Retrofit bollard lamps with 7watt LED lamp, bypass ballast	Per Lamp	9
Retrofit Steplight lamps with 12.5W LED lamps, bypass ballast	Per Lamp	3
Retrofit Sconce and 10" pendant fixtures with 9watt plug and play LED lamp	Per Lamp	63

[redacted] A[redacted] [redacted] [redacted] [redacted] [redacted] [redacted] [redacted] [redacted] [redacted] [redacted] [redacted] [redacted] [redacted] [

[illegible] [illegible] CFL L[illegible] [illegible] [illegible] E[illegible] B[illegible] F[illegible]

[illegible] E[illegible] [illegible] [illegible] [illegible] [illegible] [illegible] [illegible] [illegible] [illegible] LED [illegible] [illegible] [illegible] [illegible] [illegible] [illegible] [illegible] [illegible]

[illegible] C[illegible]

[illegible] A[illegible]

[illegible] C[illegible]
C[illegible]

[illegible]

LIFEBULB

LED T8 SERIES

BYPass LED T8 - 4FT

COMMERCIAL SPEC GRADE

Replaces 32W 4ft Fluorescent T8

Superior All-Around Light Distribution

Coated Shatter-Resistant Glass

FEATURES

- BYPass the Ballast - Easy Retrofit Installation
- Full Glass Lens with 310° Light Distribution
- Uniform Light Output From End-to-End
- Universal Input Voltage - 120-277V
- UL + NSF/ANSI Standard 2 + DLC4.0 QPL Listed
- Instant-ON with No Flicker
- 5-Year Warranty

Proprietary IC-Driver design allows for high efficiency and exceptional longterm performance

Light Engine produces uniform light oputput from end-to-end.

Specifications and Technical Data

MODEL	BASE TYPE	WATTS / EQV.	LUMEN	CCT	LENGTH	VOLTAGE	CRI	THD	CARTON QTY	LIGHT DISTRIBUTION
LBP8F1730B	Bi-Pin G13	12.5W / 32W	1650LM	3000K	4 FT	120-277V	83	<20%	16	310°
LBP8F1735B	Bi-Pin G13	12.5W / 32W	1650LM	3500K	4 FT	120-277V	83	<20%	16	310°
LBP8F1741B	Bi-Pin G13	12.5W / 32W	1750LM	4100K	4 FT	120-277V	83	<20%	16	310°
LBP8F1745B	Bi-Pin G13	12.5W / 32W	1750LM	4500K	4 FT	120-277V	83	<20%	16	310°
LBP8F1750B	Bi-Pin G13	12.5W / 32W	1800LM	5000K	4 FT	120-277V	83	<20%	16	310°
LBP8F1930B	Bi-Pin G13	13.5W / 32W	1800LM	3000K	4 FT	120-277V	83	<20%	16	310°
LBP8F1935B	Bi-Pin G13	13.5W / 32W	1800LM	3500K	4 FT	120-277V	83	<20%	16	310°
LBP8F1941B	Bi-Pin G13	13.5W / 32W	1900LM	4100K	4 FT	120-277V	83	<20%	16	310°
LBP8F1945B	Bi-Pin G13	13.5W / 32W	1900LM	4500K	4 FT	120-277V	83	<20%	16	310°
LBP8F1950B	Bi-Pin G13	13.5W / 32W	2000LM	5000K	4 FT	120-277V	83	<20%	16	310°
LBP8F2130B	Bi-Pin G13	15.0W / 32W	1900LM	3000K	4 FT	120-277V	83	<20%	16	310°
LBP8F2135B	Bi-Pin G13	15.0W / 32W	1900LM	3500K	4 FT	120-277V	83	<20%	16	310°
LBP8F2141B	Bi-Pin G13	15.0W / 32W	2000LM	4100K	4 FT	120-277V	83	<20%	16	310°
LBP8F2145B	Bi-Pin G13	15.0W / 32W	2000LM	4500K	4 FT	120-277V	83	<20%	16	310°
LBP8F2150B	Bi-Pin G13	15.0W / 32W	2100LM	5000K	4 FT	120-277V	83	<20%	16	310°
LBP8F2530B	Bi-Pin G13	18.5W / 32W	2400LM	3000K	4 FT	120-277V	83	<20%	16	310°
LBP8F2535B	Bi-Pin G13	18.5W / 32W	2400LM	3500K	4 FT	120-277V	83	<20%	16	310°
LBP8F2541B	Bi-Pin G13	18.5W / 32W	2500LM	4100K	4 FT	120-277V	83	<20%	16	310°
LBP8F2545B	Bi-Pin G13	18.5W / 32W	2500LM	4500K	4 FT	120-277V	83	<20%	16	310°
LBP8F2550B	Bi-Pin G13	18.5W / 32W	2600LM	5000K	4 FT	120-277V	83	<20%	16	310°

* Suitable for use in totaly enclosed fixtures

** Suitable for damp locations. Not for use where exposed to the weather or moisture

LM-80 LM-79

Sold by: LEDLightExpert.com
800-674-9420
sales@LEDLightExpert.com

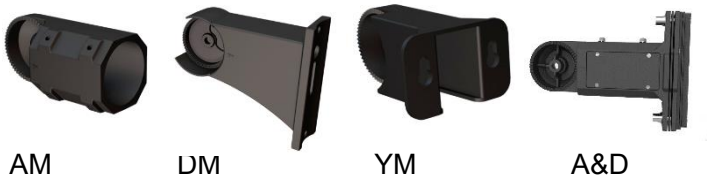

AM DM YM A&D

P/N：RG-NextGen-2--S-G07-150_WCT3A1-abcdef

Note：

The letter "a" can be can be 2 letters represent lamp colors; “BH = Black、WH=White、BR=Brown or Customized”

The letter "b" can be "P" or blank to represent Photocell or None Photocell;

The letter "c" can be "S" or blank to represent Surge protector or None Surge protector;

The letter "d" can be "M" or None, represent Motion sensor or No Motion sensor.

The letter "e" can be "AM","DM","YM","A&D" represent bracket type.

The letter "f"can be any two-digit number to represent CCT. ”40=4000k、45=4500k、50=5000k、57=5700k”

DIMENSIONS

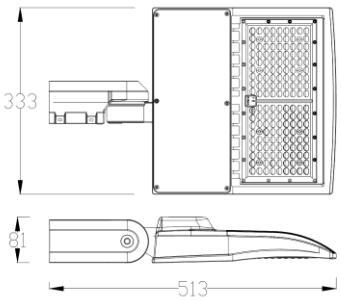

AM

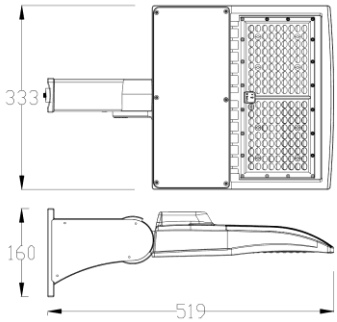

DM

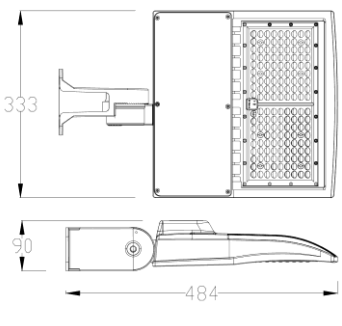

YM

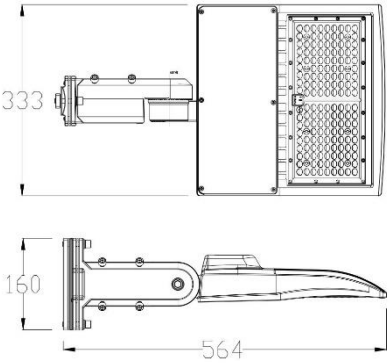

A&D

ADVANTAGE

- UL cUL DLC Premium certificate.
- Seoul /Lumileds Chip, high CRI.
- IP65 driver, input voltage 100-277VAC.
- Output constant current lever can be adjusted through output cable with 1-10V.
- No UV or IR in the beam.
- Easy to install and operate.
- Energy saving, long lifespan.
- Light is soft and uniform, safe to eyes.
- Instant start, NO flickering, NO humming.
- Green and eco-friendly without mercury.
-

APPLICATION

- Outdoor basketball court, tennis court.
- Badminton court, the football field.
- The school playground, stadium.
- Community leisure entertainment plaza, road lamp etc.

SPECIFICATIONS

OPTICAL	Input Power	150W
	Lumen	19500-21000LM
	Lumen Efficacy	125-140 LM/W
	Color Temperature	4000K, 4500K, 5000K, 5700K
	CRI	>70
	Viewing Angle	150*85 Degree（Type Ⅲ）
ELECTRICAL	Input Voltage	100-277VAC 50/60Hz (480vac available to order)
	PF	≥0.9
	THD	≤20%
	Driver Model	Meanwell HLG-150H-48B (1-10Vdc Dimmer)
	Optional Accessory	Photocell / Surge protector/ Motion sensor
MATERIALS	LED Brand	SEOUL / LUMILEDS
	LED Type	SMD3030
	LED QTY	308 PCS
	Housing	Aluminum Alloy
	Housing Color	Black / Brown/ white /
	Waterproof Rating	WET（IP65）
OTHERS	Operating Temperature	-20℃ TO 40℃
	Operating Humidity	20％-90％ RH
	Storage Temperature	-30℃ TO 80℃
	Storage Humidity	10％-95％ RH
	Warranty Time	5 Years

DLC Premium Rated – A Tougher Certification

Not an initial light spike! DLC Premium requires 90% Light Maintenance for over 36,000 Hours, Dark Sky Compliance and Additional Performance Criteria Demands!

Model# RG-NextGen-2-S-G07-150WCT3B1-a[P;blank][S;blank][M;blank]e57

Manufacturer: RuggedGrade
Brand: RuggedGrade
Technical Requirements Version: 4.3
Date Qualified: 05/16/2018
Product ID: PLEC6X5OS45Z

Categorization

Main: Outdoor Luminaires
General Application: High Output
Primary Use: Architectural Flood and Spot Luminaires

Classification: Premium
Is Parent Product: No
DLC Family Code: NANOUI
Listing Status: Listed

Reported Data | Zonal Lumens | Spacing Criteria | Product Features | Version History | Family Data

Light Output: 20050 lm
Wattage: 155.68 W
Efficacy: 128.79 lm/W
Power Factor: 0.9
CCT: 5700 K
CRI: 70
Total Harmonic Distortion: 15 %

LIGHT DISTRIBUTION TESTING PARAMETERS

Luminaire Property

Luminaire Manufacturer:
Voltage: 199.5 V
Current: 0.7751 A
Power: 152.47 W
Power Factor: 0.9836

Photometric Results

IES Classification: Type III
Longitudinal Classification: Medium
Total Rated Lamp Lumens: 19179.2 lm
Measurement Flux: 19179.2 lm
Efficiency: 100%
Downward Ratio: 100%
Upward Ratio: 0%
Luminaire Efficacy Rating (LER): 125.79
Central Intensity: 4647.29 cd
Max. Intensity: 6975.57 cd
Pos of Max. Intensity: H22.5 V69

Luminous Intensity Distribution Curve

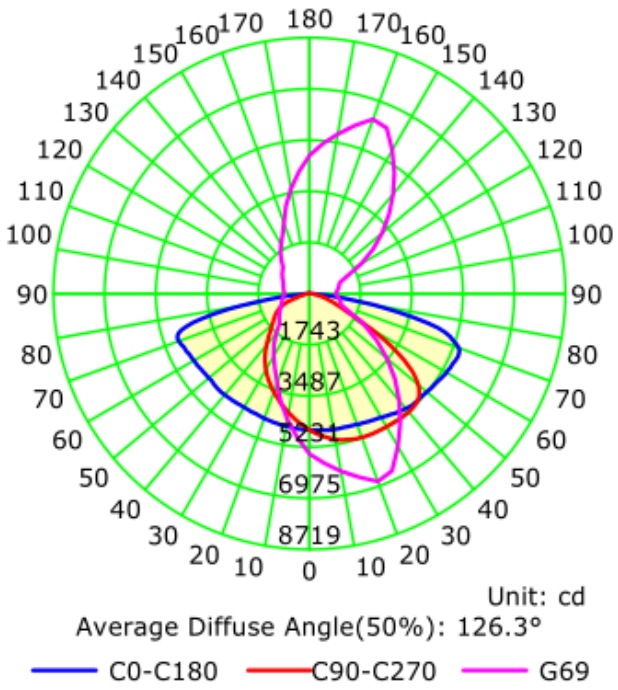

Average Diffuse Angle(50%): 126.3°

C0-C180 C90-C270 G69

The Average Illuminance Effective Figure

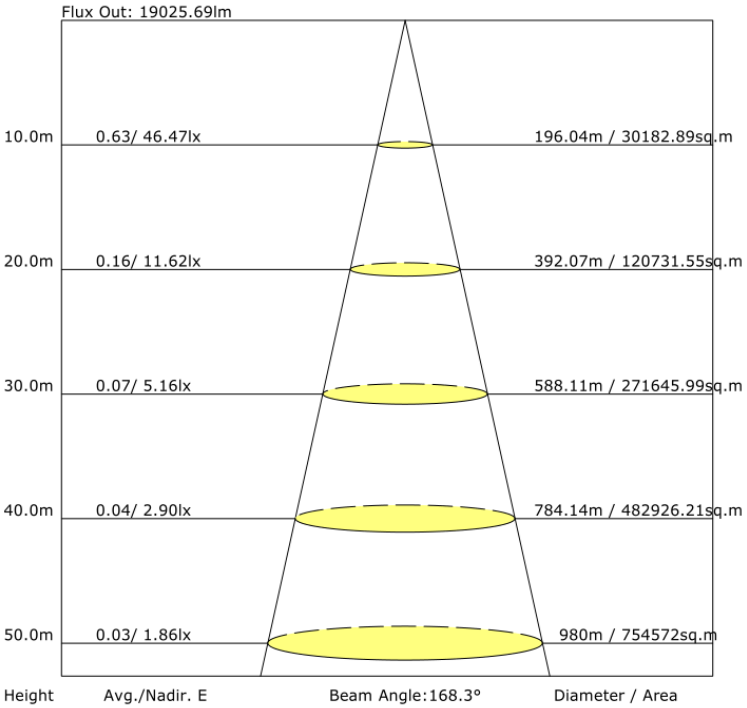

PACKAGE

Stent Type	Lamp Net Weight	Size	Qty / Carton	Gross Weight / Carton
AM	5.4KG	585*385*160 MM	1 PC	6.3KG
DM	5.9KG	585*385*160 MM	1 PC	6.8 KG
YM	5.1 KG	585*385*160 MM	1 PC	6KG
A&D	6.3KG	585*385*160 MM	1 PC	7.2 KG

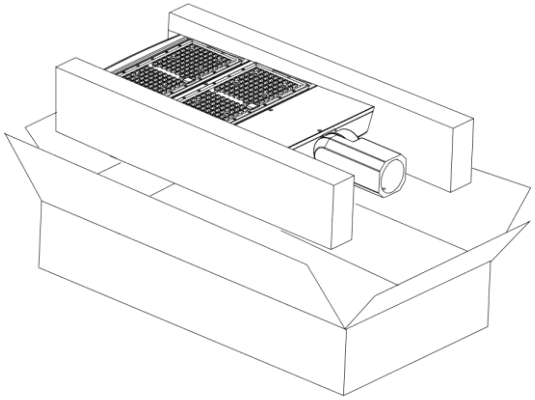

150 Watt NextGen II with Slip Fit

Arm Mount is 22 Inch / 564mm Long and Yoke Mount is 19 inch 484mm Long

NOTICE FOR USER

- Please turn off power before install or change assembly parts.
- The input voltage and lamps should be matched, after connecting the power line, Please make sure the wiring section is insulated.
- No-professionals, must not install and disassemble the lamps.

TROUBLE SHOOTINGS

Troubles	Check points
Flickering of the light	Turn off the power and turn on again in 3 minutes. If same phenomena occur, then call agencies.
Out of working	Please check the connection.

S9405

7PAR20/LED/40'/2700K/120V/D
7 watt PAR20 LED; 2700K; 40' beam spread; Medium base; 120 volts

Features
- Solid State LED lighting
- Reflector replacement lamp
- Long life
- IP65 - Wet location rated
- Approved for enclosed fixtures
- For Indoor and Outdoor use
- ABS Lens
- Dimmable

S9405

Item Number	UPC	Voltage	Watts	Incandescent Equivalent	Lamp Shape	Base	ANSI Base
S9405	045923094057	120	7	50W	PAR20	Medium	E26

Lamp Code	Dimmable/Non-Dimmable	Suggested Dimmers	Finish	MOL In Inches	MOD In Inches	Initial Lumens	Average Rated Hours
7PAR20/LED/40'/2700K/120V/D	Dimmable	Compatible dimmers for S9405	Silver	3-1/32"	2.50"	525	25000

Kelvin Temp	Color	CRI	Beam Spread Deg	Pack	Package Type	ENERGY STAR	RoHS Compliant
2700	Warm White	80	40	24/6	Box	ENERGY STAR	Yes

Fixture Type	UL or ETL Listed	UL Classification	Warranty
Enclosed Rated	Yes	cULus - Wet Location Rated	3 Year Limited

S29850

9WPLH/LED/830/DR/4P
9W LED PL 4-Pin; 3000K; 950 Lumens; G24q base; 50000 Average rated hours; 120 Deg. beam spread

S29850

Features
- Replaces 26, 32, and 42 watt CFLs
- Direct Replacement - for use with Electronic, Instant Start, Rapid Start, and Programmed Start ballasts with no rewiring required. Ballast required.
- Instant on to full brightness / no flickering
- Horizontal operation
- Up to 70% energy saving
- Long life - 50,000 hours
- 5 year warranty

*Ballast required (See Ballast Compatibility Chart)

Item Number	UPC	Watts	Fluorescent Equivalent	Lamp Shape	Base	Lamp Code	Dimmable/Non-Dimmable
S29850	045923298509	9	26, 32, and 42 watt CFL	PL	G24q	9WPLH/LED/830/DR/4P	Non-Dimmable

Finish	MOL In Inches	MOD In Inches	Initial Lumens	Average Rated Hours	Kelvin Temp	Color	CRI
Frost	6-5/8"	1-3/32"	950	50000	3000	Soft White	82

Beam Spread Deg	Operating Temperature	Package Type	CEC Status	DLC ID:	RoHS Compliant	UL or ETL Listed	UL Classification
120	-20C (-4F) to a maximum of +45C (+113F)	Box	Lawful for sale in California	PLJAGBSSPJZJ DLC Search	Yes	Yes	cULus Classified - Damp Location Rated

Warranty
5 Year Limited

ECM [redacted]

Economic Summary

[redacted]	
[redacted]	[redacted]
[redacted]	[redacted]
[redacted]	[redacted]
[redacted]	[redacted]
[redacted]	[redacted]
[redacted]	[redacted]
[redacted]	[redacted]

Existing Condition

[redacted]

[redacted]

[redacted]

[redacted]

[redacted]

[redacted]

[redacted]

[redacted]

[redacted]

B M I I

E C BM

Recommendation

E C H AC

E C C C H AC CM

C CM H AC CM CM CM CM

C[illegible] E F [illegible] K

G[illegible]

[illegible] [illegible] [illegible] [

ECM [illegible] I[illegible] L[illegible] [illegible]

Economic Summary

ECM[illegible] [illegible]
E[illegible] [illegible] [illegible]
A[illegible] M[illegible] D[illegible] [illegible] [illegible]
[illegible] G[illegible] [illegible] [illegible]
E[illegible] C[illegible] [illegible]
E[illegible] I[illegible] [illegible] C[illegible]
[illegible] [illegible] [illegible]
M[illegible] C[illegible] [illegible] [illegible] M[illegible]

Existing Condition

[illegible] [illegible] [illegible] [

Recommendation

[redacted] EXC [redacted] LED [redacted]

L[redacted] LED [redacted] [redacted] [redacted] [redacted] [redacted]

L[redacted] LED [redacted] [redacted] [redacted] [redacted]

[redacted] ECM [redacted] [redacted] LED [redacted]

C[redacted] E [redacted] F [redacted] K

[redacted] G[redacted]

[redacted] D[redacted]

[redacted]

[redacted]

[redacted]

[redacted] C[redacted]

[redacted]

[redacted] M[redacted] F[redacted]

[redacted] L[redacted] F[redacted]

[redacted]

Fixture	Quantity of new Lamps
[redacted] LED [redacted]	[redacted]
[redacted] LED [redacted]	[redacted]
[redacted] L CFL [redacted] LED [redacted]	[redacted]

[illegible] A[illegible] C[illegible] C[illegible] M[illegible]

[illegible] C[illegible]

[illegible] F[illegible] F[illegible]

[illegible] LED [illegible] B[illegible] LED [illegible]

[illegible] LED [illegible] B[illegible] LED [illegible]

[illegible] LED [illegible] B[illegible] LED [illegible]

[illegible] [illegible] E[illegible] C[illegible] E[illegible] A[illegible]

			Existing				Proposed				
Floor	Room Number	Space Type	Lamp Type	# of Fixtures	Lamps / Fixture	Watts / Lamp	Fixture Type	# of Fixtures	Lamps / Fixture	Watts / Lamp	Total new lamps
1	102 Corridor	Hallway	C - 32W PLT	6	1	32	LED G24q PL Lamp - 4-Pin	6	1	9	6
1	101 Lobby	Lobby	M - 42W TRT	8	2	42	LED G24q PL Lamp - 4-Pin	8	2	9	16
1	101 Lobby	Lobby	C - 32W PLT	3	1	32	LED G24q PL Lamp - 4-Pin	3	1	9	3
1	103 Womens	Bathroom	C - 32W PLT	3	1	32	LED G24q PL Lamp - 4-Pin	3	1	9	3
1	103 Womens	Bathroom	G - 4' T5	1	2	28	4' T5 LED	1	2	13	2
1	104 Mens	Bathroom	C - 32W PLT	3	1	32	LED G24q PL Lamp - 4-Pin	3	1	9	3
1	104 Mens	Bathroom	G - 4' T5	1	2	28	4' T5 LED	1	2	13	2
1	Stair 1	Hallway	M - 42W TRT	4	2	42	LED G24q PL Lamp - 4-Pin	4	2	9	8
1	Janitor	Storage	F - 4' T5	1	2	28	4' T5 LED	1	2	13	2
1	Elev Eqpt	Storage	F - 4' T5	1	2	28	4' T5 LED	1	2	13	2
1	Elevator	Hallway	K - 42W TRT	1	1	42	LED G24q PL Lamp - 4-Pin	1	1	9	1
1	Multipurpose Rm	Classroom	B - 4' T5	23	3	28	4' T5 LED	23	3	13	69
1	Multipurpose Rm	Classroom	C - 32W PLT	4	1	32	LED G24q PL Lamp - 4-Pin	4	1	9	4
1	Multipurpose Rm	Classroom	U1 - 4' T5	1	1	28	4' T5 LED	1	1	13	1
1	Chair Storage	Storage	A - 4' T5	3	2	28	4' T5 LED	3	2	13	6
1	112 Staff Lounge	Office	B - 4' T5	9	3	28	4' T5 LED	9	3	13	27
1	112 Staff Lounge	Office	C - 32W PLT	2	1	32	LED G24q PL Lamp - 4-Pin	2	1	9	2
1	112 Staff Lounge	Office	P - 32W TRT	3	1	32	LED G24q PL Lamp - 4-Pin	3	1	9	3
1	113 Workroom	Conference	A - 4' T5	4	2	28	4' T5 LED	4	2	13	8
1	114 115 Toilets	Bathroom	G - 4' T5	2	2	28	4' T5 LED	2	2	13	4
1	116 Classroom	Classroom	D1/2/3 - 8' T5	9	2	54	8' T5 LED	9	2	36	18
1	117 Art Class	Classroom	D1/2/3 - 8' T5	9	2	54	8' T5 LED	9	2	36	18
1	117 Art Class	Classroom	U1 - 4' T5	1	1	28	4' T5 LED	1	1	13	1
1	118 Art Storage	Storage	F - 4' T5	1	2	28	4' T5 LED	1	2	13	2
1	120 Outdr Kitchn Stg	Storage	F - 4' T5	1	2	28	4' T5 LED	1	2	13	2
1	Stair 2	Hallway	J - 4' T5	1	2	28	4' T5 LED	1	2	13	2
1	108 Corridor	Hallway	B - 4' T5	16	3	28	4' T5 LED	16	3	13	48
1	108 Corridor	Hallway	S - 4" LED	14	1	8	N/R	14	1	8	0
1	121 Mech	Storage	F - 4' T5	3	2	28	4' T5 LED	3	2	13	6
1	122 Elec	Storage	F - 4' T5	2	2	28	4' T5 LED	2	2	13	4
1	124 Storage	Storage	A - 4' T5	2	2	28	4' T5 LED	2	2	13	4
1	125 Files	Office	A - 4' T5	3	2	28	4' T5 LED	3	2	13	6
1	132-139 Offices	Office	B - 4' T5	21	3	28	4' T5 LED	21	3	13	63
1	Office Corridor	Hallway	B - 4' T5	6	3	28	4' T5 LED	6	3	13	18
1	130 Reception	Office	B - 4' T5	6	3	28	4' T5 LED	6	3	13	18
1	130 Reception	Office	S - 4" LED	7	1	8	N/R	7	1	8	0
1	141, 143 Computer Labs	Classroom	D1/2/3 - 8' T5	21	2	54	8' T5 LED	21	2	36	42
1	141, 143 Computer Labs	Classroom	C - 32W PLT	2	1	32	LED G24q PL Lamp - 4-Pin	2	1	9	2
1	160 Music Eqpt	Storage	A - 4' T5	3	2	28	4' T5 LED	3	2	13	6
1	Music	Classroom	B - 4' T5	6	3	28	4' T5 LED	6	3	13	18
1	153 Corridor	Hallway	B - 4' T5	5	3	28	4' T5 LED	5	3	13	15
1	Vest	Hallway	C - 32W PLT	2	1	32	LED G24q PL Lamp - 4-Pin	2	1	9	2
1	156 Storage	Storage	H - 4' T5	2	2	28	4' T5 LED	2	2	13	4
1	154 Activity Rm	Classroom	B - 4' T5	6	3	28	4' T5 LED	6	3	13	18
1	155 A Cooke	Office	B - 4' T5	4	3	28	4' T5 LED	4	3	13	12
1	162 Open Office	Office	B - 4' T5	12	3	28	4' T5 LED	12	3	13	36
1	163 Corridor	Hallway	N(1) - 32W PLT	2	1	32	LED G24q PL Lamp - 4-Pin	2	1	9	2

[illegible] E[illegible] C[illegible] E[illegible] A[illegible]

			Existing				Proposed				
Floor	Room Number	Space Type	Lamp Type	# of Fixtures	Lamps / Fixture	Watts / Lamp	Fixture Type	# of Fixtures	Lamps / Fixture	Watts / Lamp	Total new lamps
1	164-166 Group Study	Classroom	B - 4' T5	8	3	28	4' T5 LED	8	3	13	24
1	167,168 Manager	Office	B - 4' T5	11	3	28	4' T5 LED	11	3	13	33
1	161 Helpdesk	Office	N(1) - 32W PLT	7	1	32	LED G24q PL Lamp - 4-Pin	7	1	9	7
1	161 Helpdesk	Office	P - 32W TRT	2	1	32	LED G24q PL Lamp - 4-Pin	2	1	9	2
1	173 Roof Access	Storage	H - 4' T5	2	2	28	4' T5 LED	2	2	13	4
1	180 Library	Office	D1/2/3 - 8' T5	12	2	54	8' T5 LED	12	2	36	24
1	180 Library	Office	N(1) - 32W PLT	19	1	32	LED G24q PL Lamp - 4-Pin	19	1	9	19
1	180 Library	Office	C - 32W PLT	1	1	32	LED G24q PL Lamp - 4-Pin	1	1	9	1
1	172 Teen Room	Classroom	D1/2/3 - 8' T5	6	2	54	8' T5 LED	6	2	36	12
1	172 Teen Room	Classroom	C - 32W PLT	2	1	32	LED G24q PL Lamp - 4-Pin	2	1	9	2
2	220 Storage	Storage	F - 4' T5	16	2	28	4' T5 LED	16	2	13	32
2	219 IT	Storage	F - 4' T5	4	2	28	4' T5 LED	4	2	13	8
2	Stair 2	Hallway	J - 4' T5	2	2	28	4' T5 LED	2	2	13	4
2	206 Corridor	Hallway	D1/2/3 - 8' T5	12	2	54	8' T5 LED	12	2	36	24
2	218 Student Lounge	Office	B - 4' T5	9	3	28	4' T5 LED	9	3	13	27
2	218 Student Lounge	Office	C - 32W PLT	9	1	32	LED G24q PL Lamp - 4-Pin	9	1	9	9
2	218 Student Lounge	Office	P - 32W TRT	3	1	32	LED G24q PL Lamp - 4-Pin	3	1	9	3
2	217 Storage	Storage	A - 4' T5	2	2	28	4' T5 LED	2	2	13	4
2	216 Snack Bar	Office	A - 4' T5	2	2	28	4' T5 LED	2	2	13	4
2	214 Yes Manager	Office	B - 4' T5	3	3	28	4' T5 LED	3	3	13	9
2	215 Files	Office	A - 4' T5	2	2	28	4' T5 LED	2	2	13	4
2	213 Open Office	Office	B - 4' T5	25	3	28	4' T5 LED	25	3	13	75
2	213 Open Office	Office	U1 - 4' T5	1	1	28	4' T5 LED	1	1	13	1
2	210-212 Tutoring	Classroom	B - 4' T5	19	3	28	4' T5 LED	19	3	13	57
2	204/205 Restrooms	Bathroom	C - 32W PLT	6	1	32	LED G24q PL Lamp - 4-Pin	6	1	9	6
2	204/205 Restrooms	Bathroom	G - 4' T5	2	2	28	4' T5 LED	2	2	13	4
2	202 corridor	Hallway	C - 32W PLT	7	1	32	LED G24q PL Lamp - 4-Pin	7	1	9	7
2	201 Balcony	Hallway	C - 32W PLT	5	1	32	LED G24q PL Lamp - 4-Pin	5	1	9	5
2	201 Balcony	Hallway	M - 42W TRT	8	2	42	LED G24q PL Lamp - 4-Pin	8	2	9	16
2	205 Corridor	Hallway	C - 32W PLT	6	1	32	LED G24q PL Lamp - 4-Pin	6	1	9	6
2	251-256 Admin Area	Office	B - 4' T5	24	3	28	4' T5 LED	24	3	13	72
2	251-256 Admin Area	Office	A - 4' T5	4	2	28	4' T5 LED	4	2	13	8
2	250 conference	Conference	C - 32W PLT	6	1	32	LED G24q PL Lamp - 4-Pin	6	1	9	6
2	250 conference	Conference	D1/2/3 - 8' T5	1	2	54	8' T5 LED	1	2	36	2
2	243 conference	Conference	C - 32W PLT	1	1	32	LED G24q PL Lamp - 4-Pin	1	1	9	1
2	243 conference	Conference	D1/2/3 - 8' T5	9	2	54	8' T5 LED	9	2	36	18
2	243 conference	Conference	U1 - 4' T5	1	1	28	4' T5 LED	1	1	13	1
2	242 Janitor	Storage	F - 4' T5	1	2	28	4' T5 LED	1	2	13	2
2	241 Workroom	Conference	B - 4' T5	4	3	28	4' T5 LED	4	3	13	12
2	240 Literacy	Conference	D1/2/3 - 8' T5	9	2	54	8' T5 LED	9	2	36	18
2	236 Conference	Conference	B - 4' T5	2	3	28	4' T5 LED	2	3	13	6
2	236 Conference	Conference	C - 32W PLT	6	1	32	LED G24q PL Lamp - 4-Pin	6	1	9	6
2	233-235 Offices	Office	B - 4' T5	8	3	28	4' T5 LED	8	3	13	24
2	236 tutoring	Office	B - 4' T5	4	3	28	4' T5 LED	4	3	13	12
2	237 Corridor	Hallway	B - 4' T5	5	3	28	4' T5 LED	5	3	13	15
2	232 Resource Rm	Conference	A - 4' T5	4	2	28	4' T5 LED	4	2	13	8
2	232 Resource Rm	Conference	U1 - 4' T5	1	1	28	4' T5 LED	1	1	13	1
2	230 Classroom	Classroom	D1/2/3 - 8' T5	9	2	54	8' T5 LED	9	2	36	18
TOTAL	-	-	-	562	-	-	-	562	-	-	1,202

[illegible] E[illegible]

[redacted]

[redacted]

[redacted]

[redacted]

[redacted]

[

[illegible]

LED T5 | DIRECT REPLACEMENT

Product Features

- Easy Plug-and-Play Installation - No Rewiring Required
- Operates with Electronic Ballasts[1]
- Identical Look to Standard Fluorescent Lamp
- Full Glass Lens with 240 Degree Light Distribution
- High Efficacy with 50% Energy Savings
- DLC QPL Listed
- UL Listed for Direct Fuorescent Lamp Replacement
- 5-Year Warranty
- ETL Sanitation Listed for Food Service Applications

$90 Total Life Savings[3]

Applications

- Office Buildings/Schools
- Warehouse
- Manufacturing Facilities
- Parking Garages

Model Number[2]	Lamp Type	Base	Watts / Replaced	Lumens	CCT	MOL	Distribution	Certification	Warranty
LBT5F16xx	Plug-n-Play	G5	13W / 28W	1650 lm	3500K 4100K 5000K	45.8”	240°	UL	5-Years
LBT5F33xx	Plug-n-Play	G5	31W / 54W	3300 lm	3500K 4100K 5000K	45.8”	240°	UL/DLC	5-Years

NOTE 1: Please reference our Ballast Compatibility List
NOTE 2: Replace xx with 35 for 3500K, 41 for 4100K, and 50 for 5000K Color Temperature
NOTE 3: Savings calculated by 50,000 hour Lifetime, Electricity rated $0.12, and 3 Operating Hours Per Day.

R17D SOCKET LED LINEAR TUBE

8FT 40W

DESCRIPTION

- Two ended bypass
- Environmentally friendly without mercury
- 50,000 hours or more working time and 5 year warranty
- No mercury

WARRANTY

This product has a warranty for a period of 3 years from the date of purchase. The warranty is invalid in the case of improper installation, tampering, or removal of the Q.C. date label. Installation in an improper working environment or installation not according to the current edition of the National Electric Code also invalidates the warranty. Should this product fail during the warranty period, it will be replaced free of charge, subject to correct installation and return of the faulty unit. Greentek Energy Systems does not accept responsibility for any installation costs associated with the replacement of this product. This warranty is in addition to the statutory rights in the country of purchase. Greentek Energy Systems reserves the right to alter specifications without prior notice.

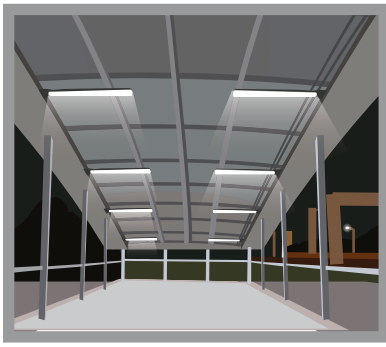

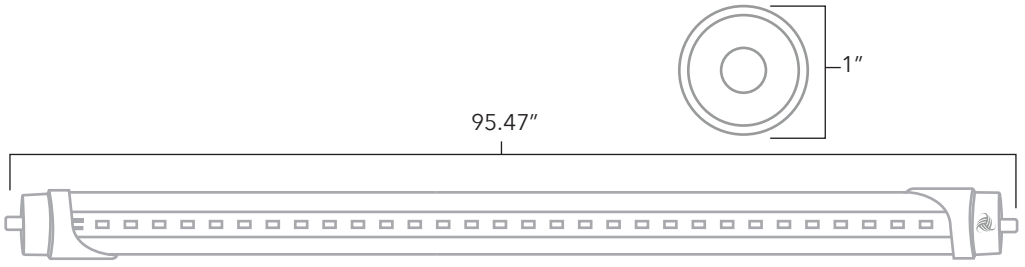

SKU					
	8FT:GT-T88F40W-R17D 5000K C 8FT:GT-T88F40W-R17D 5000K F 8FT:GT-T88F40W-R17D 6000K C 8FT:GT-T88F40W-R17D 6000K F	Certification	ETL	Lumens	4400
		Box Dimension	95.47″ x 8.27″ x 7.28″	Color	5000K, 6000K
		Watts	40W	Trim	Clear, Frosted
		Lumens efficiency	120 lm/w	CRI	> 80

R17D SOCKET LED LINEAR TUBE

8FT 40W

Input Voltage	100-277V	Warranty	3 years
Operation Temperature	-68~122 °F	Power factor	0.95
Lifespan	50,000 hours	LED type	SMD2835
Base	R17D	Wiring	Two ended bypass
Package Count	20	Housing material	Aluminum + PC
Tube Dimension	7.9′ x 1″		

WARNING

- Not for use in vapor-tight fixture
- Not for use with dimmers
- Not suitable for outdoor use
- Not suitable for high temperature or damp locations
- Not suitable for heavy air polluted locations
- Please turn off the power before replacing new bulb

CAUTION

- Risk of electric shock
- Use in dry locations only

BOX DIMENSION

- Risk of electric shock
- Use in dry locations only

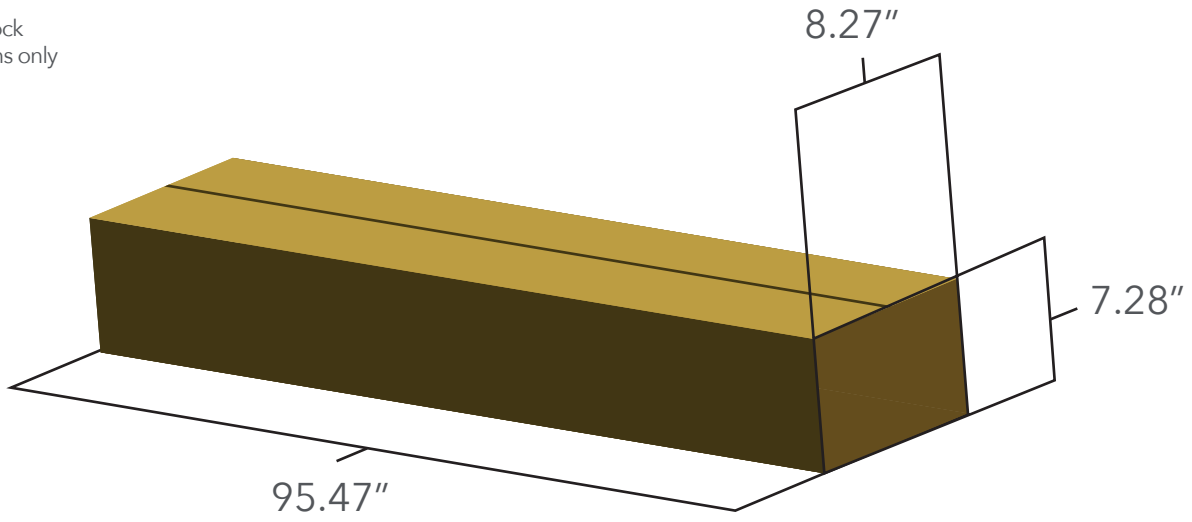

S29850

9WPLH/LED/830/DR/4P
9W LED PL 4-Pin; 3000K; 950 Lumens; G24q base; 50000 Average rated hours; 120 Deg. beam spread

S29850

Features
- Replaces 26, 32, and 42 watt CFLs
- Direct Replacement - for use with Electronic, Instant Start, Rapid Start, and Programmed Start ballasts with no rewiring required. Ballast required.
- Instant on to full brightness / no flickering
- Horizontal operation
- Up to 70% energy saving
- Long life - 50,000 hours
- 5 year warranty

*Ballast required (See Ballast Compatibility Chart)

Item Number	UPC	Watts	Fluorescent Equivalent	Lamp Shape	Base	Lamp Code	Dimmable/Non-Dimmable
S29850	045923298509	9	26, 32, and 42 watt CFL	PL	G24q	9WPLH/LED/830/DR/4P	Non-Dimmable

Finish	MOL In Inches	MOD In Inches	Initial Lumens	Average Rated Hours	Kelvin Temp	Color	CRI
Frost	6-5/8"	1-3/32"	950	50000	3000	Soft White	82

Beam Spread Deg	Operating Temperature	Package Type	CEC Status	DLC ID:	RoHS Compliant	UL or ETL Listed	UL Classification
120	-20C (-4F) to a maximum of +45C (+113F)	Box	Lawful for sale in California	PLJAGBSSPJZJ DLC Search	Yes	Yes	cULus Classified - Damp Location Rated

Warranty
5 Year Limited

ECM [illegible]

Economic Summary

ECM[illegible]
E[illegible]
A[illegible]
[illegible]
E[illegible]
E[illegible]
[illegible]
E[illegible]
[illegible]
[illegible]
M[illegible]

Existing Condition

[illegible]

[illegible]

Recommendation

[illegible]

[illegible]

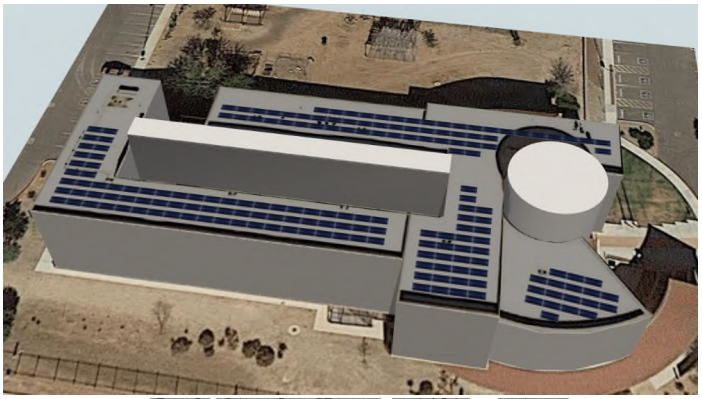

F[illegible]

[redacted]

[redacted]

[redacted]

2.2.2 Exposed solar power cables are to be installed in condui .

2.2.3 A this building has a dedicated electrical meter and account, consider tying this solar PV system into the building's electrical system.

2.2.4 I not tied directy into the building's electrical system, cable runs fom the building/array to the centralized interconnection equipment (i.e. inverters) shall be buried in underground conduits (note that all existing power cables on sie are underground).

2.2.5 All wire and cable ratngs should be coordinated with the sie's existing wires and cables and rated for greater than the maximum expected volages and amperages as required by applicable codes.

2.2.6 I is left to the contractor's discretion whether there will be micro-inverers for each sectons of panels or a central inverer(s) for the entire site's solar system.

2.3 The Pascua Yaqui Tribe will own, operate, and maintain the interconnect on equipment, including the following:

- A inverter(s) to convert the output fom DC to AC,
- Monioring equipment to determine the electrical output and panel condi ions.
- Utility metering.
- The interconnecton equipment is to be installed and programmed by the contactor.

3.0 C A ivitie

3.1 The contractor shall:

3.1. Conduct installation and functional checks to veriy the proper operation of the system.

3.2. Contractor is to utlize and complete manufacturers recommended startup forms for all equipment and provide these forms to the project team for review immediately afer completon.

3.3. Develop a systems manual that provides future operatng staff the information needed to understand and optimally operate the commissioned systems. The Systems Manual shall include the following for each commissioned system:

3.3.1. Final version of the Basis ofDesign.

3.3.2. System single line diagram.

3.3.3. Recommended schedule of maintenance requirements and fequency, if not already included in the project & M manuals.

3.3.4. A built drawing of system

3.4. The contactor is to provide training syllabus and training materials for review by the project team. Contactor to provide classroom training and feld walk-through

[illegible]

SUNNY BOY
3.0-US / 3.8-US / 5.0-US / 6.0-US / 7.0-US / 7.7-US

SB3.0-1SP-US-40 / SB3.8-1SP-US-40 / SB5.0-1SP-US-40 / SB6.0-1SP-US-40
SB7.0-1SP-US-40 / SB7.7-1SP-US-40 / SB3.0-1TP-US-40 / SB3.8-1TP-US-40
SB5.0-1TP-US-40 / SB6.0-1TP-US-40 / SB7.0-1TP-US-40 / SB7.7-1TP-US-40

Value-Added Improvements

- Superior integration with SMA's MLPE Power+ Solution
- World's first Secure Power Supply* now offers up to 2,000 W
- Full grid management capabilities ensure a utility-compliant solution for any market

Reduced Labor

- New Installation Assistant with direct access via smartphone minimizes time in the field
- Advanced communication interface with fewer components creates 50% faster setup and commissioning

Unmatched Flexibility

- SMA's proprietary OptiTrac™ Global Peak technology mitigates shade with ease
- Multiple independent MPPTs accommodate hundreds of stringing possibilities

Trouble-Free Servicing

- Two-part enclosure concept allows for simple, expedited servicing
- Equipped with SMA Smart Connected, a proactive service solution that is integrated into Sunny Portal

SUNNY BOY 3.0-US / 3.8-US / 5.0-US / 6.0-US / 7.0-US / 7.7-US

Reduce costs across your entire residential business model

The residential PV market is changing rapidly. Your bottom line matters more than ever—so we've designed a superior residential solution to help you decrease costs at every stage of your business operations. The Sunny Boy 3.0-US/3.8-US/5.0-US/6.0-US/7.0-US/7.7-US join the SMA lineup of field-proven solar technology backed by the world's #1 service team, along with a wealth of improvements. Simple design, improved stocking and ordering, value-driven sales support and streamlined installation are just some of the ways that SMA helps your business operate more efficiently. And, Sunny Boy's superior integration with the innovative Power+ Solution means installers have even more flexibility in addressing their toughest challenges. Finally, SMA Smart Connected will automatically detect errors and initiate the repair and replacement process so that installers can reduce service calls and save time and money.

Technical data	Sunny Boy 3.0-US		Sunny Boy 3.8-US		Sunny Boy 5.0-US	
	208 V	240 V	208 V	240 V	208 V	240 V
Input (DC)						
Max. PV power	4260 Wp		5396 Wp		7100 Wp	
Max. DC voltage	600 V					
Rated MPP voltage range	155 - 480 V		195 - 480 V		220 – 480 V	
MPPT operating voltage range	100 – 550 V					
Min. DC voltage / start voltage	100 V / 125 V					
Max. operating input current per MPPT	10 A					
Max. short circuit current per MPPT	18 A					
Number of MPPT tracker / string per MPPT tracker	2/1				3 / 1	
Output (AC)						
AC nominal power	3000 W	3000 W	3330 W	3800 W	5000 W	5000 W
Max. AC apparent power	3000 VA	3000 VA	3330 VA	3800 VA	5000 VA	5000 VA
Nominal voltage / adjustable	208 V / ●	240 V / ●	208 V / ●	240 V / ●	208 V / ●	240 V / ●
AC voltage range	183 – 229 V	211 – 264 V	183 – 229 V	211 – 264 V	183 – 229 V	211 – 264 V
AC grid frequency	60 Hz / 50 Hz					
Max. output current	14.5 A	12.5 A	16.0 A	16.0 A	24.0 A	24.0 A
Power factor (cos φ)	1					
Output phases / line connections	1 / 2					
Harmonics	< 4 %					
Efficiency						
Max. efficiency	97.2 %	97.6 %	97.2 %	97.5 %	97.2 %	97.5 %
CEC efficiency	96 %	96.5 %	96.5 %	96.5 %	96.5 %	97 %
Protection devices						
DC disconnect device / DC reverse polarity protection	● / ●					
Ground fault monitoring / Grid monitoring	●					
AC short circuit protection	●					
All-pole sensitive residual current monitoring unit (RCMU)	●					
Arc fault circuit interrupter (AFCI)	●					
Protection class / overvoltage category	I / IV					
General data						
Dimensions (W / H / D) in mm (in)	535 x 730 x 198 (21.1 x 28.5 x 7.8)					
Packaging dimensions (W / H / D) in mm (in)	600 x 800 x 300 (23.6 x 31.5 x 11.8)					
Weight / packaging weight	26 kg (57 lb) / 30 kg (66 lb)					
Temperature range: operating / non-operating	-25°C ...+60°C / -40°C ...+60°C					
Environmental protection rating	NEMA 3R					
Noise emission (typical)	39 dB(A)					
Internal power consumption at night	< 5 W					
Topology / Cooling concept	Transformerless / Convection					
Features						
Ethernet ports	2					
Secure Power Supply	●*					
Display (2 x 16 characters)	●					
WLAN / Sensor module / External WLAN antenna	● / ○ / ○					
Cellular (4G / 3G) / Revenue Grade Meter	○ / ○**					
Warranty: 10 / 15 / 20 years	●/○/○					
Certificates and approvals	UL 1741, UL 1741 SA incl. Rule 21 RSD, UL 1998, UL 1699B, IEEE1547, FCC Part 15 (Class A & B), CAN/CSA V22.2 107.1-1, HECO SRD-UL-1741-SA-V1.1					
● Standard features ○ Optional features – Not available Data at nominal conditions						
NOTE: US inverters ship with gray lids. * Not compatible with the Power+ Solution Shutdown functionality **Standard in SBX.X-1TP-US-40						
Type designation	SB3.0-1SP-US-40 / SB3.0-1TP-US-40		SB3.8-1SP-US-40 / SB3.8-1TP-US-40		SB5.0-1SP-US-40 / SB5.0-1TP-US-40	

Accessories

Sensor module
MD.SEN-US-40

External WLAN antenna
EXTANT-US-40

SMA Rooftop
Communication Kit
ROOFCOMMKIT-P2-US

Revenue Grade
Meter Kit
RGM05KIT-US-10

Cellular Modem Kit
CELLMODKIT-US-10

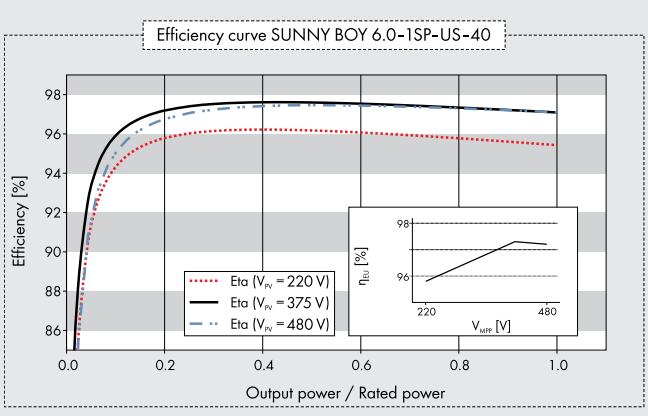

Technical data	Sunny Boy 6.0-US		Sunny Boy 7.0-US		Sunny Boy 7.7-US	
	208 V	240 V	208 V	240 V	208 V	240 V
Input (DC)						
Max. PV power	8520 Wp		9940 Wp		10905 Wp	
Max. DC Voltage	600 V					
Rated MPP Voltage range	220 – 480 V		245 - 480 V		270 - 480 V	
MPPT operating voltage range	100 – 550 V					
Min. DC voltage / start voltage	100 V / 125 V					
Max. operating input current per MPPT	10 A					
Max. short circuit current per MPPT	18 A					
Number of MPPT tracker / string per MPPT tracker	3 / 1					
Output (AC)						
AC nominal power	5200 W	6000 W	6660 W	7000 W	6660 W	7680 W
Max. AC apparent power	5200 VA	6000 VA	6660 VA	7000 VA	6660 VA	7680 VA
Nominal voltage / adjustable	208 V / ●	240 V / ●	208 V / ●	240 V / ●	208 V / ●	240 V / ●
AC voltage range	183 – 229 V	211 – 264 V	183 – 229 V	211 – 264 V	183 – 229 V	211 – 264 V
AC grid frequency	60 Hz / 50 Hz					
Max. output current	25.0 A	25.0 A	32.0 A	29.2 A	32.0 A	32.0 A
Power factor (cos φ)	1					
Output phases / line connections	1 / 2					
Harmonics	< 4 %					
Efficiency						
Max. efficiency	97.2 %	97.6 %	97.1 %	97.5 %	97.1 %	97.5 %
CEC efficiency	96.5 %	97 %	96.5 %	97 %	96.5 %	97 %
Protection devices						
DC disconnect device / DC reverse polarity protection	● / ●					
Ground fault monitoring / Grid monitoring	●					
AC short circuit protection	●					
All-pole sensitive residual current monitoring unit (RCMU)	●					
Arc fault circuit interrupter (AFCI)	●					
Protection class / overvoltage category	I / IV					
General data						
Dimensions (W / H / D) in mm (in)	535 x 730 x 198 (21.1 x 28.5 x 7.8)					
Packaging Dimensions (W / H / D) in mm (in)	600 x 800 x 300 (23.6 x 31.5 x 11.8)					
Weight / packaging weight	26 kg (57 lb) / 30 kg (66 lb)					
Temperature range: operating / non-operating	-25°C ...+60°C / -40°C ...+60°C					
Environmental protection rating	NEMA 3R					
Noise emission (typical)	39 dB(A)		45 dB(A)			
Internal power consumption at night	< 5 W					
Topology / Cooling concept	Transformerless / Convection		Transformerless / Fan			
Features						
Ethernet ports	2					
Secure Power Supply	●*					
Display (2 x 16 characters)	●					
WLAN / Sensor module / External WLAN antenna	● / o / o					
Cellular (4G / 3G) / Revenue Grade Meter	o / o**					
Warranty: 10 / 15 / 20 years	●/o/o					
Certificates and approvals	UL 1741, UL 1741 SA incl. Rule 21 RSD, UL 1998, UL 1699B, IEEE1547, FCC Part 15 (Class A & B), CAN/CSA V22.2 107.1-1, HECO SRD-UL-1741-SA-V1.1					
● Standard features o Optional features – Not available Data at nominal conditions NOTE: US inverters ship with gray lids. * Not compatible with the Power+ Solution Shutdown functionality						
NOTE: US inverters ship with gray lids. * Not compatible with the Power+ Solution Shutdown functionality **Standard in SBX.X-1TP-US-40						
Type designation	SB6.0-1SP-US-40 / SB6.0-1TP-US-40		SB7.0-1SP-US-40 / SB7.0-1TP-US-40		SB7.7-1SP-US-40 / SB7.7-1TP-US-40	

POWER+ SOLUTION

The SMA Power+ Solution combines legendary SMA inverter performance and intelligent DC module-level electronics in one cost-effective, comprehensive package. This means that you can achieve maximum solar power production for your customers while also realizing significant installation savings.

NEW! Advanced communication interface allows for 50% faster setup and commissioning thanks to reduced components and a simplified process.

Visit www.SMA-America.com for more information.

SIMPLE, FLEXIBLE DESIGN

Speed the completion of customer proposals and maximize the efficiency of your design team with the Sunny Boy-US series, which provides a new level of flexibility in system design by offering:

» Hundreds of stringing configurations and multiple independent MPPTs

» SMA's proprietary OptiTrac™ Global Peak shade mitigation technology

» Diverse application options including on- and off-grid compatibility

VALUE-DRIVEN SALES ENABLEMENT

SMA wants to enable your sales team by arming them with an abundance of feature/benefit support. Show your customers the value of the Sunny Boy-US series by utilizing:

» Secure Power Supply, now with 2,000 W of opportunity power in the event of a grid outage, as an increased value-add or upsell opportunity

» SMA's 35 year history and status as the #1 global inverter manufacturer instills homeowners with peace of mind and the long-term security they demand from a PV investment

» An economical solution for shade mitigation and the challenges of complex roofs

IMPROVED STOCKING AND ORDERING

Ensure that your back office business operations run smoothly and succinctly while mitigating potential errors. The Sunny Boy-US series can help achieve cost savings in these areas by providing:

» An integrated DC disconnect that simplifies equipment stocking and allows for a single inverter part number

» All communications integrated into the inverter, eliminating the need to order additional equipment

STREAMLINED INSTALLATION AND COMMISSIONING

Expedite your operations in the field by taking advantage of the new Sunny Boy's installer-friendly feature set including:

» Direct access via smartphone and utilization of SMA's Installation Assistant, which minimizes time/labor spent in the field and speeds the path to commissioning

» Simple commissioning and monitoring setup in a single online portal

» New! Advanced communication interface with fewer components allows for 50% faster commissioning

SUPERIOR SERVICE

SMA understands the factors that contribute to lifetime PV ownership cost, that's why the Sunny Boy-US series was designed for maximum reliability and backstopped by an unmatched service offering. Benefit from:

» SMA Smart Connected, a proactive service solution integrated into Sunny Portal that automatically detects errors and initiates the repair and replacement process

» The #1 service team in the PV industry, as recognized by IMS research, with experience servicing an installed base of more than 55 GW

SB3.0-7-US-DUS184327 SMA and Sunny Boy are registered trademarks of SMA Solar Technology AG. Printed on FSC-certified paper. All products and services described as well as technical data are subject to change, even for reasons of country-specific deviations, at any time without notice. SMA assumes no liability for errors or omissions. For current information, see www.SMA-Solar.com.

LG
Life's Good

LG PRODUCT WARRANTY
25 YEAR
15 YEARS LONGER THAN INDUSTRY STANDARD OF 10 YEARS

LG NeON® 2

LG400/405N2W-V5

THE 72 CELL POWER HOUSE

UP TO 19.5% MODULE EFFICIENCY

Awards Received By LG Solar™

EUPD RESEARCH TOP BRAND PV MODULES AUSTRALIA 2019
EUPD RESEARCH TOP BRAND PV MODULES AUSTRALIA 2018
EUPD RESEARCH TOP BRAND PV MODULES AUSTRALIA 2017
EUPD RESEARCH TOP BRAND PV MODULES AUSTRALIA 2016
inter solar award 2016 WINNER
inter solar award 2015 WINNER
inter solar award 2013 WINNER

THE NeON® 2 72 CELL - 405W - THE PANEL OF THE FUTURE AVAILABLE TODAY

The new LG NeON® 2 72 cell has seen many improvements, from longer warranties and higher efficiency to more busbars. This panel is ideal for commercial systems or solar farms seeking an efficient use of space and a high quality panel with great output efficiency.

The new NeON® 2 with 72 cells adopts the award winning CELLO Technology replacing 3 busbars in each cell with 12 thin wires to enhance power output. This technology sets a new standard for innovation and was recognised with the 2015 Photovoltaic Innovation Award at the Intersolar Industry Event in Germany. LG also won the 2016 Intersolar award for our new NeON® Bifacial range.

More Power per Square Metre

LG NeON® 2's 405W are a similar physical size to many conventional 320W 72 cell panels. This means with the LG NeON® 2 405W you get 26% more electricity per square metre than a 320W panel. So you can install more kW of solar on your roof with the LG NeON® 2.

25 Years Product Warranty (Parts & Labour)

LG has extended the product warranty of the LG NeON® 2 by an additional 15 years from industry average 10 to 25 years. This includes coverage for labour and transport.

Improved High Temperature Performance

Solar panels slowly lose ability to generate power as they get hotter. LG NeON® 2, has an improved temperature co-efficient of -0.36%/°C to our previous model and to the majority of competitor models which means in high temperatures LG NeON® 2 panels will deliver higher output.

Improved 25 Year Performance Warranty

The initial degradation of cells has been improved from -3% to -2%, in the 1st year and the annual rate of degradation has fallen from -0.7%/year to -0.35%/ year thereafter. This brings an 89.6% warranted output at 25 years, compared to 80.2% for many competing panels.

Made in Korea

www.lgenergy.com.au

LG NeON® 2 - 72 Cell

ABOUT LG SOLAR

LG Electronics embarked on a solar energy research programme in 1985, using our vast experience in semi-conductors, chemistry and electronics. LG Solar modules are now available in 32 countries. In 2013, 2015 and 2016 the LG NeON® range won the acclaimed Intersolar Award in Germany, which demonstrates LG Solar's lead in innovation and commitment to the renewable energy industry. Additionally, LG Solar™ won the Australian Top Brand award in 2016, 2017 and 2018.

With over 200 lesser known brand panels selling in Australia, LG solar panels offer a peace of mind solution, as they are backed by an established global brand.

KEY FEATURES

Proven Field Performance

LG has been involved in a number of comparison tests of the LG panels against many other brand panels. LG NeON® models are consistently among the best performing in these tests.

Additional Certification

LG NeON® 2 panels have received additional certification including for, Salt Mist Corrosion to maximum severity 6. Ammonia Resistance certification and PID Resistance Tests.

Strict Quality Control Reliable for the Future

The quality control of LG world-class production processes is monitored and improved to Six Sigma quality control standards, which includes 500+ monitoring points to effectively maintain and improve our uncompromising standards.

Multi Anti-reflective Coatings Increase Output

LG Solar™ is using an anti-reflective coating on the panels glass as well as on the cell surface to ensure more light is absorbed in the panel and not reflected. More absorbed light means more electricity generation.

Installation Time Savings

This NeON® 2 - 72 cell panel can reduce installation time for commercial systems, as there are less panels required eg. to install a 3.2 MW system one would need 8,000 LG400W instead of 10,000 of a 320W – 72 cell panel. There will also be significant savings in design, transport, labour, rails and cabling and 20% less space required.

"CELLO" Technology Increases Power

"CELLO" Multi wire busbar cell technology lowers electrical resistance and increases panel efficiency, giving more power per panel and provides a more uniform look to the panel.

Low LID

The N-type doping of the NeON® cells results in extremely low Light Induced Degradation (LID) when compared with the standard P-type cells. This means more electricity generation over the life of the panel as the panel degrades less.

Extensive Testing Programme

LG solar panels are tested between 2 to 3 times the International Standards at our in-house testing laboratories, ensuring a very robust and longer lasting solar module.

Double-Sided Cell Structure

In conventional panels the cells produce energy from the front only. The NeON® Cell produces energy from both the front as well as the back of the cell. This innovative technology allows the absorption of light from behind the panel which raises the panel's efficiency and electricity output.

Positive Tolerance (0/+3%)

If we sell you a 400 Watt panel then the flash test of this panel will show somewhere between 400W and 412.1W. Some competitor panels have -/+ tolerance, so you could get a flash test result below the rated Watt, meaning you pay for Watts you never get.

Excellent low light performance

LG NeON 2 panels will give better performance under low light, such as early morning or late afternoon compared to many competing panels.

Automated Production in South Korea

All LG solar panels are manufactured in a custom designed and fully automated production line by LG in Gumi, South Korea ensuring extremely low tolerances. This means great quality and build consistency between panels.

LG NeON® 2 72 cell– INNOVATIVE, CLEVER, HIGH EFFICIENT

LG NeON® 2 72 cell solar modules now offer even more performance. Featuring LG's 12 wire busbar CELLO Technology for improved performance and reliability, it can also withstand a static front panel load of 5,400 pascals. LG has extended its product warranty from 10 to 25 years and improved its linear performance guarantee to at least 89.6% of nominal output after 25 years.

LOCAL WARRANTY, GLOBAL STRENGTH

LG Solar™ is part of LG Electronics Inc., a global and financially strong company, with over 50 years of experience in technology.

Good to know: LG Electronics Australia Pty Ltd is the warrantor in Australia and NZ for your solar modules. So LG support, via offices in every Australian mainland state and NZ and through our 70 strong, Australia wide dealer network, is only a phone call away.

The Warrantor's 2017 Global Sales in Billions of US Dollars

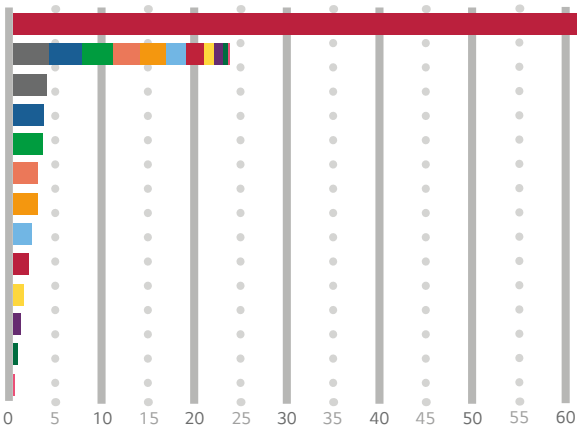

LG Electronics	$61.4bn
All below combined	$23.7bn
Jinko Solar*	$3.9bn
Trina Solar*	$3.5bn
Canadian Solar*	$3.4bn
First Solar*	$2.9bn
JA Solar*	$2.9bn
Hanwha Q Cells*	$2.2bn
Sunpower*	$1.9bn
Yingli*	$1.2bn
Suntech*	$0.9bn
REC Solar*	$0.6bn
Winaico/Win Win Precision Tech*	$0.15bn

*2017 Annual Financial Statements.

HIGHER OUTPUT, HIGHER YIELD

The NeON® Cell produces energy from both the front and the back of the cell. This innovative approach allows the absorption of light from the back of the cell which raises the panel's efficiency and power output. Standard panels only absorb light from the front.

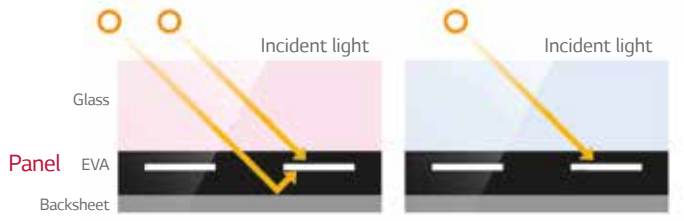

LG NeON® 2 module | Standard module

EXCELLENT QUALITY, THOROUGHLY TESTED

You can rely on LG. We test our products with at least double the intensity specified in the IEC standard. (International Quality Solar Standard).

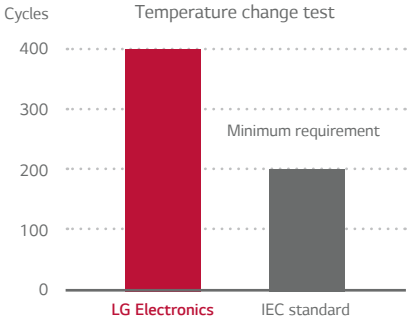

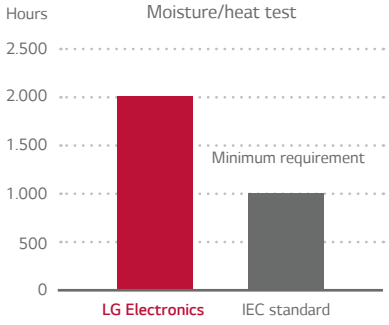

Awards Received By LG Solar™

Our panel range have won a string of International Awards.

GREAT WARRANTY

If you buy an LG panel and should there be a warranty issue you will deal with LG Electronics Australia/NZ. You will not have to worry if the importer is still in operation or the manufacturer is located overseas. We are only one phone call away. LG Electronics Australia/NZ backs your product. That's peace of mind. Contact us on solar.sales@lge.com.au or ph 61-2-88054038.

LG offers a 15 year longer product warranty for parts and labour than many competitors 10 years to an impressive 25 years.

10yrs +15yrs

LG NeON® 2 - 72 Cell

Mechanical Properties

Cells	6 x 12
Cell Vendor	LG
Cell Type	Monocrystalline / N-type
Cell Dimensions	161.7 x 161.7 mm
# of Busbar	12 (Multi Wire Busbar)
Dimensions (L x W x H)	2024 x 1024 x 40 mm
Front Load	5400 Pa
Rear Load	3000 Pa
Weight	20.3 kg
Connector Type	Genuine MC4, IP68 (Male: PV-KST4) (Female: PV-KBT4)
Junction Box	IP68 with 3 bypass diodes
Length of Cables	2 x 1200 mm
Front cover	High transmission tempered glass
Frame	Anodised aluminum

Certifications and Warranty

Certifications	ISO 9001, ISO 14001, ISO 50001
	IEC 61215-1/-1-1/2:2016, IEC 61730-1/-2:2016, UL1703
	OHSAS 1001, PV CYCLE
	IEC 61701:2012 Severity 6 (Salt Mist Corrosion Test)
	IEC 62716:2013 (Ammonia Test)
Module Fire Rating	Class C (UL 790, ULC/ORD C 1703)
Product Warranty	25 Years
Output Warranty of Pmax (Measurement Tolerance ± 3%)	Linear Warranty[1]

[1] 1) 1st year: 98%, 2) After 1st year: 0.35% annual degradation, 3) 89.6% for 25 years

Temperature Characteristics

NMOT	42 ± 3 °C
Pmax	-0.36 %/°C
Voc	-0.26 %/°C
Isc	0.02 %/°C

Characteristic Curves

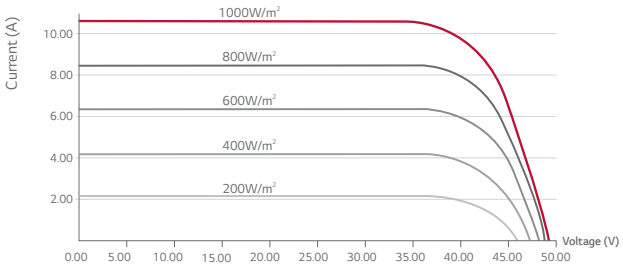

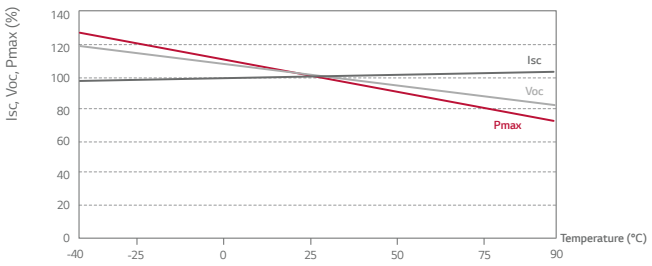

Electrical Properties (STC[2])

Module Type	400 W	405 W
Maximum Power Pmax (W)	400	405
MPP Voltage Vmpp (V)	40.6	41.0
MPP Current Impp (A)	9.86	9.89
Open Circuit Voltage Voc (V)	49.3	49.4
Short Circuit Current Isc (A)	10.47	10.51
Module Efficiency (%)	19.3	19.5
Operating Temperature (°C)	-40 ~ +90	
Maximum System Voltage (V)	1000 (IEC) / 1500 (UL)	
Maximum Series Fuse Rating (A)	20	
Power Tolerance (%)	0 ~ +3	

[2] STC (Standard Test Condition): Irradiance 1000 W/m², Module Temperature 25 °C, AM 1.5.
The nameplate power output is measured and determined by LG Electronics at its sole and absolute discretion.

Electrical Properties (NMOT[3])

Module Type	400 W	405 W
Maximum Power Pmax (W)	300	304
MPP Voltage Vmpp (V)	38.0	38.4
MPP Current Impp (A)	7.88	7.91
Open Circuit Voltage Voc (V)	46.5	46.6
Short Circuit Current Isc (A)	8.40	8.44

[3] NMOT (Nominal Module Operating Temperature): Irradiance 800 W/m², ambient temperature 20 °C, wind speed 1 m/s, Spectrum AM 1.5.

Dimensions (mm)

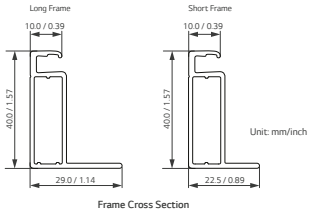

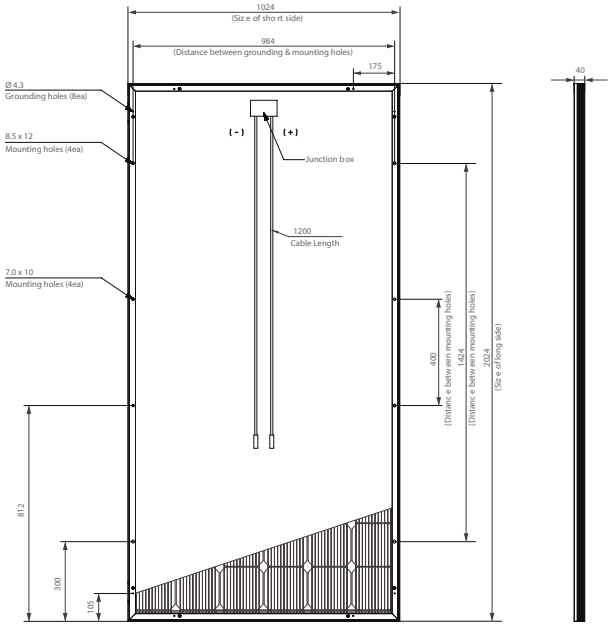

* The distance between the center of the mounting/grounding holes.

LG Life's Good

LG Electronics Australia Pty Ltd
Solar Business Group
2 Wonderland Drive, Eastern Creek, NSW 2766
Ph: (02) 88054038
E-Mail: solar.sales@lge.com.au
Web:lgenergy.com.au

LG Electronics Inc.
Solar Business Division
Twin Building, Western Tower, 11F,
128, Yeoui-daero, Yeongdeungpo-gu,
Seoul, 07336, Korea
www.lg.com/global/business

Product specifications are subject to change without prior notice.
Date: 12/2018

Copyright © 2018 LG Electronics.
All rights reserved.

ROCK GAP
Energy Services

E[redacted] A[redacted]

[redacted] [redacted] H[redacted] B[redacted]

[redacted] [redacted] [redacted]

[redacted] [redacted]

[redacted] [redacted]

[redacted] [redacted]

[redacted] G[redacted]

[redacted] [redacted]

[redacted] [redacted] G[redacted] E[redacted]

[redacted] E[redacted] LEED A[redacted]

J[redacted] L[redacted] [redacted] MCBC[redacted] CEM

M[redacted] [redacted]

New Mexico
3737 Princeton St NE, Ste 100, Albuquerque, NM 87107
T: (505) 344.2366 ◆ F: (505) 213.0563

Arizona
1921 S. Alma School Road Ste. 212, AZ 85210
T: (480) 834.5717 ◆ F: (480) 834.5718

Table of Contents

Executive Summary 3

1.0 Introduction 5

2.0 Facility Description 9

3.0 Historical Energy Consumption Analysis 11

4.0 Summary of Potential Energy Savings by System 20

5.0 Energy Conservation Measures 26

6.0 Measures for Future Consideration 36

7.0 Measures Not Feasible 39

8.0 Next Steps 39

APPENDICES

Appendix 1 Calculations and Cost Estimates

E

I EC G E H B

- D
- A
- AHAE II

B J D

	A C	A C
E D		
E D		
G		
M C MC		A
A E C		

EC ECM H B I ECM

A	E	C	
E D			
E D			
G			
			A
M C MC		A	
A C			
E I			
C			

EC

- I L
- L F F
- E L
- C
- C
-

[illegible] [illegible] [illegible] [

INTRODUCTION

IN THE FOLLOWING SECTIONS, THE RESULTS OF THE ENERGY ASSESSMENT ARE PRESENTED. THE GOAL OF THE ENERGY ASSESSMENT IS TO IDENTIFY ENERGY CONSERVATION MEASURES (ECMS) THAT WILL REDUCE THE HOME'S ENERGY CONSUMPTION AND ENERGY COSTS. THE ECMS ARE PRIORITIZED BASED ON THEIR COST-EFFECTIVENESS AND IMPACT ON COMFORT AND HEALTH. THE ECMS ARE DESCRIBED IN DETAIL IN THE FOLLOWING SECTIONS.

ENERGY CONSERVATION MEASURES (ECMS)

THE FOLLOWING ECMS HAVE BEEN IDENTIFIED AS COST-EFFECTIVE AND WILL IMPROVE THE COMFORT AND HEALTH OF THE HOME. ENERGY CONSERVATION MEASURES (ECMS) ARE LISTED IN ORDER OF PRIORITY.

ALL ECMS ARE COST-EFFECTIVE AND WILL REDUCE THE HOME'S ENERGY CONSUMPTION AND ENERGY COSTS. THE ECMS ARE PRIORITIZED BASED ON THEIR COST-EFFECTIVENESS AND IMPACT ON COMFORT AND HEALTH. THE ECMS ARE DESCRIBED IN DETAIL IN THE FOLLOWING SECTIONS.

[illegible]

EVALUATED BUT NOT RECOMMENDED ECM SUMMARY

ECM #	M[illegible]	[illegible] C[illegible]	I[illegible] C[illegible]	E[illegible] I[illegible]	I[illegible] C[illegible]	[illegible] I[illegible]	E[illegible]	A[illegible] E[illegible] C[illegible]	E[illegible] D[illegible]	E[illegible] D[illegible] C[illegible]	G[illegible] C[illegible]	G[illegible] C[illegible]	[illegible]	[illegible]	A[illegible] E[illegible] MMB[illegible]
[illegible]	ECM[illegible]	[illegible]	[illegible]	[illegible]	[illegible]	[illegible]	[illegible]	[illegible]	[illegible]	[illegible]	[illegible]	[illegible]	[illegible]	[illegible]	[illegible]
[illegible]	ECM[illegible]	[illegible]	[illegible]	[illegible]	[illegible]	[illegible]	[illegible]	[illegible]	[illegible]	[illegible]	[illegible]	[illegible]	[illegible]	[illegible]	[illegible]
[illegible]	ECM[illegible]	[illegible]	[illegible]	[illegible]	[illegible]	[illegible]	[illegible]	[illegible]	[illegible]	[illegible]	[illegible]	[illegible]	[illegible]	[illegible]	[illegible]
[illegible]	ECM[illegible]	[illegible]	[illegible]	[illegible]	[illegible]	[illegible]	[illegible]	[illegible]	[illegible]	[illegible]	[illegible]	[illegible]	[illegible]	[illegible]	[illegible]
[illegible]	ECM[illegible]	[illegible]	[illegible]	[illegible]	[illegible]	[illegible]	[illegible]	[illegible]	[illegible]	[illegible]	[illegible]	[illegible]	[illegible]	[illegible]	[illegible]
[illegible]	ECM[illegible]	[illegible]	[illegible]	[illegible]	[illegible]	[illegible]	[illegible]	[illegible]	[illegible]	[illegible]	[illegible]	[illegible]	[illegible]	[illegible]	[illegible]
	A[illegible]	[illegible]	[illegible]	[illegible]	[illegible]	[illegible]	[illegible]	[illegible]	[illegible]	[illegible]	[illegible]	[illegible]	[illegible]	[illegible]	[illegible]

EVALUATED BUT NOT RECOMMENDED ECM SUMMARY

ECM #	M[illegible]	[illegible] C[illegible]	I[illegible] C[illegible]	E[illegible] I[illegible]	I[illegible] C[illegible]	[illegible] I[illegible]	E[illegible]	A[illegible] E[illegible] C[illegible]	E[illegible] D[illegible]	E[illegible] D[illegible] C[illegible]	G[illegible] C[illegible]	G[illegible] C[illegible]	[illegible]	[illegible]	A[illegible] E[illegible] MMB[illegible]
[illegible]	ECM[illegible] L[illegible] M[illegible]	[illegible]	[illegible]	[illegible]	[illegible]	[illegible]	[illegible]	[illegible]	[illegible]	[illegible]	[illegible]	[illegible]	[illegible]	[illegible]	[illegible]
[illegible]	ECM[illegible] DH[illegible] H[illegible]	[illegible]	[illegible]	[illegible]	[illegible]	[illegible]	[illegible]	[illegible]	[illegible]	[illegible]	[illegible]	[illegible]	[illegible]	[illegible]	[illegible]
	A[illegible]	[illegible]	[illegible]	[illegible]	[illegible]	[illegible]	[illegible]	[illegible]	[illegible]	[illegible]	[illegible]	[illegible]	[illegible]	[illegible]	[illegible]

Savings Summary	Energy Cost ($/yr)	Electric (kWh/year)	Electric Demand (kW)	Natural Gas (therms/year)	Water (gal/year)	Mg CO2-e (metric tons)
Savings	$34,523	355,669	47	(113)	185,499	168
Annual Use	$65,900	506,240	195	2,595	N/A	253
% Reduction	**52.4%**	**70.3%**	**24.2%**	**-4.3%**	**N/A**	**66.2%**
New Annual Use	$31,377	150,571	147	2,708	N/A	86
Cost savings by fuel		$23,382	$10,028	-$186	$1,298	

[illegible] C[illegible] F[illegible]

Utility	Energy Conversion		GHG Emissions	
	Unit	to Btu	Mg (Metric Tons)	Unit
Electric	kWh	3,412	0.0004734	CO2e/kWh
Natural Gas	therm	100,000	0.0053060	CO2e/therm

Exam Application

Thank you for your interest in becoming a certified HVAC technician. Please complete this application and submit it along with the required documentation and payment. Incomplete applications will not be processed.

Please check the box next to the exam you are applying for:

- ☐ Air Handler Installer
- ☐ Duct Fabricator
- ☐ Heat Pump Specialist
- ☐ Refrigeration Technician
- ☐ Light Commercial
- ☐ Master
- ☐ Journeyman

Before submitting your application, please make sure you have met the following requirements:

- ☐ I have read the candidate handbook and understand the exam content.
- ☐ I have completed the required training hours.
- ☐ I have enclosed a copy of my training certificate.
- ☐ I have enclosed a copy of my valid driver's license.
- ☐ I have enclosed the exam fee payment.
- ☐ I understand that my application will be void if any information is found to be false.

Mailing Address

Please provide your mailing address. This is where your exam results and certification will be sent.

- Email Address
- Phone Number
- Fax Number
- Mailing Address
- Apt/Suite/Unit
- City, State, Zip Code
- Employer Name
- Employer Address
- Employer Phone Number

[illegible] D[illegible]

[illegible] E[illegible] A[illegible] C[illegible] M[illegible] E[illegible] C[illegible] M[illegible] C[illegible] I[illegible] D[illegible]

E[illegible] A[illegible] [illegible] E[illegible] A[illegible] C[illegible] E[illegible] A[illegible]

C[illegible] [illegible] C[illegible]

[illegible] M[illegible] [illegible] M I[illegible] [illegible] M I[illegible]

A[illegible] E[illegible] C[illegible] M[illegible] (ECM[illegible] ECM[illegible]

A[illegible] M[illegible] I[illegible] M I[illegible] C[illegible] M I[illegible] A[illegible] M I[illegible]

[illegible] L[illegible] A[illegible]

[illegible]	A[illegible]
B[illegible] H[illegible] C[illegible]	BH[illegible]
H[illegible] L[illegible]	B[illegible]
C[illegible]	[illegible]
F[illegible]	[illegible]
G[illegible]	[illegible]
G[illegible] G[illegible]	[illegible]
M[illegible] H[illegible]	[illegible]
[illegible] B[illegible]	[illegible]
K[illegible] H[illegible]	[illegible]
[illegible]	[illegible]

[illegible]	A[illegible]
M[illegible] M[illegible] C[illegible]	M[illegible]
M[illegible] C[illegible]	M[illegible]
M[illegible]	MMB[illegible]
[illegible] F[illegible]	[illegible]
[illegible]	CCF
[illegible]	[illegible]
[illegible]	[illegible]

[redacted] F[redacted] D[redacted]

[redacted]

[redacted] B[redacted] D[redacted]

[redacted] H[redacted] B[redacted] [redacted] [redacted] [

[redacted] H[redacted] AC C[redacted]

[redacted] [redacted] [redacted] [redacted] [redacted] H[redacted] AC [redacted] [redacted] [redacted] [redacted]

[illegible] D[illegible] [illegible] H[illegible] [illegible]

D[illegible] [illegible] [illegible] [

[illegible] E[illegible] [illegible] H[illegible]

B[illegible] [illegible] [illegible] [illegible] [illegible] [illegible] [illegible] [illegible] [illegible] [illegible] [illegible] [illegible] [illegible] [illegible] C[illegible] [illegible] [illegible] [illegible] [illegible] [illegible] [illegible] [illegible] [illegible] [illegible] [illegible] [illegible] [illegible]

[illegible] H[illegible] E[illegible] [illegible] [illegible] C[illegible]

[illegible] [illegible] [illegible] [illegible] [illegible] [illegible] [illegible] [illegible] [illegible] [illegible] [illegible] [illegible] [illegible] [

[illegible] E[illegible] C[illegible] D[illegible] L[illegible] F[illegible]

[illegible] CDD[illegible] HDD[illegible] J[illegible] D[illegible]

G[illegible] E[illegible]

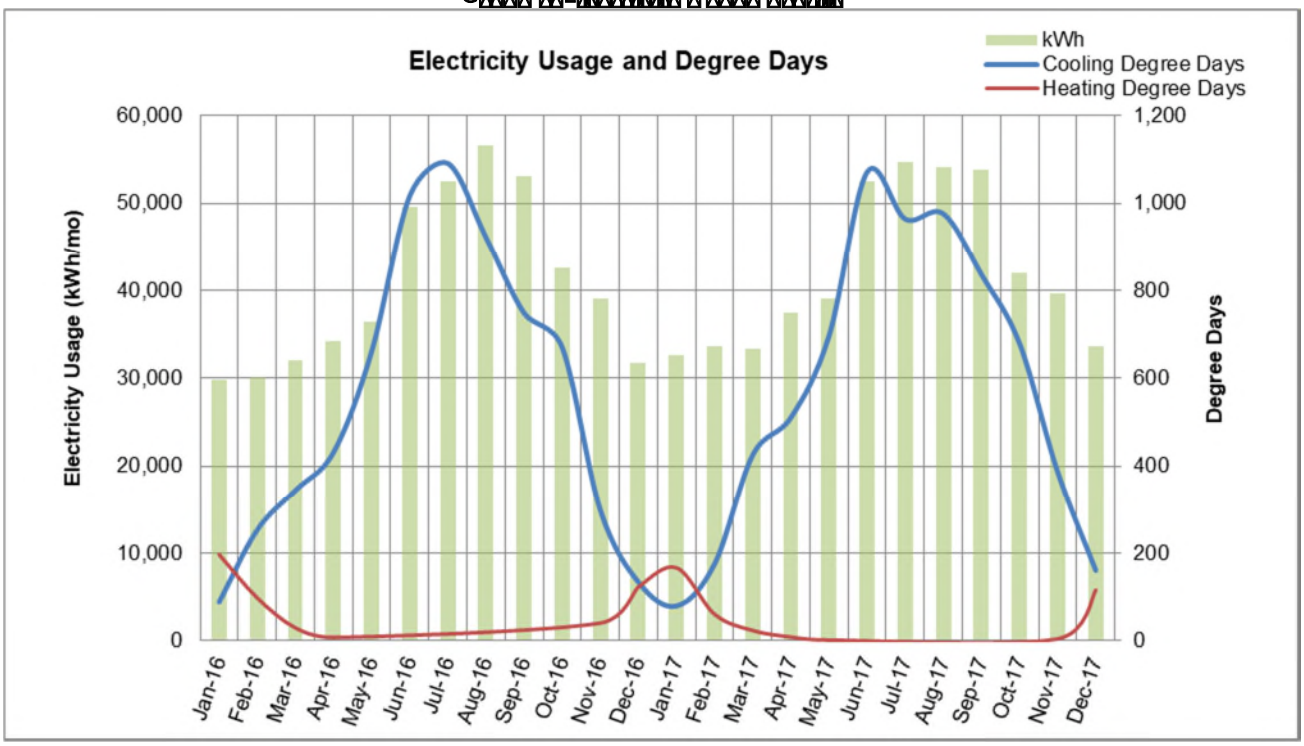

C[illegible] [illegible] [illegible] [

G[illegible] L[illegible] F[illegible]

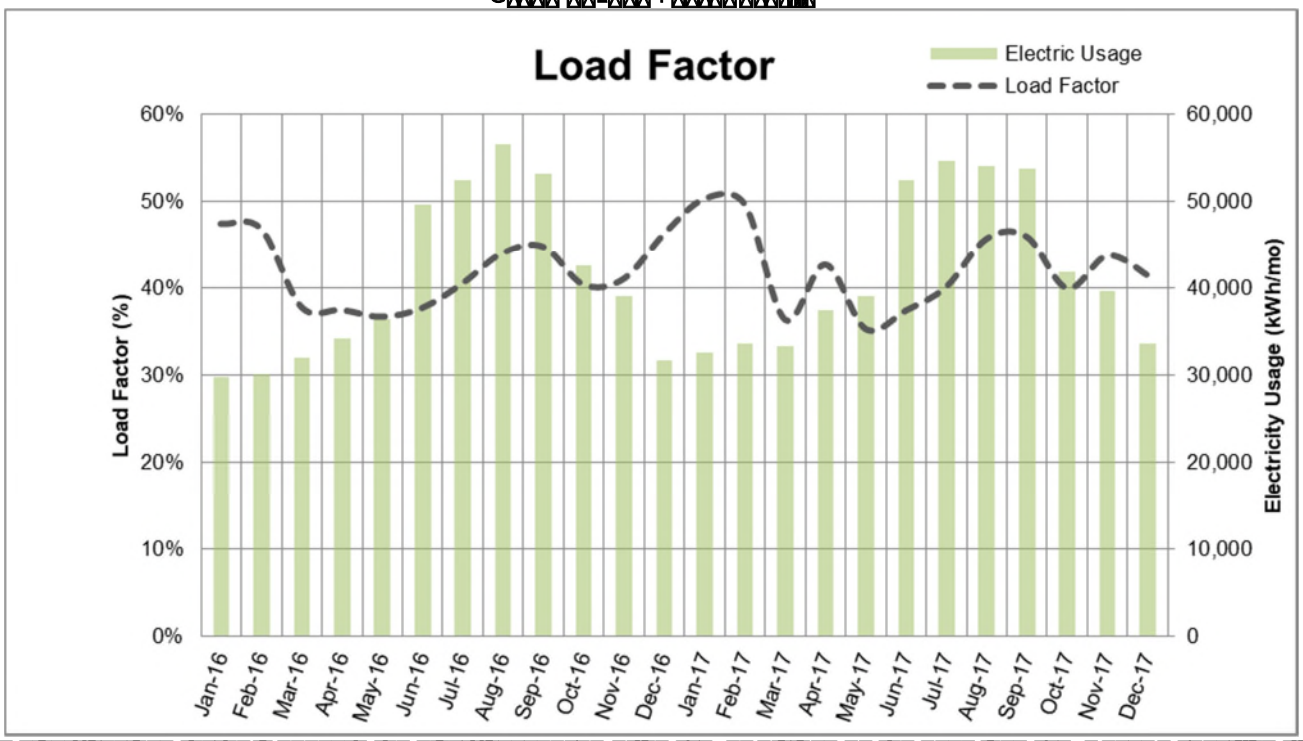

[illegible]

$$Load\ Factor\ = \frac{Monthly\ Consumption\ (kWh)}{Peak\ Demand\ (kW)\ \times Days\ per\ Month\ \times 24\ hours\ per\ day}$$

A [illegible] A [illegible] E[illegible] B[illegible]

[illegible] C[illegible] C[illegible] B[illegible]

[illegible] C[illegible]

[illegible] G[illegible] C[illegible]

[illegible] [illegible] [illegible] [

[illegible] E[illegible] I[illegible] C[illegible]

Energy Consumption			
Energy Source			kBtu
Electric	506,240	kWh	1,727,291
Natural Gas	2,595	therm	259,500
Total	1,986,791		kBtu
Bldg. Area	39,200	ft2	
EUI	**50.7**	**(kBtu/ft2/ Yr)**	

[illegible] E[illegible] D[illegible]

E[illegible] D[illegible] F[illegible]

[illegible] C[illegible]

G[illegible] E[illegible] D[illegible]

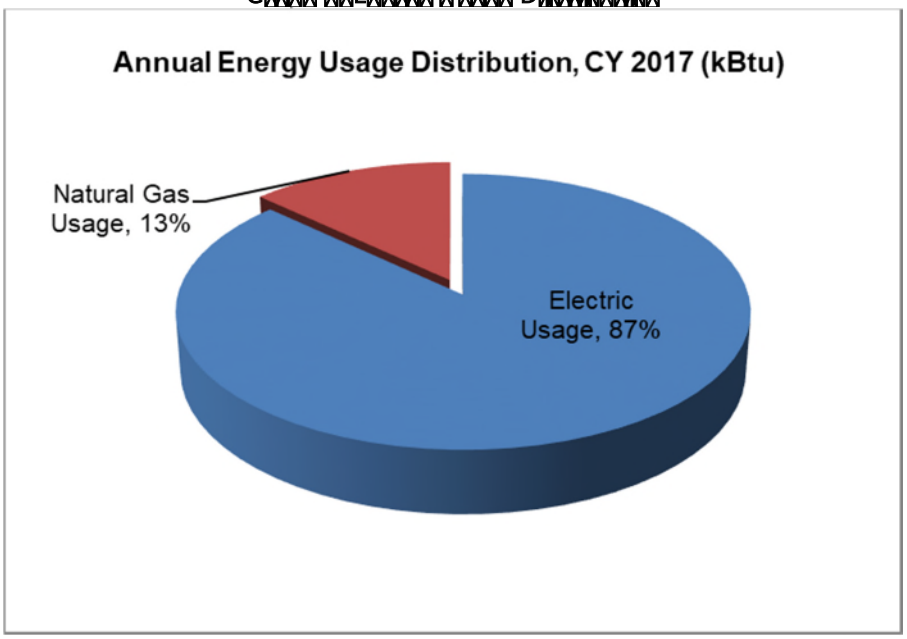

[illegible] E[illegible] C[illegible] D[illegible] [illegible] F[illegible]

D[illegible] [illegible] [illegible] [

G[illegible] E[illegible] E[illegible] D[illegible]

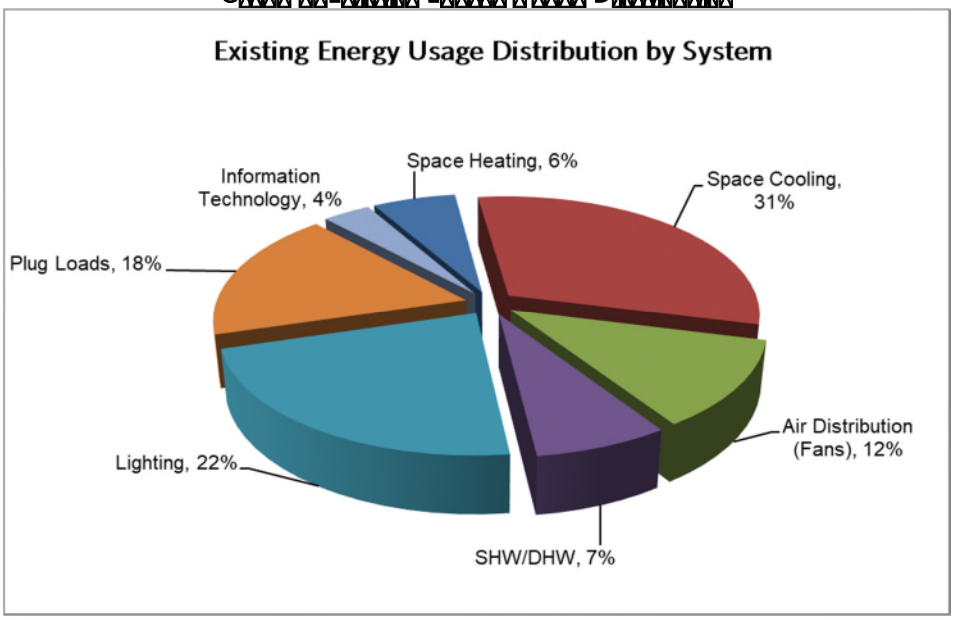

[illegible] E[illegible] E[illegible] D[illegible]

End Use	Electric (kWh/yr)	Natural Gas (therm/yr)	Total Site Energy Use (MMBtu/yr)	% of Total Electric Usage	% of Total Natural Gas Usage	% of Total Energy Usage
Space Heating	3,023	1,135	124	1%	44%	6%
Space Cooling	180,723	0	617	36%	0%	31%
Air Distribution (Fans)	68,584	0	234	14%	0%	12%
Water Distribution (Pumps)	0	0	0	0%	0%	0%
SHW/DHW	0	1,460	146	0%	56%	7%
Lighting	129,965	0	443	26%	0%	22%
Plug Loads	103,018	0	351	20%	0%	18%
Information Technology	20,931	0	71	4%	0%	4%
Total	**506,244**	**2,595**	**1,987**	**100%**	**100%**	**100%**

[illegible] [illegible] [illegible] E[illegible] [illegible] [illegible]

[illegible] EC[illegible] [illegible] [illegible] [illegible] [illegible] [illegible] [illegible] ECM[illegible] [illegible] [illegible] [illegible] [illegible] [illegible] [

ECM

E D

		Space Heating		Space Cooling		Air Distribution (Fans)	SHW/DHW		Lighting	Plug Loads
ECM #	Measure Name	Electric Savings (kWh/yr)	Natural Gas Savings (therms/yr)	Electric Savings (kWh/yr)	Natural Gas Savings (therms/yr)	Electric Savings (kWh/yr)	Electric Savings (kWh/yr)	Natural Gas Savings (therms/yr)	Electric Savings (kWh/yr)	Electric Savings (kWh/yr)
1	ECM-1: Interior Lighting Upgrade	0	-464	0	0	0	0	0	50,503	0
2	ECM-2: Low Flow Fixtures	0	0	0	0	0	0	373	0	0
3	ECM-3: Exterior Lighting Upgrade	0	0	0	0	0	0	0	31,354	0
4	ECM-4: Occupancy Sensor Controls	0	-126	0	0	0	0	0	13,685	0
5	ECM-5: Retro -Commissioning	0	0	12,150	0	8,100	0	0	0	0
6	ECM-6: Solar PV	0	0	0	0	0	0	0	0	0
Annual Total Savings		0	-590	12,150	0	8,100	0	373	95,542	0

		Space Heating		Space Cooling		Air Distribution (Fans)	SHW/DHW		Lighting	Plug Loads
ECM #	Measure Name	Electric Savings (kWh/yr)	Natural Gas Savings (therms/yr)	Electric Savings (kWh/yr)	Natural Gas Savings (therms/yr)	Electric Savings (kWh/yr)	Electric Savings (kWh/yr)	Natural Gas Savings (therms/yr)	Electric Savings (kWh/yr)	Electric Savings (kWh/yr)
7	ECM-7: Plug Load Management	0	0	0	0	0	0	0	0	5,151
8	ECM-8: DHW Heater Upgrade	0	0	0	0	0	0	0	0	0
Annual Total Savings		0	0	0	0	0	0	0	0	5,151

E I GHG

I[illegible] ECM[illegible] [illegible]CM[illegible] [illegible] [illegible] [illegible] [illegible] [illegible] [illegible] [illegible] [illegible] [illegible] [illegible] [illegible] [illegible] [illegible] [illegible]

[illegible] [illegible] [illegible] [illegible] [illegible]

Annual Energy Usage	Existing	Proposed	Unit	Existing Cost	Proposed Cost	%Savings
Electricity	506,240	150,571	kWh	$33,304	$9,921	70.3%
Summer Peak kW	195	147	kW	$29,360	$19,332	24.2%
Winter Peak kW	162	115	kW			29.0%
Natural Gas	2,595	2,708	therm	$3,236	$3,421	-4.3%
Metric Tons CO_2e	253.5	85.7	$MgCO_2e$	NA	NA	66.2%
				$65,900	**$31,377**	**52.4%**

A[illegible] ECM[illegible] [illegible] [illegible] [illegible] [illegible] [illegible] [illegible] [illegible] [illegible] [illegible] [illegible] [illegible] [illegible] [illegible] [

[illegible] [illegible] ENERGY USE INTENSITY

	Annual Energy Cost per Square Foot ($ / sq ft-yr)	Site EUI (kBtu / sq ft-yr)	Annual Energy Cost ($ / yr)
Existing (CY 2017)	$1.68	50.7	$65,900
Proposed	$0.80	41.2	$31,377
% Savings	52.4%	18.8%	52.4%

[illegible] EUI [illegible] [illegible] [illegible] [illegible] [illegible] [illegible] [illegible] EUI [illegible] [illegible] [illegible] [illegible] [illegible] [illegible] ECM[illegible] [illegible] [illegible] [illegible] [illegible] [illegible] [illegible]

GRAPH [illegible] [illegible] ENERGY USE INTENSITY

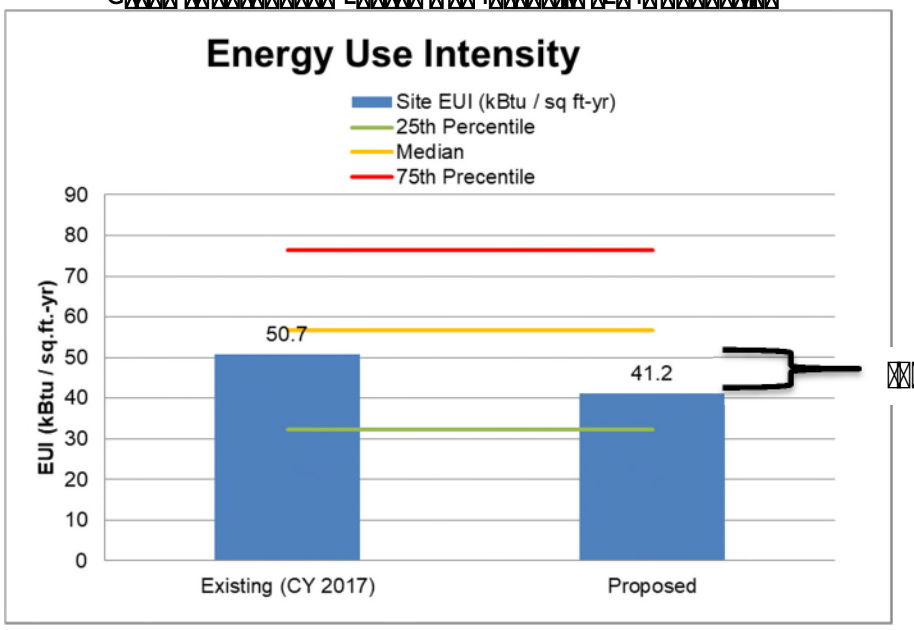

[illegible] [illegible]

[illegible] [illegible] ENERGY [illegible] [illegible] [illegible] [illegible] [illegible] [illegible]

[illegible] [illegible] [illegible] [illegible] [illegible] [illegible] [

G[illegible] E[illegible] D[illegible] C[illegible]

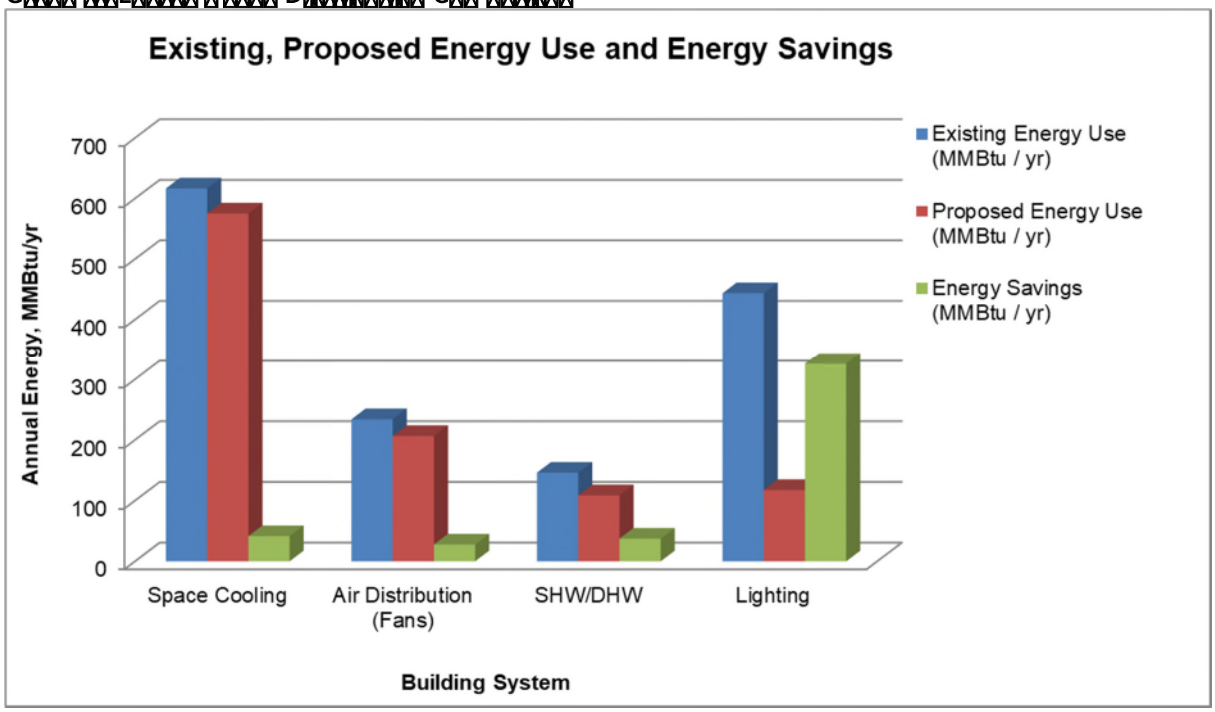
Existing, Proposed Energy Use and Energy Savings
Annual Energy, MMBtu/yr
700
600
500
400
300
200
100
0
Space Cooling
Air Distribution (Fans)
SHW/DHW
Lighting
Building System
Existing Energy Use (MMBtu / yr)
Proposed Energy Use (MMBtu / yr)
Energy Savings (MMBtu / yr)

[illegible] [illegible] E[illegible] [illegible] [illegible] [illegible]

End Uses Type	Existing Annual Energy Use			Proposed Annual Energy Use			% Reduction
	Electric (kWh/yr)	Natural Gas (therm/yr)	Total Site Energy Use (MMBtu/yr)	Electric (kWh/yr)	Natural Gas (therm/yr)	Total Site Energy Use (MMBtu/yr)	
Space Heating	3,023	1,135	124	3,023	1,725	183	-48%
Space Cooling	180,723	0	617	168,573	0	575	7%
Air Distribution (Fans)	68,584	0	234	60,484	0	206	12%
SHW/DHW	0	1,460	146	0	1,087	109	26%
Lighting	129,965	0	443	34,423	0	117	74%
Plug Loads	103,018	0	351	103,018	0	351	0%
Information Technology	20,931	0	71	20,931	0	71	0%
Total Estimated	506,244	2,595	1,987	390,453	2,812	1,613	19%
Total per Sq-ft	12.9	0.1	0.1	10.0	0.1	0.0	

[illegible] E[illegible] C[illegible] M[illegible]

[illegible] EC[illegible] [illegible] ECM[illegible] [illegible] [illegible] [

F[illegible] [illegible]E[illegible] L[illegible] F[illegible] L[illegible] F[illegible]

Recommendation

[illegible] EC[illegible] [illegible] [illegible] [illegible] [illegible] [illegible] [illegible] [illegible] [illegible] [illegible] LED [illegible] [illegible]

L[illegible] [illegible] [illegible] [illegible] [illegible] [illegible] [illegible] [illegible] [illegible] [illegible] [illegible] LED [illegible] [illegible] [illegible] [illegible] [illegible] [illegible] [illegible] [illegible] [illegible] [illegible]

[illegible] ECM [illegible] L[illegible] F[illegible] [illegible] F[illegible]

Economic Summary

ECM[illegible] [illegible]
E[illegible] [illegible] [illegible]
A[illegible] M[illegible] D[illegible] [illegible] [illegible]
[illegible] G[illegible] [illegible] [illegible]
[illegible] [illegible]
E[illegible] [illegible] C[illegible]
E[illegible] [illegible] I[illegible] [illegible] C[illegible]
[illegible] [illegible] [illegible]
M[illegible] [illegible] C[illegible] [illegible] [illegible] M[illegible] [illegible]

Existing Condition

[illegible] [illegible] [illegible] [

Recommendation

[illegible] ECM [illegible] [illegible] [illegible]

[redacted] ECM [redacted] E[redacted] L[redacted]

Economic Summary

ECM[redacted]
E[redacted]
A[redacted] M[redacted] D[redacted]
E[redacted] C[redacted]
E[redacted] I[redacted] C[redacted]
[redacted]
M[redacted] C[redacted] M[redacted]

Existing Condition

[redacted]

Recommendation

[redacted] E[redacted] LED [redacted] LED [redacted]

[redacted] E[redacted] LED [redacted]

F[redacted] CFL [redacted] E[redacted] LED [redacted]

F[redacted] E[redacted] LED [redacted]

[redacted] ECM [redacted] CFL [redacted]

F[redacted] E[redacted] LED [redacted]

Interactive Effects

[redacted]

[redacted] ECM [redacted] C[redacted]

Economic Summary

ECM[redacted]
E[redacted]
A[redacted] M[redacted] D[redacted]
G[redacted]
E[redacted] C[redacted]
E[redacted] I[redacted] C[redacted]
[redacted]
M[redacted] C[redacted] M[redacted]

Existing Condition

[redacted]

Recommendation

[redacted] ECM [redacted] D[redacted]

[redacted] ECM [redacted]

F[redacted] M[redacted] C[redacted] M[redacted]

[redacted] ECM [redacted]

Interactive Effects

ECM[redacted] ECM[redacted] ECM[redacted] A[redacted] E[redacted]

[redacted] ECM [redacted] C[redacted]

Economic Summary

ECM[redacted]	
E[redacted]	
A[redacted] M[redacted] D[redacted]	
[redacted] G[redacted]	
E[redacted] C[redacted]	
E[redacted] I[redacted] C[redacted]	
[redacted]	
GHG E[redacted] M[redacted]	
C[redacted] GHG [redacted] M[redacted]	

Existing Condition

[redacted] E[redacted] H[redacted] AC [redacted] D[redacted] E[redacted]

H[redacted] AC [redacted]

[redacted] H[redacted] AC [redacted] A[redacted] E[redacted] A[redacted]

F[redacted] A[redacted]

[redacted] DC[redacted] DC[redacted] DC[redacted] DC[redacted]

Recommendation

[illegible]

[illegible]

[illegible]

[illegible]

[illegible]

Interactive Effects

[illegible]

[illegible] ECM [illegible] [illegible]

Economic Summary

ECM[illegible] [illegible]
E[illegible] [illegible] [illegible]
A[illegible] M[illegible] D[illegible] [illegible] [illegible]
E[illegible] [illegible] C[illegible]
E[illegible] [illegible] I[illegible] [illegible] C[illegible]
[illegible] [illegible] [illegible]
E[illegible] [illegible] I[illegible]
[illegible] I[illegible] [illegible] C[illegible]
[illegible] [illegible] [illegible] I[illegible]
M[illegible] C[illegible] [illegible] [illegible] M[illegible]

Existing Condition

[illegible] H[illegible] B[illegible] [illegible] [illegible] [

[redacted]

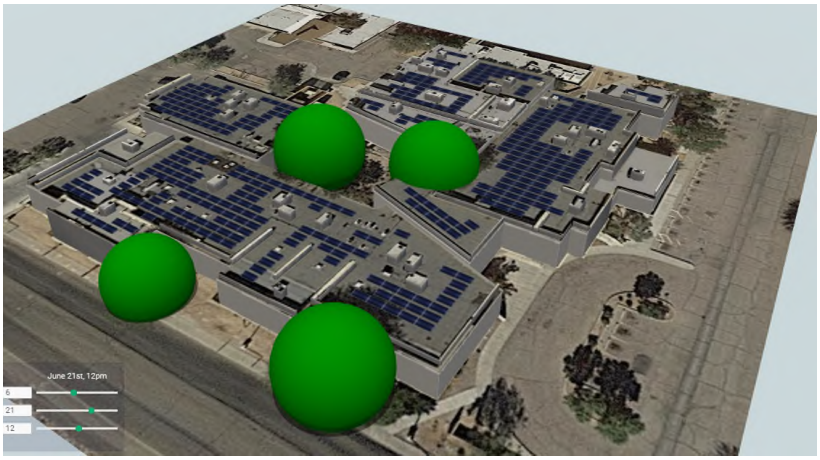

F[redacted] L[redacted]

A [redacted]

[redacted] A[redacted]

[redacted] F[redacted]

Interactive Effects

[redacted]

[redacted] M[redacted] F[redacted] C[redacted]

[redacted] ECM[redacted] [redacted] [redacted] [

[illegible]

[illegible]

Interactive Effects

[illegible]

[illegible] ECM [illegible] DH [illegible] H[illegible]

Economic Summary

ECM[illegible]
E[illegible]
A[illegible] M[illegible] D[illegible]
[illegible] G[illegible]
E[illegible] C[illegible]
E[illegible] I[illegible] C[illegible]
[illegible]
M[illegible] C[illegible] M[illegible]

Existing Condition

[illegible] DH [illegible] DH [illegible]

Recommendation

[illegible] A[illegible]

Interactive Effects

ECM[illegible] DH[illegible] H[illegible] ECM[illegible] E[illegible] ECM[illegible]

[illegible] M[illegible] [illegible] F[illegible]

D[illegible] [illegible] [illegible] E[illegible] [illegible] [illegible] [

ROCK GAP
Energy Services

A[illegible]E DI[illegible]

CALC[illegible]LA[illegible]I[illegible] A[illegible]D C[illegible] E[illegible]IMA[illegible]E

ROCK GAP
Energy Services

ECM-3: Exterior Lighting Upgrade
Health Department
Energy Audit
February-2019
NORESCO

ECM[illegible]
E[illegible]
A[illegible] M[illegible] D[illegible]
E[illegible] C[illegible]
E[illegible] I[illegible] C[illegible]
[illegible]
M[illegible] C[illegible]

Light Fixture Location	Fixture Quantity	Lighting Control	Area Illuminated	Annual Operating Hours	Existing Exterior Lighting					Proposed Exterior Lighting			Energy Savings (kWh)
					Quantity Fixtures Burned Out	Fixture Type	Watts Per Fixture	Watts Per Ballast (Burned Out Fixtures)	Energy Consumption (kWh)	Replacement Fixture	Watts Per Fixture	Energy Consumption (kWh)	
Parking, S Sidewalk	10	Photo sensor	Parking	4,380	0	400W MH	458	0	20,060	150 Watt LED NextGen II Parking Lot Lights - 20,000 Lumen - 5000K - Slip Fit Mount - WITH photocell	150	6,570	13,490
N Façade		Photo sensor	Façade	4,380	0	70W MH	70	0	5,515	LED Wall Pack Fixture Replacement	12	945	4,570
S Façade		Photo sensor	Façade	4,380	0	70W MH	70	0	5,515	LED Wall Pack Fixture Replacement	12	945	4,570
E Façade		Photo sensor	Façade	4,380	0	70W MH	70	0	5,265	LED Wall Pack Fixture Replacement	12	903	4,362
W Façade		Time clock	Façade	4,380	0	70W MH	70	0	5,265	LED Wall Pack Fixture Replacement	12	903	4,362
									41,620				**31,354**

Annual Months of Demand Savings	0
Demand Coincidence Factor	0%

ROCK GAP
Energy Services

ECM-4: Occupancy Sensor Controls
Health Department
Energy Audit
February-2019
NORESCO

ECM [illegible]
E[illegible]
A[illegible]
[illegible]
E[illegible]
E[illegible]
[illegible]
M[illegible]

Baseline Case			ECM Case		
Total lighting savings after lighting LED upgrade (kWh)	Lighting Demand Savings after LED upgrade (kW)	Lighting Gas Savings after LED upgrade (therm)	Total lighting savings with sensors (kWh)	Lighting Demand Savings with sensors (kW)	Lighting Gas Savings with sensors (therm)
[illegible]	[illegible]	[illegible]	[illegible]	[illegible]	[illegible]

			Existing										Proposed								Savings	
Area	Sub Area	Space Type	Lamp Type	# of Fixtures	Lighting Control	Number of Burned Out Fixtures	Lamps / Fixture	Watts / Lamp	Ballast Factor	Run Hours	Demand (kW)	Energy Usage (kWh)	Fixture Type	Lighting Control	# of Fixtures	Lamps / Fixture	Total New Lamps	Watts / Lamp	Run Hours	Demand (kW)	Energy Usage (kWh)	Demand (kW)	Energy Savings (kWh)
Original Building	SW Wing	Office	Orig. 2x4 w 4TBs	39	No Sensor	0	4	32	1	2,000	4.4	8,786	4' LED	Sensor	39	4	156	15	1400	2.3	3,276	2.1	5,510
Original Building	SW Wing	Office	Orig. Recessed Cans	63	No Sensor	0	2	26	1	2,000	2.9	5,766	l Tube CFL LED	Sensor	63	2	126	9	1400	1.1	1,588	1.7	4,178
Original Building	SW Wing	Office	Orig. 2x2 w 2TBs	9	No Sensor	0	2	17	1	2,000	0.3	539	2' LED	Sensor	9	2	18	8	1400	0.1	202	0.1	337
Original Building	E-W Hallway and Lobby	Hallway	Orig. Recessed Cans	46	No Sensor	0	2	26	1	2,720	2.1	5,725	l Tube CFL LED	Sensor	46	2	92	9	1904	0.8	1,577	1.3	4,149
Original Building	E-W Hallway and Lobby	Office	Orig. 2x4 w 4TBs	4	No Sensor	0	4	32	1	2,000	0.5	901	4' LED	Sensor	4	4	16	15	1400	0.2	336	0.2	565
Original Building	West Wing	Clinic	Orig. 2x4 w 4TBs	28	No Sensor	0	4	32	1	2,000	3.2	6,308	4' LED	Sensor	28	4	112	15	1400	1.7	2,352	1.5	3,956
Original Building	West Wing	Clinic	Orig. 2x2 w 2TBs	26	No Sensor	0	2	17	1	2,000	0.8	1,556	2' LED	Sensor	26	2	52	8	1400	0.4	582	0.4	973
Original Building	West Wing	Clinic	Orig. Recessed Cans	20	No Sensor	0	2	26	1	2,000	0.9	1,830	l Tube CFL LED	Sensor	20	2	40	9	1400	0.4	504	0.6	1,326
Original Building	West Wing	Clinic	rig. 4' pendants w 2 T8	17	No Sensor	0	2	32	1	2,000	1.0	1,915	4' LED	Sensor	17	2	34	15	1400	0.5	714	0.4	1,201
Original Building	North Wing	Conference	Orig. 2x2 w 2TBs	14	No Sensor	0	2	17	1	1,280	0.4	536	2' LED	Sensor	14	2	28	8	896	0.2	201	0.2	335
Original Building	North Wing	Conference	Orig. Recessed Cans	20	No Sensor	0	2	26	1	1,280	0.9	1,171	l Tube CFL LED	Sensor	20	2	40	9	896	0.4	323	0.6	849
Original Building	North Wing	Conference	Orig. 2x4 w 4TBs	9	No Sensor	0	4	32	1	1,280	1.0	1,298	4' LED	Sensor	9	4	36	15	896	0.5	484	0.5	814
Original Building	N-S Hallway	Hallway	Orig. Recessed Cans	19	No Sensor	0	2	26	1	2,720	0.9	2,365	l Tube CFL LED	Sensor	19	2	38	9	1904	0.3	651	0.5	1,714
Dental Addition	Operatory/Offices	Office	SA	28	No Sensor	0	2	32	1	2,000	1.6	3,154	4' LED	Sensor	28	2	56	15	1400	0.8	1,176	0.7	1,978
Dental Addition	Office/Brkrm	Office	SB - T5HO	14	No Sensor	0	2	28	1	2,000	0.7	1,380	4' T5 LED	Sensor	14	2	28	13	1400	0.4	510	0.3	870
Dental Addition	Office/Dental	Office	FC	11	No Sensor	0	4	32	1	2,000	1.2	2,478	4' LED	Sensor	11	4	44	15	1400	0.7	924	0.6	1,554
Dental Addition	Mech	Storage	FL	6	No Sensor	0	2	32	1	200	0.3	68	4' LED	Sensor	6	2	12	15	140	0.2	25	0.2	42
Dental Addition	Hallways	Hallway	PA	62	No Sensor	0	2	26	1	2,720	2.8	7,717	l Tube CFL LED	Sensor	62	2	124	9	1904	1.1	2,125	1.7	5,592
Dental Addition	Conf	Conference	FK, FB	6	No Sensor	0	3	32	1	1,280	0.5	649	4' LED	Sensor	6	3	18	15	896	0.3	242	0.2	407
Dental Addition	Conf	Conference	PF	7	No Sensor	0	1	32	1	1,280	0.2	252	l Tube CFL LED	Sensor	7	1	7	9	896	0.1	56	0.1	196
Dental Addition	Conf	Conference	UC	2	No Sensor	0	1	50	1	1,280	0.1	113	l Tube CFL LED	Sensor	2	1	2	18	896	0.0	32	0.1	80
Dental Addition	Offices	Office	FK, FB	4	No Sensor	0	3	32	1	2,000	0.3	676	4' LED	Sensor	4	3	12	15	1400	0.2	252	0.2	424
Dental Addition	restrooms	Bathroom	FD, FJ	5	No Sensor	0	2	17	1	2,400	0.1	359	2' LED	Sensor	5	2	10	10	1680	0.1	168	0.0	191
Dental Addition	restrooms	Bathroom	FE	2	No Sensor	0	2	32	1	2,400	0.1	270	4' LED	Sensor	2	2	4	15	1680	0.1	101	0.1	170
Dental Addition	restrooms	Bathroom	PA	6	No Sensor	0	2	26	1	2,400	0.3	659	l Tube CFL LED	Sensor	6	2	12	9	1680	0.1	181	0.2	478
Dental Addition	Conf	Conference	SB - T5HO	3	No Sensor	0	2	28	1	1,280	0.1	189	4' T5 LED	Sensor	3	2	6	13	896	0.1	70	0.1	119
Dental Addition	Storage	Storage	FA	2	No Sensor	0	2	32	1	200	0.1	23	4' LED	Sensor	2	2	4	15	140	0.1	8	0.1	14
Phase 1 - NE Clinic	Clinic	Clinic	A, B	58	No Sensor	0	2	32	1	2,000	3.3	6,533	4' LED	Sensor	58	2	116	15	1400	1.7	2,436	1.5	4,097
Phase 1 - NE Clinic	Clinic	Hallway	C, D	45	No Sensor	0	2	26	1	2,720	2.1	5,601	l Tube CFL LED	Sensor	45	2	90	9	1904	0.8	1,542	1.2	4,059
Phase 2 Alternative Med	Clinic	Clinic	N	8	No Sensor	0	2	32	1	2,000	0.5	901	4' LED	Sensor	8	2	16	15	1400	0.2	336	0.2	565
Phase 2 Alternative Med	Clinic	Clinic	Orig. 2x4 w 4TBs	37	No Sensor	0	4	32	1	2,000	4.2	8,335	4' LED	Sensor	37	4	148	15	1400	2.2	3,108	1.9	5,227
Phase 2 Alternative Med	Clinic	Clinic	Orig. 2x2 w 2TBs	10	No Sensor	0	2	17	1	2,000	0.3	598	2' LED	Sensor	10	2	20	8	1400	0.2	224	0.1	374
Phase 2 Alternative Med	Clinic	Clinic	Orig. Recessed Cans	49	No Sensor	0	2	26	1	2,000	2.2	4,484	l Tube CFL LED	Sensor	49	2	98	9	1400	0.9	1,235	1.4	3,250
Phase 3 - Pharmacy	Clinic	Clinic	A, B	23	No Sensor	0	2	32	1	2,000	1.3	2,591	4' LED	Sensor	23	2	46	15	1400	0.7	966	0.6	1,625
Phase 3 - Pharmacy	Clinic	Clinic	C, D	15	No Sensor	0	2	26	1	2,000	0.7	1,373	l Tube CFL LED	Sensor	15	2	30	9	1400	0.3	378	0.4	995
Phase 3 - Pharmacy	Clinic	Clinic	Orig. 2x4 w 4TBs	5	No Sensor	0	4	32	1	2,000	0.6	1,126	4' LED	Sensor	5	4	20	15	1400	0.3	420	0.3	706
Phase 3 - Pharmacy	Clinic	Clinic	Orig. 2x2 w 2TBs	2	No Sensor	0	2	17	1	2,000	0.1	120	2' LED	Sensor	2	2	4	8	1400	0.0	45	0.0	75
TOTAL	-	-	-	**724**	-		-	-			**42.8**	**88,345**	-		**724**	-	**1715**	-		**20.6**	**29,349**	**22.2**	**58,996**

Typical Lighting Operating Hours								
		Hours / Day					Annual Hours	
Space Type	Average Hours Saved From Sensors/ BMS	Mon. - Fri.	Sat.	Sun.	Hours / Week	Weeks / Year	Without Sensors	With Sensors
Clinic	30%	10	0	0	50	40	**2,000**	**1,400**
Lobby	30%	12	12	12	84	40	**3,360**	**2,352**
Office	30%	10	0	0	50	40	**2,000**	**1,400**
Hallway	30%	12	4	4	68	40	**2,720**	**1,904**
Bathroom	30%	12	0	0	60	40	**2,400**	**1,680**
Storage	30%	1	0	0	5	40	**200**	**140**
Conference	30%	6	2	0	32	40	**1,280**	**896**
Kitchen	30%	9	9	9	63	40	**2,520**	**1,764**

Existing				Proposed	
Existing Lamp	Watts/ Lamp	Lamps/ Fixture	Ballast Factor	New Fixture	New Watts/ Lamp
' pendants w	32	2	0.88	4' LED	15
ig. 2x2 w 2T	17	2	0.88	2' LED	8
ig. 2x4 w 4T	32	4	0.88	4' LED	15
Recessed C	26	2	0.88	d Tube CFL LED F	9
SA	32	2	0.88	4' LED	15
PA	26	2	0.88	d Tube CFL LED F	9
FC	32	4	0.88	4' LED	15
SB - T5HO	28	2	0.88	4' T5 LED	13
FL	32	2	0.88	4' LED	15
PB - 75PAR	75	1	1.00	LED Repl 75PAR	30
FK, FB	32	3	0.88	4' LED	15
PF	32	1	0.88	d Tube CFL LED F	9
FD, FJ	17	2	0.88	2' LED	10
FA	32	2	0.88	4' LED	15
UC	50	1	0.88	d Tube CFL LED F	18
FE	32	2	0.88	4' LED	15
A, B	32	2	0.88	4' LED	15
C, D	26	2	0.88	d Tube CFL LED F	9
N	32	2	0.88	4' LED	15

New Lamp	Quantity of new Lamp
4' LED	**850**
2' LED	**132**
Quad Tube Cl	**699**
4' T5 LED	**34**
LED Repl 75P	**0**
N/R	**0**

	Estimated Number of Occ Sensors Needed (Based on
Switch Mou	52
Ceiling Mou	5

ROCK GAP
Energy Services

Plant	Fuel	System Efficiency	% of Load	Conversion Factor
Heating	Natural Gas	100	100%	100
	#2 Fuel Oil	100	0%	139.4
	Electric	1.0	0%	3.412

HVAC Interaction Calculation*

HVAC Cooling Interaction Factor ($HVAC_C$)	HVAC Cooling Demand Factor ($HVAC_D$)	Estimated Lighting Savings in Cooled Space	Cooling Demand Savings (kW)	Cooling Energy Savings (kWh)	HVAC Heating Interaction Factor ($HVAC_C$)	Estimated Lighting Savings in Heated Space	Gas Heating Savings (therms)	Oil Heating Savings (gal)	Electric Heating Savings (kWh)
0.11	0.20	80%	**3.6**	**5,192**	-0.010	100%	**-590**	**0**	**0**

Annual Months of Demand Savings	12
Demand Coincidence Factor	1.0

ROCK GAP
Energy Services

ECM-5: Retro -Commissioning
Health Department
Energy Audit
February-2019
NORESCO

ECM
E
A M D
G
E C
E I C
GHG E M C
C GHG M C

Total Annual Electric Energy Consumption (kWh)	Total Annual Natural Gas Consumption (Therm)	Average monthly peak kW	RCx savings %
506,240	2595	138	4.0%

ROCK GAP
Energy Services

ECM-6: Solar PV
Health Department
Energy Audit
February-2019
NORESCO

ECM[illegible]	
E[illegible]	[illegible]
A[illegible] M[illegible] D[illegible]	[illegible]
E[illegible] C[illegible]	[illegible]
E[illegible] I[illegible] C[illegible]	[illegible]
[illegible]	[illegible]
E[illegible] I[illegible]	[illegible]
[illegible] C[illegible]	[illegible]
[illegible] I[illegible]	[illegible]
M[illegible] C[illegible]	[illegible]

Annual Production from Aurora Solar:
239,877 kWh

Baseline electric consumption:
506,240 kWh

% Offset
47.4%

System Size :
150 kW

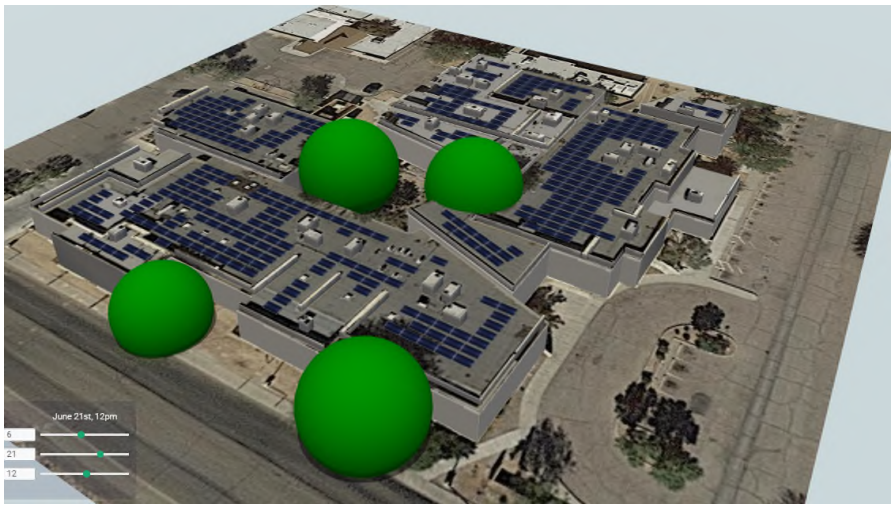

PROJECT FINANCIAL ECONOMICS

Annual Maintenance Cost	$3,760
Cost per kw installed (Gross)	$3,030
nstalled Cost	$455,712
Markup	120%
Sell Price	$546,854
Tax Credit	$189,056
Net Price	$357,798

Monthly kW savings											
7.46	14.33	7.59	32.55	34.17	16.21	17.7	22.84	12.6	8.91	9.94	4.95
Jan	Feb	Mar	Apr	May	Jun	Jul	Aug	Sep	Oct	Nov	Dec

ROCK GAP
Energy Services

ECM-7: Plug Load Management
Health Department
Energy Audit
February-2019
NORESCO

ECM
E
A M D
G
E C
E I C
GHG E M C

Estimated Plug Load (kWh)	Plug load utilization %	Total Energy for Plug Load Management (kWh)	Plug load Savings %	Plug load Savings kWh
103,018	25%	25,754	20%	5,151

Estimated number of controlled outlets:
65

ROCK GAP
Energy Services

ECM-8: DHW Heater Upgrade
Health Department
Energy Audit
February-2019
NORESCO

ECM
E
A M D
G
E C
E I C
M C M C

Existing Boiler				Proposed Boiler				
Fuel Type	Existing Fuel Consumption* (Therms)	Combustion Efficiency (%)**	Annual Boiler Output (kBtu)	Fuel Type	Combustion Efficiency (%)	Fuel Input (kBtu)	Proposed Fuel Oil Consumption (Gallons)	Proposed Natural Gas Consumption (Therms)
Natural Gas	**1,087**	**80%**	86,929	**Natural Gas**	**95%**	91,504	0	915

Notes:
****Fuel consumption was based on end use breakdown analysis***
*****Combustion efficiency accounts for some degradation due to boiler age***

Notes:
existing boilers are 75MBH, 156MBH, 75MBH, 40 MBH

ROCK GAP
Energy Services

ECM-1: Interior Lighting Upgrade									
N/N	SOURCE LINE ITEM	DESCRIPTION OF WORK	UNIT	QTY	MATERIAL		LABOR		TOTAL
					PER UNIT	TOTAL	PER UNIT	TOTAL	
1	https://www.1000bulbs.com/product/174238/PLT-10351.html	Retrofit 4' T8 Fixtures with LED Lamps, Plug and Play	per lamp	850	5.99	$ 5,092	$ 9	$ 8,065	$ 13,157
2	https://www.1000bulbs.com/product/208967/SATCO-S29850.html	Retrofit 42W and 32W 4 tube CFLs with 9watt plug and play LED lamp	per lamp	699	11.00	$ 7,689	$ 9	$ 6,632	$ 14,321
3	https://www.1000bulbs.com/product/175499/PLT-10433.html	Retrofit 4' T5 Fixtures with LED Lamps, Plug and Play	per lamp	34	8.95	$ 304	$ 9	$ 323	$ 627
4	https://www.1000bulbs.com/product/191727/GREENCREATIVE-57960.html	Retrofit 2' Linear Fluor Fixtures with LED Lamps, Plug and Play	per lamp	132	13.98	$ 1,845	$ 9	$ 1,252	$ 3,098
5	https://lampmaster.com/recycling-container-products/lampmaster/4ft-lampmaster-recycling-kit/	Fluorescent Lamp Recycling	per lamp	1,715	0.85	$ 1,458	$ -	$ -	$ 1,458
								Sub-Total	$ 31,203
								O&P 10%	$ 3,120
								CONTINGENCY 10%	$ 3,432
								ASBESTOS ABATEMENT	$ -
								ASBESTOS CONTINGENCY 0%	$ -
								PAYMENT & PERFORMANCE BOND 0%	$ -
								IC FEE 0%	$ -
								INTEREST DURING CONSTRUCTION 3%	$ 1,133
								DESIGN AND CM 20%	$ 7,777.67
								Other ( ) 0%	$ -
								Total	**$ 46,700**

ECM-2: Low Flow Fixtures									
N/N	SOURCE LINE ITEM	DESCRIPTION OF WORK	UNIT	QTY	MATERIAL		LABOR		TOTAL
					PER UNIT	TOTAL	PER UNIT	TOTAL	
1	https://www.supply.com/shop?nid=1683972&d=1056-1276&wmh_cid=643787492&wmh_aid=35077052860&wmh_kid=393808527774&gclid=Cj0KCQiA37HhBRC8ARIsAPWoO0zTqgWC6HK4nbHpp1XwaH7bvQatWz3v5RXUiW4YW13fkWS4UMUrWLsaAn2ZEALw_wcB	Replace toilets with 1.0 GPF toilet	per toilet	21	$ 164	$ 3,444	$ 76	$ 1,594	$ 5,038
2	https://www.sustainablesupply.com/Zurn-Faucet-Manual-Lever-1-2-In-NPSM-05-gpm-Z81101-XL-3M-C1913257	Replace bathroom faucets with 0.5 GPM faucets, Manual Lever	per faucet	14	$ 112	$ 1,571	$ 19	$ 266	$ 1,836
3	https://www.supply.com/toto-porcelain-125-gpf-urinal-ut105u-01-cotton-white/p211519	Replace urinals with 0.125GPF	per urinal	2	$ 144	$ 289	$ 114	$ 228	$ 517
								Sub-Total	$ 7,391
								O&P 10%	$ 739
								CONTINGENCY 10%	$ 813
								ASBESTOS ABATEMENT	$ -
								ASBESTOS CONTINGENCY 0%	$ -
								PAYMENT & PERFORMANCE BOND 0%	$ -
								IC FEE 0%	$ -
								INTEREST DURING CONSTRUCTION 3%	$ 268
								DESIGN AND CM 20%	$ 1,842.31
								Other ( ) 0%	$ -
								Total	**$ 11,100**

ECM-3: Exterior Lighting Upgrade									
N/N	SOURCE LINE ITEM	DESCRIPTION OF WORK	UNIT	QTY	MATERIAL		LABOR		TOTAL
					PER UNIT	TOTAL	PER UNIT	TOTAL	
1	https://www.1000bulbs.com/product/202401/LEDF-JDWMK121CW.html	Replace 70W Metal Halide Wall Pack Fixtures with 12W LED Fixtures	per fixture	70	$ 55	$ 3,884	$ 57	$ 3,985	$ 7,869

ROCK GAP
Energy Services

2	https://www.ledlightexpert.com/150-Watt-LED-NextGen-II-Parking-Lot-Lights--20000-Lumen--5000K--Slip-Fit-Mount--WITH-photocell-_p_166.html	Replace parking lot pole fixtures with 150watt LED shoebox fixture	per fixture	10	$ 169	$ 1,690	$ 76	$ 759	$ 2,449
								Sub-Total	$ 10,319
								O&P 10%	$ 1,032
								CONTINGENCY 10%	$ 1,135
								ASBESTOS ABATEMENT	$ -
								ASBESTOS CONTINGENCY 0%	$ -
								PAYMENT & PERFORMANCE BOND 0%	$ -
								IC FEE 0%	$ -
								INTEREST DURING CONSTRUCTION 3%	$ 375
								DESIGN AND CM 20%	$ 2,572.01
								Other ( ) 0%	$ -
								Total	**$ 15,500**

ECM-4: Occupancy Sensor Controls

N/N	SOURCE LINE ITEM	DESCRIPTION OF WORK	UNIT	QTY	MATERIAL		LABOR		TOTAL
					PER UNIT	TOTAL	PER UNIT	TOTAL	
1	https://www.1000bulbs.com/product/191663/ENER-MWOSW.html	Install Dual Technology Ultrasonic/PIR occupancy sensing wall switch for Offices and Restrooms	Per switch	52	65.82	$ 3,423	$ 28	$ 1,480	$ 4,903
2	https://www.1000bulbs.com/product/65481/LUT-LOSCIR1500W.html	Install Dual Technology Ultrasonic/PIR ceiling mounted occupancy sensor for Conference Rooms	Per Room	5	75.76	$ 379	$ 228	$ 1,139	$ 1,517
								Sub-Total	$ 6,420
								O&P 10%	$ 642
								CONTINGENCY 10%	$ 706
								ASBESTOS ABATEMENT	$ -
								ASBESTOS CONTINGENCY 0%	$ -
								PAYMENT & PERFORMANCE BOND 0%	$ -
								IC FEE 0%	$ -
								INTEREST DURING CONSTRUCTION 3%	$ 233
								DESIGN AND CM 20%	$ 1,600.32
								Other ( ) 0%	$ -
								Total	**$ 9,700**

ECM-5: Retro -Commissioning

N/N	SOURCE LINE ITEM	DESCRIPTION OF WORK	UNIT	QTY	MATERIAL		LABOR		TOTAL
					PER UNIT	TOTAL	PER UNIT	TOTAL	
1	Estimated based on past projects	RCx for Wellness building.	sf	39,200		$ -	$ 0.40	$ 15,680	$ 15,680
2	Estimated based on past projects	Allowance to implement RCx measures	sf	39,200		$ -	$ 0.35	$ 13,720	$ 13,720
								Sub-Total	$ 29,400
								O&P 10%	$ 2,940
								CONTINGENCY 10%	$ 3,234
								ASBESTOS ABATEMENT	$ -
								ASBESTOS CONTINGENCY 0%	$ -
								PAYMENT & PERFORMANCE BOND 0%	$ -
								IC FEE 0%	$ -
								INTEREST DURING CONSTRUCTION 3%	$ 1,067
								DESIGN AND CM 20%	$ 7,328.24
								Other ( ) 0%	$ -
								Total	**$ 44,000**

ECM-6: Solar PV

N/N	SOURCE LINE ITEM	DESCRIPTION OF WORK	UNIT	QTY	MATERIAL		LABOR		TOTAL
					PER UNIT	TOTAL	PER UNIT	TOTAL	
1	https://news.energysage.com/much-solar-panels-cost-tucson-arizona/	Install 150kW roof mounted solar PV system including design, CM, labor	per kW	150	$ 3,030	$ 455,712	$ -	$ -	$ 455,712
								Sub-Total	$ 455,712
								O&P 0%	$ -
								CONTINGENCY 20%	$ 91,142
								ASBESTOS ABATEMENT	$ -
								ASBESTOS CONTINGENCY 0%	$ -
								PAYMENT & PERFORMANCE BOND 0%	$ -
								IC FEE 0%	$ -
								INTEREST DURING CONSTRUCTION 0%	$ -
								DESIGN AND CM 0%	$ -
								Other ( ) 0%	$ -
								Total	**$ 546,900**

ROCK GAP
Energy Services

ECM-7: Plug Load Management									
N/N	SOURCE LINE ITEM	DESCRIPTION OF WORK	UNIT	QTY	MATERIAL		LABOR		TOTAL
					PER UNIT	TOTAL	PER UNIT	TOTAL	
1	Estimated based on past projects	Plug load controllers, wholesale price for large order w/ extended warrant & software programming	EA	65	$ 160.00	$ 10,400	$ 19	$ 1,234	$ 11,634
								Sub-Total	$ 11,634
								O&P 10%	$ 1,163
								CONTINGENCY 10%	$ 1,280
								ASBESTOS ABATEMENT	$ -
								ASBESTOS CONTINGENCY 0%	$ -
								PAYMENT & PERFORMANCE BOND 0%	$ -
								IC FEE 0%	$ -
								INTEREST DURING CONSTRUCTION 3%	$ 422
								DESIGN AND CM 20%	$ 2,899.77
								Other ( ) 0%	$ -
								Total	**$ 17,400**

ECM-8: DHW Heater Upgrade									
N/N	SOURCE LINE ITEM	DESCRIPTION OF WORK	UNIT	QTY	MATERIAL		LABOR		TOTAL
					PER UNIT	TOTAL	PER UNIT	TOTAL	
1	[illegible]	Replace existing DHW heaters with new condens	MBH (blr capacity)	346	$ 66	$ 22,907		$ -	$ 22,907
								Sub-Total	$ 22,907
								O&P 10%	$ 2,291
								CONTINGENCY 10%	$ 2,520
								ASBESTOS ABATEMENT	$ -
								ASBESTOS CONTINGENCY 0%	$ -
								PAYMENT & PERFORMANCE BOND 0%	$ -
								IC FEE 0%	$ -
								INTEREST DURING CONSTRUCTION 3%	$ 832
								DESIGN AND CM 20%	$ 5,709.78
								Other ( ) 0%	$ -
								Total	**$ 34,300**

ROCK GAP
Energy Services

ECM-1: Interior Lighting Upgrade
Health Department
Energy Audit
February-2019
NORESCO

ECM [illegible]
E[illegible]
A[illegible]
[illegible]
E[illegible]
E[illegible]
[illegible]
M[illegible]

		Existing											Proposed						Savings	
Area	Sub Area	Space Type	Lamp Type	# of Fixtures	Lighting Control	Number of Burned Out Fixtures	Lamps / Fixture	Watts / Lamp	Ballast Factor	Run Hours	Demand (kW)	Energy Usage (kWh)	Fixture Type	# of Fixtures	Lamps / Fixture	Total New Lamps	Watts / Lamp	Demand (kW)	Energy Usage (kWh)	Demand (kW)	Energy Savings (kWh)
Original Building	SW Wing	Office	Orig. 2x4 w 4T8s	39	No Sensor	0	4	32	1	2,000	4.4	8,786	4' LED	39	4	156	15	2.3	4,680	2.1	4,106
Original Building	SW Wing	Office	Orig. Recessed Cans	63	No Sensor	0	2	26	1	2,000	2.9	5,766	d Tube CFL LED	63	2	126	9	1.1	2,268	1.7	3,498
Original Building	SW Wing	Office	Orig. 2x2 w 2T8s	9	No Sensor	0	2	17	1	2,000	0.3	539	2' LED	9	2	18	8	0.1	288	0.1	251
Original Building	E-W Hallway and Lobby	Hallway	Orig. Recessed Cans	46	No Sensor	0	2	26	1	2,720	2.1	5,725	d Tube CFL LED	46	2	92	9	0.8	2,252	1.3	3,473
Original Building	E-W Hallway and Lobby	Office	Orig. 2x4 w 4T8s	4	No Sensor	0	4	32	1	2,000	0.5	901	4' LED	4	4	16	15	0.2	480	0.2	421
Original Building	West Wing	Clinic	Orig. 2x4 w 4T8s	28	No Sensor	0	4	32	1	2,000	3.2	6,308	4' LED	28	4	112	15	1.7	3,360	1.5	2,948
Original Building	West Wing	Clinic	Orig. 2x2 w 2T8s	26	No Sensor	0	2	17	1	2,000	0.8	1,556	2' LED	26	2	52	8	0.4	832	0.4	724
Original Building	West Wing	Clinic	Orig. Recessed Cans	20	No Sensor	0	2	26	1	2,000	0.9	1,830	d Tube CFL LED	20	2	40	9	0.4	720	0.6	1,110
Original Building	West Wing	Clinic	Orig. 4' pendants w 2 T8	17	No Sensor	0	2	32	1	2,000	1.0	1,915	4' LED	17	2	34	15	0.5	1,020	0.4	895
Original Building	North Wing	Conference	Orig. 2x2 w 2T8s	14	No Sensor	0	2	17	1	1,280	0.4	536	2' LED	14	2	28	8	0.2	287	0.2	249
Original Building	North Wing	Conference	Orig. Recessed Cans	20	No Sensor	0	2	26	1	1,280	0.9	1,171	d Tube CFL LED	20	2	40	9	0.4	461	0.6	711
Original Building	North Wing	Conference	Orig. 2x4 w 4T8s	9	No Sensor	0	4	32	1	1,280	1.0	1,298	4' LED	9	4	36	15	0.5	691	0.5	606
Original Building	N-S Hallway	Hallway	Orig. Recessed Cans	19	No Sensor	0	2	26	1	2,720	0.9	2,365	d Tube CFL LED	19	2	38	9	0.3	930	0.5	1,435
Dental Addition	Operatory/Offices	Office	SA	28	No Sensor	0	2	32	1	2,000	1.6	3,154	4' LED	28	2	56	15	0.8	1,680	0.7	1,474
Dental Addition	Office/Brkrm	Office	SB - T5HO	14	No Sensor	0	2	28	1	2,000	0.7	1,380	4' T5 LED	14	2	28	13	0.4	728	0.3	652
Dental Addition	Office/Dental	Office	FC	11	No Sensor	0	4	32	1	2,000	1.2	2,478	4' LED	11	4	44	15	0.7	1,320	0.6	1,158
Dental Addition	Mech	Storage	FL	6	No Sensor	0	2	32	1	200	0.3	68	4' LED	6	2	12	15	0.2	36	0.2	32
Dental Addition	Hallways	Hallway	PA	62	No Sensor	0	2	26	1	2,720	2.8	7,717	d Tube CFL LED	62	2	124	9	1.1	3,036	1.7	4,681
Dental Addition	Conf	Conference	FK, FB	6	No Sensor	0	3	32	1	1,280	0.5	649	4' LED	6	3	18	15	0.3	346	0.2	303
Dental Addition	Conf	Conference	PF	7	No Sensor	0	1	32	1	1,280	0.2	252	d Tube CFL LED	7	1	7	9	0.1	81	0.1	172
Dental Addition	Conf	Conference	UC	2	No Sensor	0	1	50	1	1,280	0.1	113	d Tube CFL LED	2	1	2	18	0.0	46	0.1	67
Dental Addition	Offices	Office	FK, FB	4	No Sensor	0	3	32	1	2,000	0.3	676	4' LED	4	3	12	15	0.2	360	0.2	316
Dental Addition	restrooms	Bathroom	FD, FJ	5	No Sensor	0	2	17	1	2,400	0.1	359	2' LED	5	2	10	10	0.1	240	0.0	119
Dental Addition	restrooms	Bathroom	FE	2	No Sensor	0	2	32	1	2,400	0.1	270	4' LED	2	2	4	15	0.1	144	0.1	126
Dental Addition	restrooms	Bathroom	PA	6	No Sensor	0	2	26	1	2,400	0.3	659	d Tube CFL LED	6	2	12	9	0.1	259	0.2	400
Dental Addition	Conf	Conference	SB - T5HO	3	No Sensor	0	2	28	1	1,280	0.1	189	4' T5 LED	3	2	6	13	0.1	100	0.1	89
Dental Addition	Storage	Storage	FA	2	No Sensor	0	2	32	1	200	0.1	23	4' LED	2	2	4	15	0.1	12	0.1	11
Phase 1 - NE Clinic	Clinic	Clinic	A, B	58	No Sensor	0	2	32	1	2,000	3.3	6,533	4' LED	58	2	116	15	1.7	3,480	1.5	3,053
Phase 1 - NE Clinic	Clinic	Hallway	C, D	45	No Sensor	0	2	26	1	2,720	2.1	5,601	d Tube CFL LED	45	2	90	9	0.8	2,203	1.2	3,398
Phase 2 Alternative Med	Clinic	Clinic	N	8	No Sensor	0	2	32	1	2,000	0.5	901	4' LED	8	2	16	15	0.2	480	0.2	421
Phase 2 Alternative Med	Clinic	Clinic	Orig. 2x4 w 4T8s	37	No Sensor	0	4	32	1	2,000	4.2	8,335	4' LED	37	4	148	15	2.2	4,440	1.9	3,895
Phase 2 Alternative Med	Clinic	Clinic	Orig. 2x2 w 2T8s	10	No Sensor	0	2	17	1	2,000	0.3	598	2' LED	10	2	20	8	0.2	320	0.1	278
Phase 2 Alternative Med	Clinic	Clinic	Orig. Recessed Cans	49	No Sensor	0	2	26	1	2,000	2.2	4,484	d Tube CFL LED	49	2	98	9	0.9	1,764	1.4	2,720
Phase 3 - Pharmacy	Clinic	Clinic	A, B	23	No Sensor	0	2	32	1	2,000	1.3	2,591	4' LED	23	2	46	15	0.7	1,380	0.6	1,211
Phase 3 - Pharmacy	Clinic	Clinic	C, D	15	No Sensor	0	2	26	1	2,000	0.7	1,373	d Tube CFL LED	15	2	30	9	0.3	540	0.4	833
Phase 3 - Pharmacy	Clinic	Clinic	Orig. 2x4 w 4T8s	5	No Sensor	0	4	32	1	2,000	0.6	1,126	4' LED	5	4	20	15	0.3	600	0.3	526
Phase 3 - Pharmacy	Clinic	Clinic	Orig. 2x2 w 2T8s	2	No Sensor	0	2	17	1	2,000	0.1	120	2' LED	2	2	4	8	0.0	64	0.0	56
TOTAL	-	-	-	724	-		-	-			42.8	88,345	-	724	-	1715	-	20.6	41,927	22.2	46,418

Typical Lighting Operating Hours								
		Hours / Day					Annual Hours	
Space Type	Average Hours Saved From Sensors/ BMS	Mon. - Fri.	Sat.	Sun.	Hours / Week	Weeks / Year	Without Sensors	With Sensors
Clinic	30%	10	0	0	50	40	**2,000**	**1,400**
Lobby	30%	12	12	12	84	40	**3,360**	**2,352**
Office	30%	10	0	0	50	40	**2,000**	**1,400**
Hallway	30%	12	4	4	68	40	**2,720**	**1,904**
Bathroom	30%	12	0	0	60	40	**2,400**	**1,680**
Storage	30%	1	0	0	5	40	**200**	**140**
Conference	30%	6	2	0	32	40	**1,280**	**896**
Kitchen	30%	9	9	9	63	40	**2,520**	**1,764**

Existing				Proposed	
Existing Lamp	Watts/ Lamp	Lamps/ Fixture	Ballast Factor	New Fixture	New Watts/ Lamp
4' pendants w	32	2	0.88	4' LED	15
Orig. 2x2 w 2T8	17	2	0.88	2' LED	8
Orig. 2x4 w 4T8	32	4	0.88	4' LED	15
Recessed C	26	2	0.88	ad Tube CFL LED R	9
SA	32	2	0.88	4' LED	15
PA	26	2	0.88	ad Tube CFL LED R	9
FC	32	4	0.88	4' LED	15
SB - T5HO	28	2	0.88	4' T5 LED	13
FL	32	2	0.88	4' LED	15
PB - 75PAR	75	1	1.00	LED Repl 75PAR	30
FK, FB	32	3	0.88	4' LED	15
PF	32	1	0.88	ad Tube CFL LED R	9
FD, FJ	17	2	0.88	2' LED	10
FA	32	2	0.88	4' LED	15
UC	50	1	0.88	ad Tube CFL LED R	18
FE	32	2	0.88	4' LED	15
A, B	32	2	0.88	4' LED	15
C, D	26	2	0.88	ad Tube CFL LED R	9
N	32	2	0.88	4' LED	15

New Lamp	Quantity of new Lamp
4' LED	**850**
2' LED	**132**
Quad Tube CF	**699**
4' T5 LED	**34**
LED Repl 75P	**0**
N/R	**0**

ROCK GAP
Energy Services

Plant	Fuel	System Efficiency	% of Load	Conversion Factor
Heating	Natural Gas	WW	100%	100
	#2 Fuel Oil	WW	0%	139.4
	Electric	1.0	0%	3.412

HVAC Interaction Calculation*

HVAC Cooling Interaction Factor ($HVAC_C$)	HVAC Cooling Demand Factor ($HVAC_D$)	Estimated Lighting Savings in Cooled Space	Cooling Demand Savings (kW)	Cooling Energy Savings (kWh)	HVAC Heating Interaction Factor ($HVAC_O$)	Estimated Lighting Savings in Heated Space	Gas Heating Savings (therms)	Oil Heating Savings (gal)	Electric Heating Savings (kWh)
0.11	0.20	80%	**3.6**	**4,085**	-0.010	100%	**-464**	**0**	**0**

Annual Months of Demand Savings	12
Demand Coincidence Factor	1.0

ROCK GAP
Energy Services

ECM [illegible]
Health Department
Energy Audit
February-2019
NORESCO

ECM [illegible]	
[illegible]	[illegible]
[illegible]	[illegible]
[illegible]	[illegible]
[illegible]	[illegible]
[illegible]	[illegible]
[illegible]	[illegible]
[illegible]	[illegible]
[illegible]	[illegible]

Baseline Domestic Hot & Cold Water Consumption Estimates

Plant	Fuel	Efficiency	% of Load	Conversion Factor
DHW	Natural Gas	78.0%	100%	100
	#2 Fuel Oil	85.0%	0%	139.4
	Electric	1.00	0%	3.413

[illegible]	[illegible]
294	65%

Total # of Visitors	Total # of Staff	Days per Year
191	0	260

Average Cold Water Temp. In (°F)	Average DHW Temp. Out (°F)	Temp Rise (°F)
50	130	80

Existing

Plumbing Fixtures	Daily Uses per Occupant	Flow Rate (gpf, gpm)	Duration (flush, Minutes)	Average Measured Output Temp	% CW	% DWH	Annual CW Gallons (1)	Annual DHW Gallons (2)
Toilets	1.35	1.6	1	N/A	100%	0%	107,349	0
Urinals	2	1	1	N/A	100%	0%	99,397	0
faucets	3.35	1.2	0.5	110	25%	75%	24,973	74,920
Showers	0	0	0	110	25%	75%	0	0
							231,719	74,920

Annual CW Gallons (1)	Annual DHW Gallons (2)	Total Annual Gallons	Utility Bill Gallons	Error From Utility Bills
231,719	**74,920**	**306,639**	NA	#VALUE!
76%	**24%**			

Proposed

Plumbing Fixtures	Daily Uses per Occupant	Flow Rate (gpf, gpm)	Duration (flush, Minutes)	Average Measured Output Temp	% CW	% DWH	Annual CW Gallons (1)	Annual DHW Gallons (2)
Toilets	1.35	1	1	N/A	100%	0%	67,093	0
Urinals	2	0.125	1	N/A	100%	0%	12,425	0
faucet	3.35	0.5	0.5	110	25%	75%	10,406	31,217
Showers	0	0	0	110	25%	75%	0	0
							89,923	31,217

Annual DHW Savings (Gallons)	DHW Heat Output (kBtu) (1)	Energy Savings			Water Savings
		Therms	Gallons (Fuel Oil)	kWh	Gallons
43,704	29,124	**373**	**0**	**0**	**185,499**

Plumbing Fixtures	
Toilets	21
Urinals	2
faucet	14

fixture counts are approximate and do not include the exam room faucets which should not be replaced.

Notes:

1) Plumbing Fixtures Annual CW Gallons = (# Visitors + # Staff) x Days/Year x Daily Uses per Occupant x Fixture Flow Rate x Duration x % CW
2) Plumbing Fixtures Annual HW Gallons = (# Visitors + # Staff) x Days/Year x Daily Uses per Occupant x Fixture Flow Rate x Duration x % HW
3) Kitchen Cooking Annual CW Gallons = (# Visitors + # Staff) x Days/Year x (Gallons of Cooking Water + Drinking Water /Person/Meal) x % CW
4) Kitchen Cooking Annual HW Gallons = (# Visitors + # Staff) x Days/Year x (Gallons of Cooking Water + Drinking Water /Person/Meal) x % HW
5) Dishwasher Annual CW Gallons = Days/Year x Flow Rate x Hours/Day x Load Factor x % CW
6) Dishwasher Annual HW Gallons = Days/Year x Flow Rate x Hours/Day x Load Factor x % HW
7) Clothes Washer Loads/Year = Loads/Day x Days/Year
8) Clothes Washer Lbs/Year = Lbs Capacity x Loads/Year x Load Factor
9) Clothes Washer Annual CW Gallons = Lbs/Year x Water Consumption Factor x % CW
10) Clothes Washer Annual HW Gallons = Lbs/Year x Water Consumption Factor x % HW

ECM [redacted] I[redacted] L[redacted]

Economic Summary

ECM[redacted]	
E[redacted]	[redacted]
A[redacted] M[redacted] D[redacted]	[redacted]
[redacted] G[redacted]	[redacted]
E[redacted] C[redacted]	[redacted]
E[redacted] I[redacted] C[redacted]	[redacted]
[redacted]	[redacted]
M[redacted] C[redacted] M[redacted]	[redacted]

Existing Condition

[redacted] CFL[redacted]

F[redacted] E[redacted] L[redacted] F[redacted] L[redacted] F[redacted]

Recommendation

[redacted] LED [redacted]

[redacted]

[redacted]

ECM LED

C E F K

G

D

M F

Fixture	Quantity of new Lamps
F LED L	
CFL LED	
F LED L	
L F F LED L	

A C C M

C

F F

[redacted]

[redacted] LED [redacted] LED [redacted]

[redacted] C F [redacted] LED [redacted] LED [redacted]

[redacted] LED [redacted] LED [redacted]

[redacted] LED [redacted] LED [redacted]

E [redacted]

[illegible] H[illegible] B[illegible] E[illegible] A[illegible]

			Existing				Proposed				
Area	Sub Area	Space Type	Lamp Type	# of Fixtures	Lamps / Fixture	Watts / Lamp	Fixture Type	# of Fixtures	Lamps / Fixture	Total New Lamps	Watts / Lamp
Original Building	SW Wing	Office	Orig. 2x4 w 4T8s	39	4	32	4' LED	39	4	156	15
Original Building	SW Wing	Office	Orig. Recessed Cans	63	2	26	Quad Tube CFL LED Repl	63	2	126	9
Original Building	SW Wing	Office	Orig. 2x2 w 2T8s	9	2	17	2' LED	9	2	18	8
Original Building	E-W Hallway and Lobby	Hallway	Orig. Recessed Cans	46	2	26	Quad Tube CFL LED Repl	46	2	92	9
Original Building	E-W Hallway and Lobby	Office	Orig. 2x4 w 4T8s	4	4	32	4' LED	4	4	16	15
Original Building	West Wing	Clinic	Orig. 2x4 w 4T8s	28	4	32	4' LED	28	4	112	15
Original Building	West Wing	Clinic	Orig. 2x2 w 2T8s	26	2	17	2' LED	26	2	52	8
Original Building	West Wing	Clinic	Orig. Recessed Cans	20	2	26	Quad Tube CFL LED Repl	20	2	40	9
Original Building	West Wing	Clinic	Orig. 4' pendants w 2 T8s	17	2	32	4' LED	17	2	34	15
Original Building	North Wing	Conference	Orig. 2x2 w 2T8s	14	2	17	2' LED	14	2	28	8
Original Building	North Wing	Conference	Orig. Recessed Cans	20	2	26	Quad Tube CFL LED Repl	20	2	40	9
Original Building	North Wing	Conference	Orig. 2x4 w 4T8s	9	4	32	4' LED	9	4	36	15
Original Building	N-S Hallway	Hallway	Orig. Recessed Cans	19	2	26	Quad Tube CFL LED Repl	19	2	38	9
Dental Addition	Operatory/Offices	Office	SA	28	2	32	4' LED	28	2	56	15
Dental Addition	Office/Brkrm	Office	SB - T5HO	14	2	28	4' T5 LED	14	2	28	13
Dental Addition	Office/Dental	Office	FC	11	4	32	4' LED	11	4	44	15
Dental Addition	Mech	Storage	FL	6	2	32	4' LED	6	2	12	15
Dental Addition	Hallways	Hallway	PA	62	2	26	Quad Tube CFL LED Repl	62	2	124	9
Dental Addition	Conf	Conference	FK, FB	6	3	32	4' LED	6	3	18	15
Dental Addition	Conf	Conference	PF	7	1	32	Quad Tube CFL LED Repl	7	1	7	9
Dental Addition	Conf	Conference	UC	2	1	50	Quad Tube CFL LED Repl	2	1	2	18
Dental Addition	Offices	Office	FK, FB	4	3	32	4' LED	4	3	12	15
Dental Addition	restrooms	Bathroom	FD, FJ	5	2	17	2' LED	5	2	10	10
Dental Addition	restrooms	Bathroom	FE	2	2	32	4' LED	2	2	4	15
Dental Addition	restrooms	Bathroom	PA	6	2	26	Quad Tube CFL LED Repl	6	2	12	9
Dental Addition	Conf	Conference	SB - T5HO	3	2	28	4' T5 LED	3	2	6	13
Dental Addition	Storage	Storage	FA	2	2	32	4' LED	2	2	4	15
Phase 1 - NE Clinic	Clinic	Clinic	A, B	58	2	32	4' LED	58	2	116	15
Phase 1 - NE Clinic	Clinic	Hallway	C, D	45	2	26	Quad Tube CFL LED Repl	45	2	90	9
Phase 2 Alternative Med	Clinic	Clinic	N	8	2	32	4' LED	8	2	16	15
Phase 2 Alternative Med	Clinic	Clinic	Orig. 2x4 w 4T8s	37	4	32	4' LED	37	4	148	15
Phase 2 Alternative Med	Clinic	Clinic	Orig. 2x2 w 2T8s	10	2	17	2' LED	10	2	20	8
Phase 2 Alternative Med	Clinic	Clinic	Orig. Recessed Cans	49	2	26	Quad Tube CFL LED Repl	49	2	98	9
Phase 3 - Pharmacy	Clinic	Clinic	A, B	23	2	32	4' LED	23	2	46	15
Phase 3 - Pharmacy	Clinic	Clinic	C, D	15	2	26	Quad Tube CFL LED Repl	15	2	30	9
Phase 3 - Pharmacy	Clinic	Clinic	Orig. 2x4 w 4T8s	5	4	32	4' LED	5	4	20	15
Phase 3 - Pharmacy	Clinic	Clinic	Orig. 2x2 w 2T8s	2	2	17	2' LED	2	2	4	8
TOTAL	-	-	-	724	-	-	-	724	-	1715	-

[illegible] M[illegible]

[illegible] C[illegible] [illegible] [illegible] [illegible]

[illegible] C[illegible] [illegible] A[illegible]

[illegible]

[illegible] C[illegible]

[illegible] C[illegible]

[illegible] D[illegible]

[illegible] F[illegible]

[illegible] C[illegible]

[illegible] A[illegible]

[illegible] C[illegible] [illegible] [illegible] [

[illegible] D[illegible] C[illegible] [illegible]

T5 8W HE 2FT. DIR TITANIUM LED SERIES

GREENCREATIVE

PRO

DIRect

8W REPLACES

14W Fluo.

60% Energy Savings

- Compatible with Instant Start & Programmed Start ballasts
- Easy to install - Plug & Play Direct
- Exceptional efficacy 138 LPW
- Suitable for use in totally enclosed fixtures
- Powerful light output 1100 lumens
- Dimmable

50,000 H

ELECTRONIC BALLAST COMPATIBLE

PLUG & PLAY DIRect

5 YR WARRANTY

80 CRI (Ra)

ENCLOSED*

HIGH LUMEN EFFICIENCY - SUPERIOR PERFORMANCE

T5 8W HE 2FT. DIR TITANIUM LED SERIES

GREENCREATIVE

SPECIFICATIONS**

Product Model	57958 8T5HE/2F/830/DIR	57959 8T5HE/2F/835/DIR	57960 8T5HE/2F/840/DIR
Type	T5	T5	T5
Base	Mini Bi-Pin G5	Mini Bi-Pin G5	Mini Bi-Pin G5
Power (W)	8	8	8
Voltage - Frequency	120-277V 50-60Hz	120-277V 50-60Hz	120-277V 50-60Hz
Color Temp. (ANSI)	Warm White 3000K	Neutral White 3500K	Cool White 4000K
CRI (Ra)	80	80	80
Typical lumens (lm)	950	950	1100
Efficacy (LPW)	119	119	138
Light Emitting Area	270°	270°	270°
Beam Angle	120°	120°	120°
Dimmable	Yes	Yes	Yes
Power Factor	0.9	0.9	0.9
THD	<20%	<20%	<20%
Rated Lifetime - L70 (hrs.)	50,000	50,000	50,000
Dia. x MOL	0.67"x22.17" (17x563mm)	0.67"x22.17" (17x563mm)	0.67"x22.17" (17x563mm)
Weight (lb. / g)	0.17lb. / 78g	0.17lb. / 78g	0.17lb. / 78g

PROGRAM START BALLAST PERFORMANCE

Bare Lamp (W)	System (W)	3000K Lumens	3500K Lumens	4000K Lumens
8	10	950	950	1100

Testing Method: Above system power is half the total system power of a 2-tube installation using an electronic ballast. Power and lumen output will vary based on ballast and fixture type. Above data is indicative only.

* Suitable for use in totally enclosed fixtures
** Specification data is preliminary and may be subject to change
*** Suitable for damp locations. Not for use where directly exposed to the weather or water

LED T5 | DIRECT REPLACEMENT

Product Features

- Easy Plug-and-Play Installation - No Rewiring Required
- Operates with Electronic Ballasts[1]
- Identical Look to Standard Fluorescent Lamp
- Full Glass Lens with 240 Degree Light Distribution
- High Efficacy with 50% Energy Savings
- DLC QPL Listed
- UL Listed for Direct Fuorescent Lamp Replacement
- 5-Year Warranty
- ETL Sanitation Listed for Food Service Applications

$90 Total Life Savings[3]

Applications

- Office Buildings/Schools
- Warehouse
- Manufacturing Facilities
- Parking Garages

Model Number[2]	Lamp Type	Base	Watts / Replaced	Lumens	CCT	MOL	Distribution	Certification	Warranty
LBT5F16xx	Plug-n-Play	G5	13W / 28W	1650 lm	3500K 4100K 5000K	45.8”	240°	UL	5-Years
LBT5F33xx	Plug-n-Play	G5	31W / 54W	3300 lm	3500K 4100K 5000K	45.8”	240°	UL/DLC	5-Years

NOTE 1: Please reference our Ballast Compatibility List
NOTE 2: Replace xx with 35 for 3500K, 41 for 4100K, and 50 for 5000K Color Temperature
NOTE 3: Savings calculated by 50,000 hour Lifetime, Electricity rated $0.12, and 3 Operating Hours Per Day.

LED T8 | DIRECT REPLACEMENT

Product Features

- Easy Plug-and-Play Installation - No Rewiring Required
- Operates with Electronic Ballasts[1]
- Identical Look to Standard Fluorescent Lamp
- Full Glass Lens with 240 Degree Light Distribution
- High Efficacy with 50% Energy Savings
- UL Listed for Direct Fluorescent Lamp Replacement
-
- ETL Sanitation Listed for Food Service Applications
- 5-Year Warranty

$125 Total Life Savings[3]

Applications

- Office Buildings/Schools
- Warehouse
- Manufacturing Facilities
- Parking Garages

Model Number[2]	Lamp Type	Base	Watts / Replaced	Lumens	CCT	MOL	Distribution	Certification	Warranty
LBT8F12xxB	Plug-n-Play	G13	9W / 17W	1200 lm	3500K 4100K 5000K	24”	240°	UL/DLC	5-Years
LBT8F16xxB-3FT	Plug-n-Play	G13	13W / 32W	1650 lm	3500K 4100K 5000K	36”	240°	UL	5-Years
LBT8F16xxB	Plug-n-Play	G13	13W / 32W	1650 lm	3500K 4100K 5000K	48”	240°	UL/DLC	5-Years
LBT8F18xxB	Plug-n-Play	G13	15W / 32W	1800 lm	3500K 4100K 5000K	48”	240°	UL/DLC	5-Years
LBT8F22xxB	Plug-n-Play	G13	19W / 32W	2200 lm	3500K 4100K 5000K	48”	240°	UL/DLC	5-Years

NOTE 1: Please reference our Ballast Compatibility List.
NOTE 2: Replace xx with 35 for 3500K, 41 for 4100K, and 50 for 5000K Color Temperature
NOTE 3: Savings calculated by 50,000 hour Lifetime, Electricity rated $0.12, and 3 Operating Hours Per Day.

S29850

9WPLH/LED/830/DR/4P
9W LED PL 4-Pin; 3000K; 950 Lumens; G24q base; 50000 Average rated hours; 120 Deg. beam spread

S29850

Features
- Replaces 26, 32, and 42 watt CFLs
- Direct Replacement - for use with Electronic, Instant Start, Rapid Start, and Programmed Start ballasts with no rewiring required. Ballast required.
- Instant on to full brightness / no flickering
- Horizontal operation
- Up to 70% energy saving
- Long life - 50,000 hours
- 5 year warranty

*Ballast required (See Ballast Compatibility Chart)

Item Number	UPC	Watts	Fluorescent Equivalent	Lamp Shape	Base	Lamp Code	Dimmable/Non-Dimmable
S29850	045923298509	9	26, 32, and 42 watt CFL	PL	G24q	9WPLH/LED/830/DR/4P	Non-Dimmable

Finish	MOL In Inches	MOD In Inches	Initial Lumens	Average Rated Hours	Kelvin Temp	Color	CRI
Frost	6-5/8"	1-3/32"	950	50000	3000	Soft White	82

Beam Spread Deg	Operating Temperature	Package Type	CEC Status	DLC ID:	RoHS Compliant	UL or ETL Listed	UL Classification
120	-20C (-4F) to a maximum of +45C (+113F)	Box	Lawful for sale in California	PLJAGBSSPJZJ DLC Search	Yes	Yes	cULus Classified - Damp Location Rated

Warranty
5 Year Limited

ECM [illegible] L[illegible] F[illegible] [illegible] F[illegible]

Economic Summary

ECM[illegible]
E[illegible]
A[illegible] M[illegible] D[illegible]
[illegible] G[illegible]
[illegible]
E[illegible] C[illegible]
E[illegible] I[illegible] C[illegible]
[illegible]
M[illegible] C[illegible] M[illegible]

Existing Condition

[illegible] E[illegible] [illegible] G[illegible] F[illegible] G[illegible] F[illegible] G[illegible] M[illegible] G[illegible] M[illegible]

F[illegible] E[illegible] F[illegible]

Recommendation

[redacted]

- [redacted]
- [redacted]
- [redacted]

[redacted]

[redacted]

[redacted]

[redacted]

[redacted]

[redacted]

[redacted]

[redacted]

[redacted]

[redacted]

[redacted]

[redacted]

[redacted]

[redacted]

[redacted]

Fixture Type	Flow Rate (gpf, gpm)	Fixture Quantity	Replacement Fixture Flow Rate (gpf, gpm)	Replacement Fixture Quantity
Toilets	1.6	21	1	21
Urinals	1	2	0.125	2
Faucets	1.2	14	0.5	14

[illegible] C[illegible]

[illegible] C[illegible] [illegible] A[illegible]

[illegible]

[illegible] C[illegible]

[illegible] D[illegible]

[illegible] F[illegible] B[illegible] D[illegible]

[illegible] C[illegible]

[illegible] A[illegible]

[illegible] C[illegible]

[illegible]

TOTO®

UT105U(V)(G)

0.125GPF High-Efficiency Washout Urinal

FEATURES

- Compact urinal with concealed integral trap
- Washout flush action with 3/4" top or back spud inlet
- Complete with low profile dome strainer
- Optional CeFiONtect™ ceramic glaze - CeFiONtect glaze prevents debris and mold from sticking to ceramic surfaces, leading to fewer chemicals.

MODELS

- UT105U
  Urinal with 3/4" top spud inlet
- UT105UG
  Urinal with 3/4" top spud inlet and CeFiONtect
- UT105UV
  Urinal with 3/4" back spud inlet
- UT105UVG
  Urinal with 3/4" back spud inlet and CeFiONtect

ADDITIONAL ITEMS

- THU3017
  Stainless Steel Urinal Drain Cover

FLUSH VALVES EcoPower®	
TEU1UA12#CP	0.125GPF
TEU2UA11#SS	0.125GPF
TEU3UA11#SS	0.125GPF

COLORS/FINISHES

- #01 Cotton (CeFiONtect optional)

PRODUCT SPECIFICATION

The wall-mounted, ADA compliant, high-efficiency washout urinal shall be 0.125GPF/0.47LPF when paired with a 0.125GPF flushometer valve. Urinal shall have optional CeFiONtect ceramic glaze. Urinal specified shall be model UT105U___.

CeFiONtect

Dual-Max

CODES/STANDARDS

- Meets and exceeds ASME A112.19.2/CSA B45.1,
- Certifications: IAPMO(cUPC), State of Massachusetts , City of Los Angeles
- Code compliance: UPC, IPC, NSPC, NPC Canada, and others
- Legislative Compliance: California AB715, CALGreen Title 24, California Energy Commission Standards
- ADA compliant

UT105U(V)(G)

0.125GPF High-Efficiency Washout Urinal

SPECIFICATIONS

- Water Use 0.125GPF/0.47LPF
- Flush System Washout flush action
- Warranty One Year Limited Warranty
- Material Vitreous china
- Min. Water Pressure 15 psi (flowing)
- Height (Urinal Only) 21-3/4"
- Width 12-1/4"
- Rim 14"
- Shipping Weight UT105U(V)(G) - 37.5lbs
- Shipping Dimensions UT105U(V)(G)
  24" L x 13-3/4" W x 17" H

INSTALLATION NOTES

Install this product according to the installation guide.

Refer to manufacturer's instructions and local codes for flushometer requirements.

Will comply with ADA when installed per Section 605 - Urinals of the ADA 2010 Accessible Design Standard with maximum rim height of 17" and minimum depth of 13-1/2".

Will comply with CSA B651 when installed per Clause 6.2.8 Urinals of the CSA 2012 Accessible Design Standard with maximum rim height of 17" and minimum depth of 13-1/2".

Ultra-low high efficiency urinals require a system with a minimum 2% slope. Maximum drainage capacity rated at 6.6 gal/min (25 L/min). Adjust angle stop accordingly to prevent overflow. Confirm with local codes and standards for floor drain requirement.

Top Spud Installation

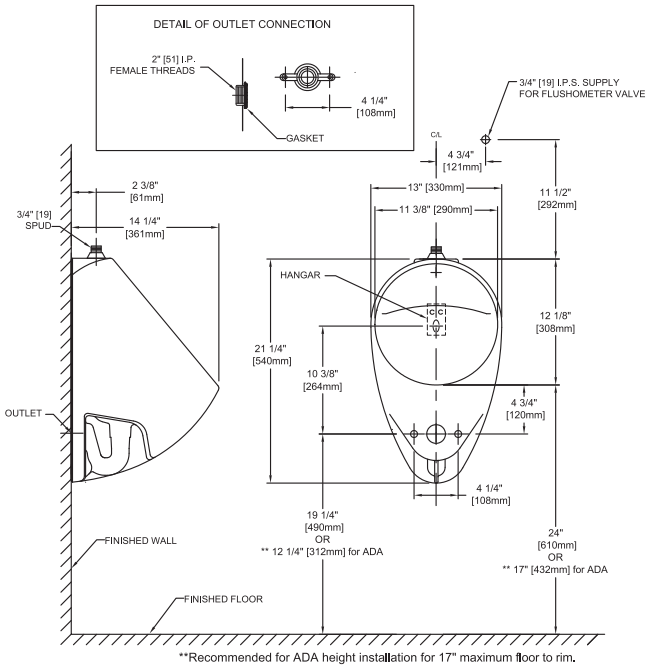

**Recommended for ADA height installation for 17" maximum floor to rim.

Back Spud Installation

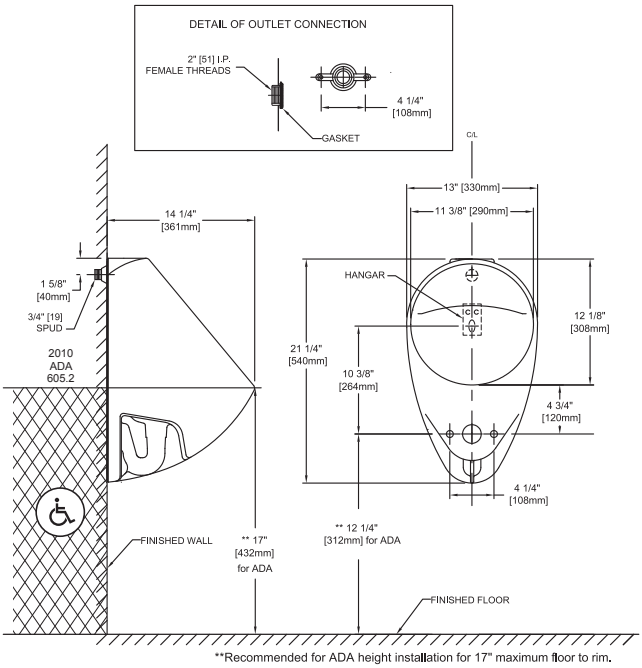

**Recommended for ADA height installation for 17" maximum floor to rim.

TOTO®

CT705UN(G)

Commercial Flushometer Floor-Mounted Toilet – 1.0 GPF

FEATURES

- Floor-mounted
- Elongated front bowl
- Optional CeFiONtect™ glaze prevents debris from sticking to ceramic surfaces, making them easier to clean
- Clear glazed trapway coating
- 10"-12" rough-in

MODELS

- CT705UNG
  Commercial, floor-mounted toilet with CeFiONtect ceramic glaze
- CT705UN
  Commercial floor-mounted toilet

ADDITIONAL ITEMS

- SC534 seat
- SC134 seat

ECOPOWER® FLUSH VALVES	
Exposed	
TET1UA32#CP	1.0 GPF
Exposed 24" Breaker	
TET6UA32#CP	1.0 GPF
Concealed 14" x 12"	
TET2UA32#CP	1.0 GPF
Concealed 4" x 4"	
TET3UA32#SS	1.0 GPF

COLORS/FINISHES

- Standard
  #01 Cotton

Flush valve sold separately

CeFiONtect

PRODUCT SPECIFICATION

The floor-mounted, low consumption siphon jet flushing toilet shall be 1.0 GPF (3.8 LPF) when paired with a 1.0 GPF flush valve. Toilet shall have optional CeFiONtect ceramic glaze. Toilet shall be TOTO Model CT705UN____.

CODES/STANDARDS

- Meets and exceeds ASME A112.19.2/CSA B45.1
- Certifications: IAPMO(cUPC), State of Massachusetts, City of Los Angeles, and others
- Code compliance: UPC, IPC, NSPC, NPC Canada, and others

CT705UN(G)

Commercial Flushometer
Floor-Mounted Toilet – 1.0 GPF

SPECIFICATIONS

Water Use	1.0 GPF (3.8 LPF)
Flush System	Siphon Jet Flushing Action
Water Surface	10-3/4" x 9-1/4"
Water Pressure	Min: 35 psi (Flowing) Max: 80 psi (Static)
Min. Flow Rate	24 GPM
Trap Diameter	1-7/8"
Trap Seal	2-3/8"
Rough-in	12" or 10"
Material	Vitreous China
Warranty	One Year Limited Warranty
Shipping Weight	50 lbs
Shipping Dimensions	26-1/2"L x 9-1/2" W1 x 16-1/4"W2 x 17"H

INSTALLATION NOTES

Spuds are unique for TOTO product. For replacement spuds, contact TOTO for part number THU073R.

Can be used with exposed or concealed top inlet flush valves.

DIMENSIONS

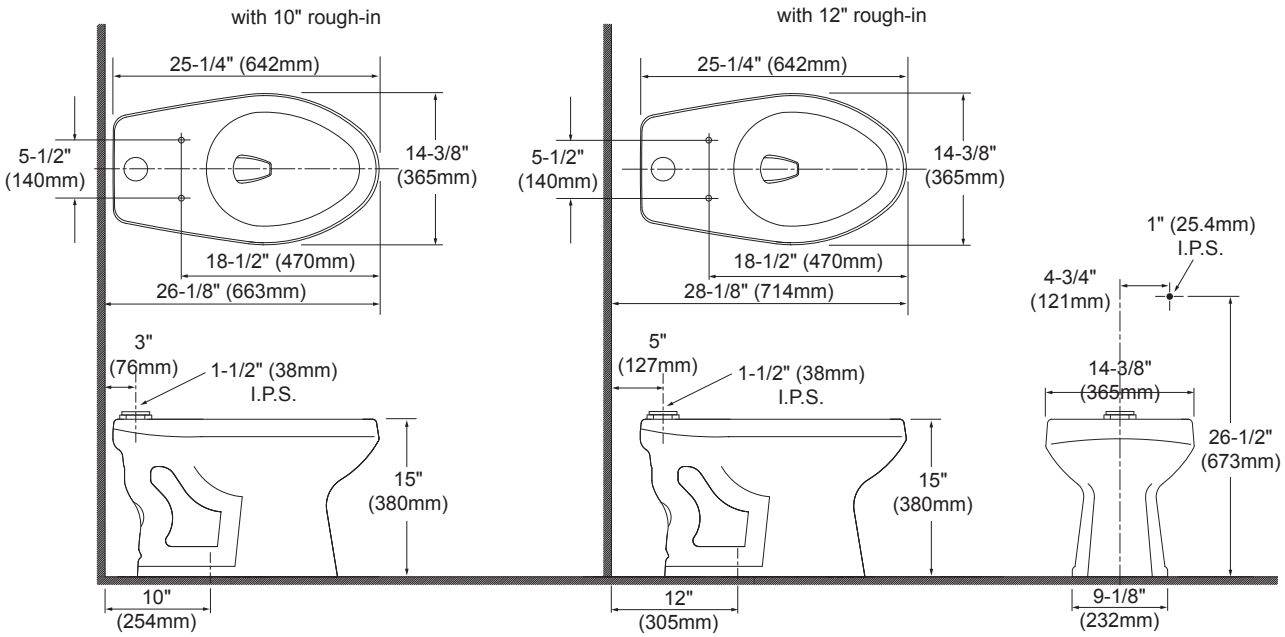

OPTIONS

Flow Rate

- [ ] 0.5 gpm (2 Lpm) (0.5GPM)
- [ ] 0.35 gpm (1 Lpm) (0.35GPM)

Spout Type

- [ ] Pedestal

Control Access

- [ ] Below Deck

Mixer

- [ ] Back-Check Tee (TEE)
- [ ] Below Deck Manual Mixing Valve (BDM)
- [ ] Below Deck Thermostatic Mixing Valve (BDT)

NOTES

For product line drawings, view model-specific spec sheets.

All information contained within this document subject to change without notice.

Find a matching soap dispenser for this faucet.
Find a compatible sink for this faucet.

Image for a standard SF-2350 shown

DESCRIPTION

Sloan® Battery-Powered Deck-Mounted Mid Integrated Base Body Faucet

FEATURES

Commercial Grade, ADA Compliant, Electronic, Sensor-Activated, Brass 4 Centerset Hand Washing Faucet with the following features:

- Splash-proof Circuit Control Module
- Adjustable Infrared Sensor Range
- 36” (914 mm) Long Sensor Cable
- 24” (610 mm) Long Flex Hose
- Filtered Solenoid Valve with serviceable Strainer Filter
- Includes Four (4) AA-size Batteries
- Includes appropriate Mounting Hardware
- 1 Year limited warranty

DOWNLOADS

- SF Series Installation Instructions
- SF Series (FR) Installation Instructions
- SF Series (SP) Installation Instructions
- SFP 35-A Installation Instructions
- Trim Plates Repair and Maintenance Guide
- Sloan 2300/2350 Repair and Maintenance Guide
- Additional Downloads

Sloan 10500 Seymour Ave, Franklin Park, IL 60131
Phone: 800.982.5839 • Fax: 800.447.8329 • sloan.com

ECM [illegible] E[illegible] L[illegible] [illegible]

Economic Summary

ECM[illegible] [illegible]
E[illegible] [illegible] [illegible]
A[illegible] M[illegible] D[illegible] [illegible] [illegible]
E[illegible] [illegible] C[illegible] [illegible]
E[illegible] [illegible] I[illegible] [illegible] C[illegible]
[illegible] [illegible] [illegible] [illegible]
M[illegible] [illegible] C[illegible] [illegible] [illegible] M[illegible] [illegible]

Existing Condition

[illegible] [illegible] [illegible] [

[illegible]

[illegible] G[illegible]

[illegible] D[illegible]

[illegible]

[illegible]

[illegible]

C[illegible]

[illegible]

M[illegible]

[illegible]

[illegible]

Description of Work	Unit	Qty
Replace parking lot pole fixtures with 150watt LED shoebox fixture	Per Fixture	10
Replace 70 watt metal halide wall pack fixtures with 12 watt LED fixtures	Per Fixture	45
Retrofit wall and fence mounted CFL fixtures with 9watt plug and play LED lamps	Per Lamp	57

[illegible]

[illegible]

[illegible] M[illegible] M[illegible] F[illegible] [illegible] [illegible] E[illegible] [illegible] L[illegible]

[illegible]

[illegible]

[illegible]

[illegible]

[illegible] D[illegible] [illegible] [illegible] [

[illegible]

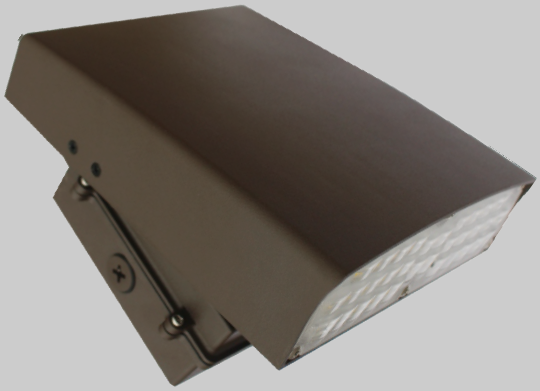

WMK12 / WMK30 / WMK40 WMK50

Wallpack light series

This series has a thin, smart and stylish shape with excellent cooling and high lumen efficacy of 110 lm/w. With various mounting options, this series is a great choice for anyone needing large amounts of light at a energy saving cost.

Features

- *Corrosion-Resistant Coating Finish*
- *Imported high-dense aluminum alloy housing*
- *High transparency and weather resistant lens*
- *Color options: Gray, Bronze*

Applications

- *Building exteriors*
- *Walls and corridors*

Installation Diagram

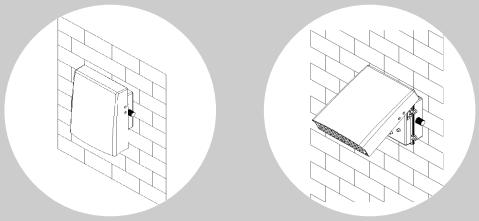

Specifications

General	**Model:**	**WMK12**	**WMK30**	**WMK40**	**WMK50**
	Lumen Efficacy:	110 lm/w	110 lm/w	110 lm/w	110 lm/w
	Lumen Output:	1,320 lm	3,300 lm	4,400 lm	5,500 lm
Electrical	**Input Power:**	12W	30W	40W	50W
	Input Voltage:	100-277V	100-277V	347-480V	100-277V
	Power Factor:	>90%	>90%	>90%	>90%
Color	**CCT:**	3000k-5700k	3000k-5700k	3000k-5700k	3000k-5700k
	CRI:	>80	>80	>80	>80
Operational	**Dimmable:**	No	No	Yes	No
	Dimensions:	6 in x 5 in x 3.4 in	11 in x 7.6 in x 4.5 in	11 in x 7.6 in x 4.5 in	11 in x 7.6 in x 4.5 in
	Rating:	IP65	IP65	IP65	IP65
	Mounting Option:	WM (Wall mount)	WM (Wall mount)	WM (Wall mount)	WM (Wall mount)
	Warranty:	5 Year	5 Year	5 Year	5 Year

Sold by: LEDLightExpert.com
800-674-9420
sales@LEDLightExpert.com

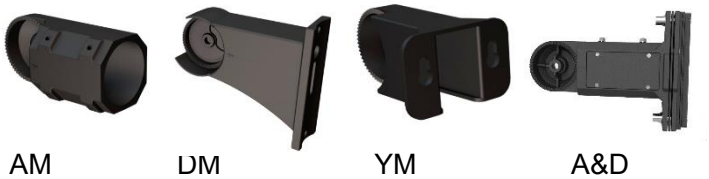

AM DM YM A&D

P/N：RG-NextGen-2--S-G07-150_WCT3A1-abcdef

Note：

The letter "a" can be can be 2 letters represent lamp colors; “BH = Black、WH=White、BR=Brown or Customized”

The letter "b" can be "P" or blank to represent Photocell or None Photocell;

The letter "c" can be "S" or blank to represent Surge protector or None Surge protector;

The letter "d" can be "M" or None, represent Motion sensor or No Motion sensor.

The letter "e" can be "AM","DM","YM","A&D" represent bracket type.

The letter "f"can be any two-digit number to represent CCT. ”40=4000k、45=4500k、50=5000k、57=5700k”

DIMENSIONS

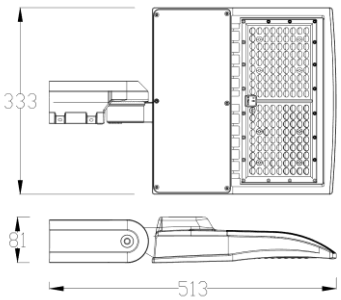

AM

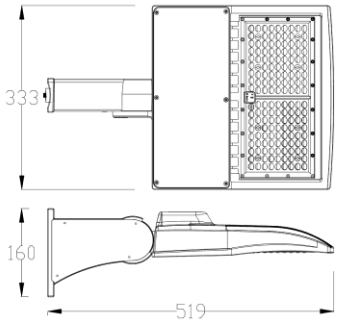

DM

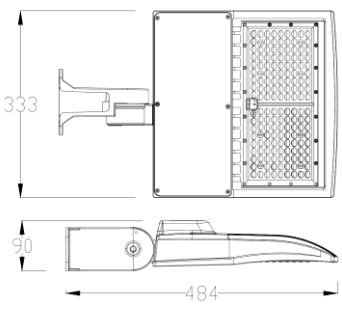

YM

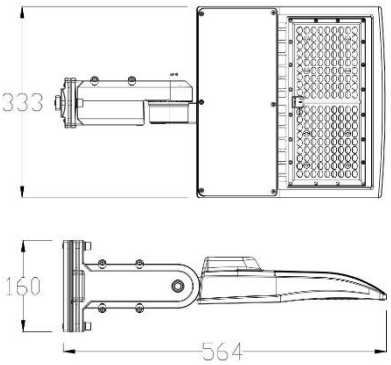

A&D

ADVANTAGE

- UL cUL DLC Premium certificate.
- Seoul /Lumileds Chip, high CRI.
- IP65 driver, input voltage 100-277VAC.
- Output constant current lever can be adjusted through output cable with 1-10V.
- No UV or IR in the beam.
- Easy to install and operate.
- Energy saving, long lifespan.
- Light is soft and uniform, safe to eyes.
- Instant start, NO flickering, NO humming.
- Green and eco-friendly without mercury.
-

APPLICATION

- Outdoor basketball court, tennis court.
- Badminton court, the football field.
- The school playground, stadium.
- Community leisure entertainment plaza, road lamp etc.

SPECIFICATIONS

OPTICAL	Input Power	150W
	Lumen	19500-21000LM
	Lumen Efficacy	125-140 LM/W
	Color Temperature	4000K, 4500K, 5000K, 5700K
	CRI	>70
	Viewing Angle	150*85 Degree（Type Ⅲ）
ELECTRICAL	Input Voltage	100-277VAC 50/60Hz (480vac available to order)
	PF	≥0.9
	THD	≤20%
	Driver Model	Meanwell HLG-150H-48B (1-10Vdc Dimmer)
	Optional Accessory	Photocell / Surge protector/ Motion sensor
MATERIALS	LED Brand	SEOUL / LUMILEDS
	LED Type	SMD3030
	LED QTY	308 PCS
	Housing	Aluminum Alloy
	Housing Color	Black / Brown/ white /
	Waterproof Rating	WET（IP65）
OTHERS	Operating Temperature	-20℃ TO 40℃
	Operating Humidity	20％-90％ RH
	Storage Temperature	-30℃ TO 80℃
	Storage Humidity	10％-95％ RH
	Warranty Time	5 Years

DLC Premium Rated – A Tougher Certification

Not an initial light spike! DLC Premium requires 90% Light Maintenance for over 36,000 Hours, Dark Sky Compliance and Additional Performance Criteria Demands!

Model# RG-NextGen-2-S-G07-150WCT3B1-a[P;blank][S;blank][M;blank]e57

Manufacturer: RuggedGrade
Brand: RuggedGrade
Technical Requirements Version: 4.3
Date Qualified: 05/16/2018
Product ID: PLEC6X5OS45Z

Categorization

Main: Outdoor Luminaires
General Application: High Output
Primary Use: Architectural Flood and Spot Luminaires
Classification: Premium
Is Parent Product: No
DLC Family Code: NANOUI
Listing Status: Listed

Reported Data | Zonal Lumens | Spacing Criteria | Product Features | Version History | Family Data

Light Output: 20050 lm
Wattage: 155.68 W
Efficacy: 128.79 lm/W
Power Factor: 0.9
CCT: 5700 K
CRI: 70
Total Harmonic Distortion: 15 %

LIGHT DISTRIBUTION TESTING PARAMETERS

Luminaire Property

Luminaire Manufacturer:
Voltage: 199.5 V
Current: 0.7751 A
Power: 152.47 W
Power Factor: 0.9836

Photometric Results

IES Classification: Type III
Longitudinal Classification: Medium
Total Rated Lamp Lumens: 19179.2 lm
Measurement Flux: 19179.2 lm
Efficiency: 100%
Downward Ratio: 100%
Upward Ratio: 0%
Luminaire Efficacy Rating (LER): 125.79
Central Intensity: 4647.29 cd
Max. Intensity: 6975.57 cd
Pos of Max. Intensity: H22.5 V69

Luminous Intensity Distribution Curve

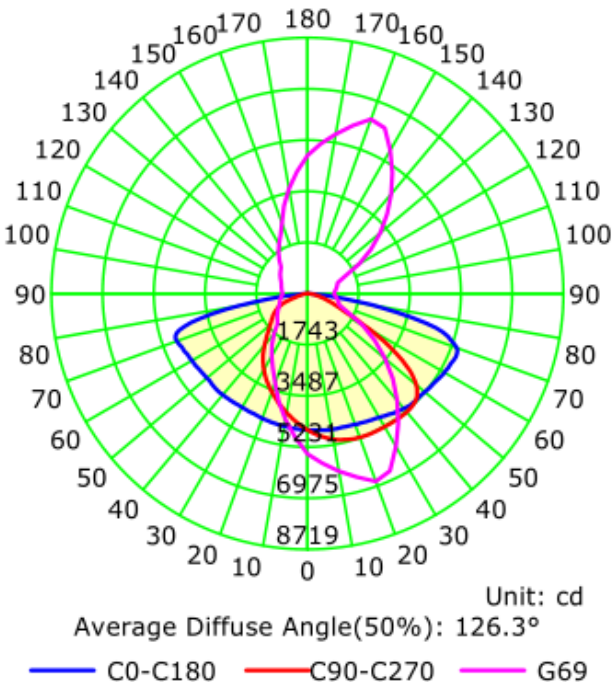

Unit: cd
Average Diffuse Angle(50%): 126.3°
C0-C180 C90-C270 G69

The Average Illuminance Effective Figure

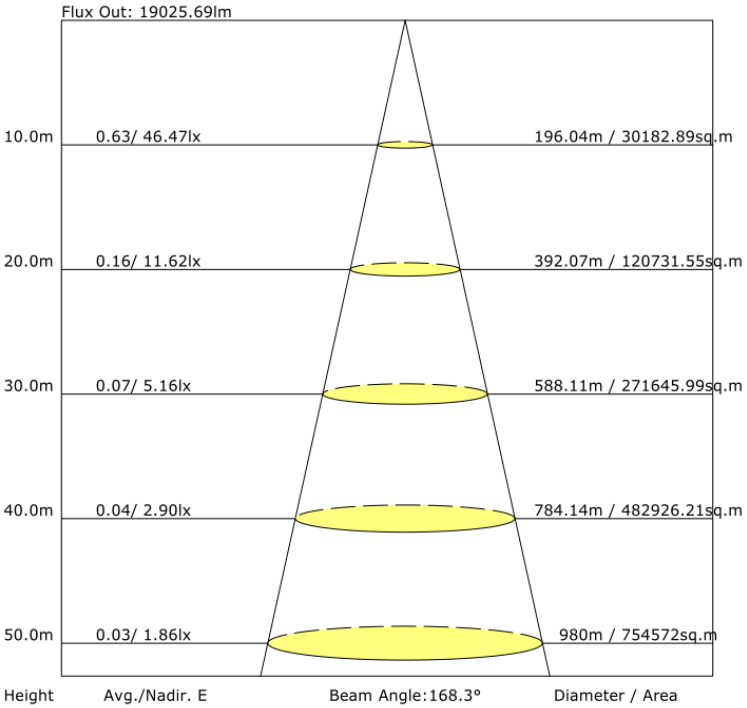

PACKAGE

Stent Type	Lamp Net Weight	Size	Qty / Carton	Gross Weight / Carton
AM	5.4KG	585*385*160 MM	1 PC	6.3KG
DM	5.9KG	585*385*160 MM	1 PC	6.8 KG
YM	5.1 KG	585*385*160 MM	1 PC	6KG
A&D	6.3KG	585*385*160 MM	1 PC	7.2 KG

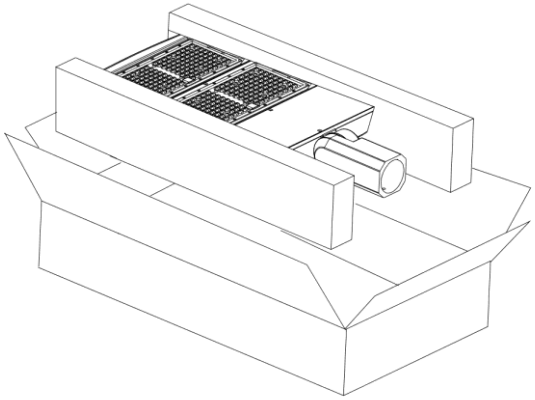

150 Watt NextGen II with Slip Fit

Arm Mount is 22 Inch / 564mm Long and Yoke Mount is 19 inch 484mm Long

NOTICE FOR USER

- Please turn off power before install or change assembly parts.
- The input voltage and lamps should be matched, after connecting the power line, Please make sure the wiring section is insulated.
- No-professionals, must not install and disassemble the lamps.

TROUBLE SHOOTINGS

Troubles	Check points
Flickering of the light	Turn off the power and turn on again in 3 minutes. If same phenomena occur, then call agencies.
Out of working	Please check the connection.

S29850

9WPLH/LED/830/DR/4P
9W LED PL 4-Pin; 3000K; 950 Lumens; G24q base; 50000 Average rated hours; 120 Deg. beam spread

S29850

Features
- Replaces 26, 32, and 42 watt CFLs
- Direct Replacement - for use with Electronic, Instant Start, Rapid Start, and Programmed Start ballasts with no rewiring required. Ballast required.
- Instant on to full brightness / no flickering
- Horizontal operation
- Up to 70% energy saving
- Long life - 50,000 hours
- 5 year warranty

*Ballast required (See Ballast Compatibility Chart)

Item Number	UPC	Watts	Fluorescent Equivalent	Lamp Shape	Base	Lamp Code	Dimmable/Non-Dimmable
S29850	045923298509	9	26, 32, and 42 watt CFL	PL	G24q	9WPLH/LED/830/DR/4P	Non-Dimmable

Finish	MOL In Inches	MOD In Inches	Initial Lumens	Average Rated Hours	Kelvin Temp	Color	CRI
Frost	6-5/8"	1-3/32"	950	50000	3000	Soft White	82

Beam Spread Deg	Operating Temperature	Package Type	CEC Status	DLC ID:	RoHS Compliant	UL or ETL Listed	UL Classification
120	-20C (-4F) to a maximum of +45C (+113F)	Box	Lawful for sale in California	PLJAGBSSPJZJ DLC Search	Yes	Yes	cULus Classified - Damp Location Rated

Warranty
5 Year Limited

[illegible] ECM [illegible] [illegible] [illegible] C[illegible]

Economic Summary

ECM[illegible]
E[illegible]
A[illegible] M[illegible] D[illegible]
[illegible]G[illegible]
E[illegible] C[illegible]
E[illegible] I[illegible] C[illegible]
[illegible]
M[illegible] C[illegible] M[illegible]

Existing Condition

[illegible]

Recommendation

[illegible]

[illegible]

F[illegible] M[illegible] C[illegible] M[illegible]

[illegible]

[illegible]

G[illegible]

[illegible]

[illegible]

[illegible]

C[illegible]

[illegible]

M[illegible]

[illegible]

A[illegible]

C[illegible]

E[illegible]

Space Type	Sensor Type	Estimated Qty
Conference Rooms/ Break Rooms	Ceiling Mounted Dual Technology	5
Offices	Wall Switch Dual Technology	33
Restrooms	Wall Switch Dual Technology	18
Kitchenettes	Wall Switch Dual Technology	1

C[illegible] M[illegible]

[illegible]

[illegible] M[illegible]

[illegible]

C[illegible] A[illegible]

[illegible]

C[illegible]

D[illegible] [illegible] M[illegible]

F[illegible] B[illegible] D[illegible]

A[illegible]

C[illegible] C[illegible]

[illegible]AM[illegible]LE [illegible] D[illegible] C[illegible] [illegible]ECIFICA[illegible] [illegible]

General Specification

Commercial Grade

In-Wall Occupancy/Vacancy Sensor

Model #: MWOS

Description: This Multi-Technology Wall Switch Sensor combine advanced passive infrared (PIR) and ultrasonic technologies into one unit. The combined technologies helps eliminate false triggering even in difficult applications. Selectable operating modes allow the sensor to turn a load on, and hold it on as long as either or both technologies detect occupancy . After no movement is detected for the selected time delay, the lights switch off.
A "walk-through" mode can turn lights off after only 3 minutes, if no activity is detected after 30 seconds following an occupancy detection.

This sensor also contains a light level sensor. If adequate daylight is present, the sensor holds the load OFF until light levels drop, even if the area is occupied.

Features:

- Integrated PIR and Ultrasonic sensor technology to detect very fine motion and provide accurate motion sensing
- Allows to choose triggering when both technologies detect motion or when only PIR detects motion
- Less false trigger, fast ON/OFF; commercial grade sensor for closet, garage, hotels, meeting room, work places
- Adjustable timeout from 15 seconds to 30 minutes; Walk-Through mode: 3 minutes if no activity after first 30 seconds

Specifications:

Voltage 120/277VAC,50/60Hz
Load Requirments:
Incandescent.....800W-120VAC,50/60Hz
Fluorescent.....800VA-120VAC,1600VA-277VAC,50/60Hz
Resistive.....800W-120VAC,50/60Hz
Motor 1/4HP-120VAC,50/60Hz
Adjustment Time Delay..... 5Sec to 30Mins
Walk-Through Mode.....3 minutes if no activity after 30 sec.
Test Mode ..... 5 sec. at initial power up or DIP switch reset
PIR Adjustment.....High or Low (DIP switch)
Ultrasonic Adjustment ..... Minimum to Maximum (trimpot)
Light Level Adjustment.....100 Lux --daylight(trimpot)
Operation Temperature..... 32° F--131° F

Testing & Code Compliance

- UL LISTED

Installation & wiring

1. Make sure that the power has been turned OFF at the circuit breaker.
2. Connect lead wires as WIRING DIAGRAM (see Figure 1): Black lead to Line(Hot), Red lead to Load wire, White lead to Neutral wire, Green lead to Ground.

Wiring Diagram:

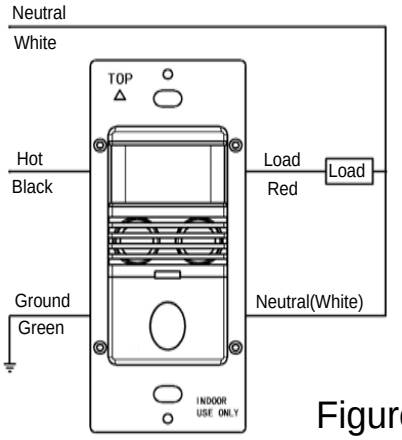

Figure 1

3. Mount device “TOP”up.
4. Gently position wires in wall box, attach sensor switch to the box.
5. Restore power at circuit breaker or fuse, wait *one* minute.
6. Remove the small cover plate.
7. Locate the adjustment trimpots on the control panel to perform test and adjustment.
8. Replace the small cover plate after testing and adjustment.

Coverage area

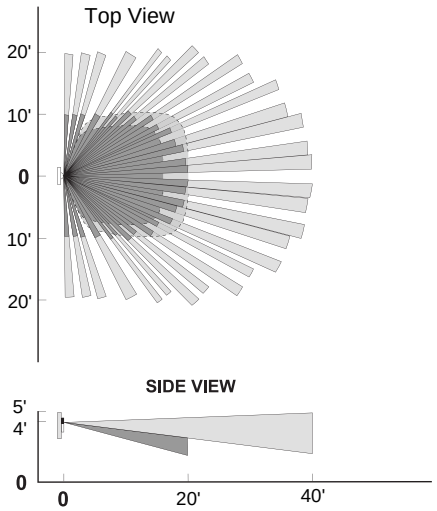

PIR Coverage: 1200 ft^2
Ultrasonic Coverage: 400 ft^2

Adjustment

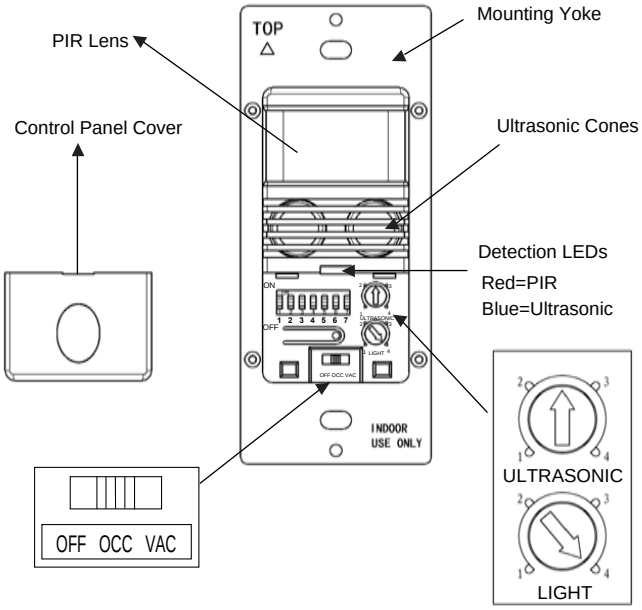

Band switch prescription.

Mode	Position	Description	React to the push-button
OFF	Left	Circuit is permanently opened. (switched off)	None
OCC	Center	Occupancy Mode: Automatic On, automatic Off after set time delay.	Manually toggles On / Off the load.
VAC	Right	Vacancy Mode: Manual On only, automatic Off after set time delay.	Manually toggles On/Off the load.

DIP Switch Setting

The MWOS has 7 DIP switches under the cover. They are used to set sensitivity, time delay, trigger mode, walk through mode feature settings.

Trigger Mode	Initial Trigger	Maintain Load Output	Re-trigger	2	3
Option 1	Both	Either	Either	↓	↓ ◀
Option 2	PIR	PIR	PIR	↓	↑
Option 3	US	US	US	↑	↓
Option 4	Both	Both	Both	↑	↑

Sensitivity	1
50%	↓
100%	↑ ◀

Walk Through	7
Disabled	↓ ◀
Enabled	↑

Time Delay	4	5	6
5 Sec/Test	↓	↓	↓ ◀
30 Seconds	↓	↓	↑
5 Minutes	↓	↑	↓
10 Minutes	↓	↑	↑
15 Minutes	↑	↓	↓
20 Minutes	↑	↓	↑
25 Minutes	↑	↑	↓
30 Minutes	↑	↑	↑

↓=OFF ↑=ON ◀=Factory Setting

Infrared Ceiling Mount Sensor

The LOS-CIR Series ceiling-mount passive infrared sensors can integrate into Lutron systems or function as stand-alone controls using a Lutron power pack. The sensor uses a small semiconductor heat detector that resides behind a multi-zone optical lens. The sensor's detector is sensitive to the heat emitted by the human body. In order to trigger the sensor, the source of heat must move from one range of detection to another. Non-moving hot objects will not cause the lights to turn on.

Features

- Intelligent, continually adapting passive infrared (PIR) sensor
- Passive infrared sensing
- Reliable motion detection with high error immunity
- Snap-locks to ceiling-mounted cover plate
- Non-Volatile Memory: settings saved in protected memory are not lost during power outages
- 450 to 1500 sq.ft. (42 to 140 m^2) coverage when mounted on an 8 - 12 ft. (2.4 - 3.7 m) ceiling
- Affords choice of turning lights off or dimming to a preset level in the unoccupied state when integrated with a Lutron system.

Models Available

Cat. No.	Color	Coverage	Field of View
LOS-CIR-450-WH	White	450 sq.ft. (42 m^2)	360°
LOS-CIR-1500-WH	White	1500 sq. ft. (140 m^2)	360°

Self-Adaptive Feature

The LOS-CIR Series ceiling-mount occupant sensors provides reliable detection with high error immunity. The internal microprocessor analyzes the information from the PIR technology and determines the optimum setting to use in order to properly cover the space.

Specifications

Timer Adjustment

- Automatic mode: Continually adapting sensor automatically adjusts settings to the space
- Manual mode: 8 to 30 minutes
- Test mode: 8 seconds

LED Lamp

- Red: infrared motion detected

Housing

- Rugged, high-impact, injection-molded plastic
- Color-coded leads 6 in. (15 cm)

Power

- Operating voltage: 20 - 24 V⎓, PELV (Class 2: USA) low-voltage
- Operating current: 33 mA nominal
- Control output: 20 - 24 V⎓ active high logic control signal with short-circuit protection, open collector when unoccupied
- UL and CUL listed

Operating Environment

- Temperature: 32 to 104 °F (0 to 40 °C)
- Relative humidity: less than 95%, non-condensing
- For indoor use only

Dimensions

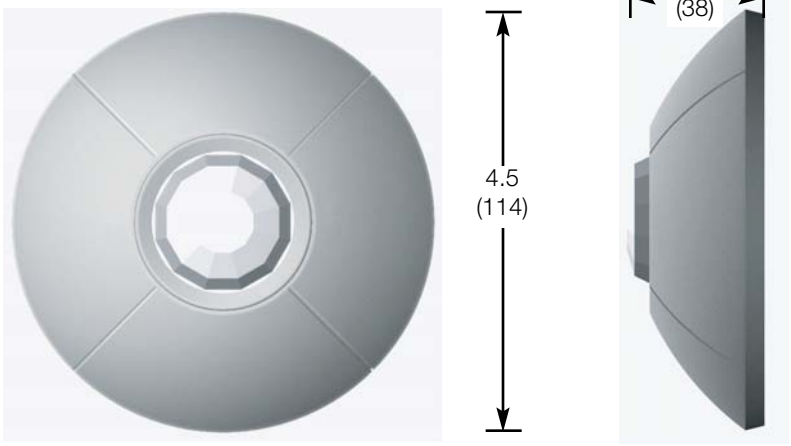

Front View

Side View

Measurements are in inches (mm)

Wiring

Note: Power pack may be required when interfaced to lighting control system; see below.

Single Sensor to System

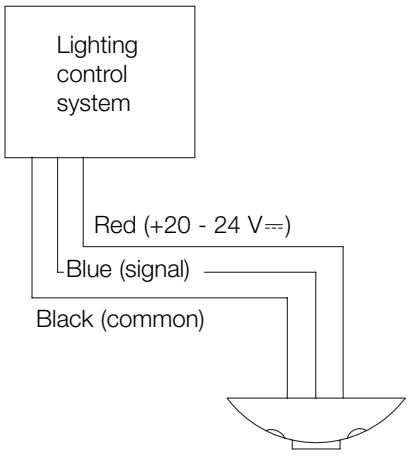

2 or More Sensors to System

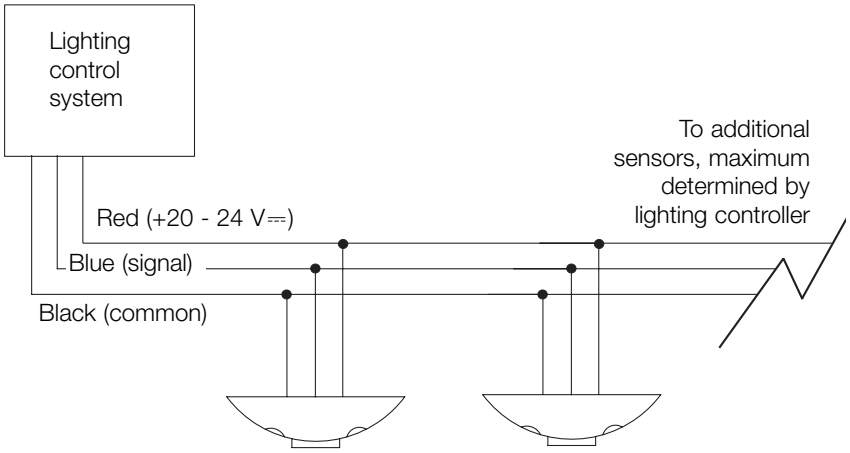

Power Supply Options

Lutron Lighting Control System	Power Pack Required?
Digital microWATT™	No
EcoSystem®	No
GRAFIK 5000 / 6000 / 7000	No, when used with seeTouch® wallstations with occupant sensor connections.
GRAFIK Eye® 3000 / 4000	Yes
HomeWorks®	Yes
LCP128™	No, when used with *seeTouch* wallstations with occupant sensor connections.
microWATT®	No
RadioRA®	Yes
RadioTouch®	No
Softswitch128®	No, when used with *seeTouch* wallstations with occupant sensor connections.

Wiring: Stand-Alone Control

1 to 3 Sensors with Power Pack

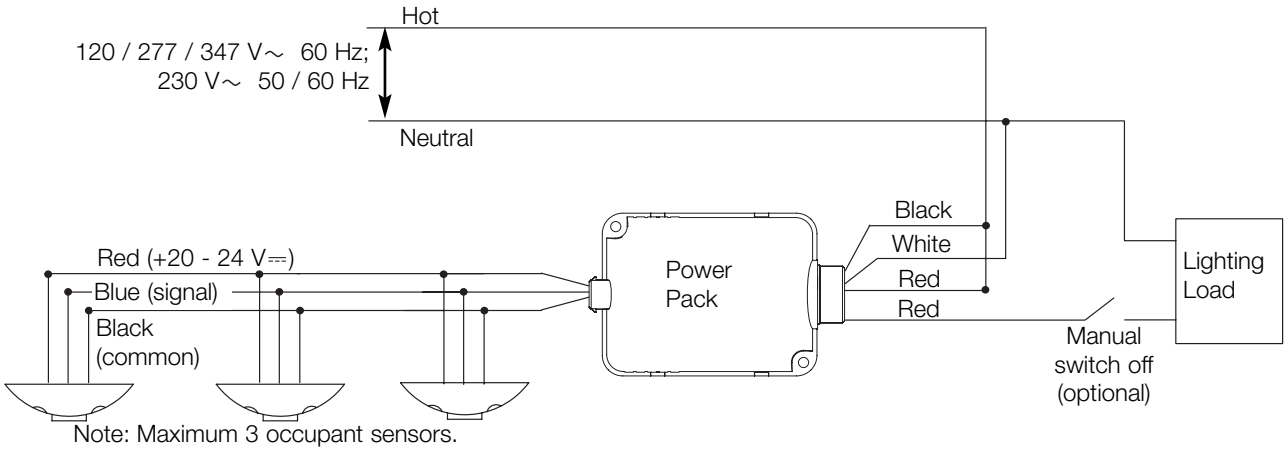

Note: Maximum 3 occupant sensors.

Switching Multiple Loads with Auxiliary Power Packs

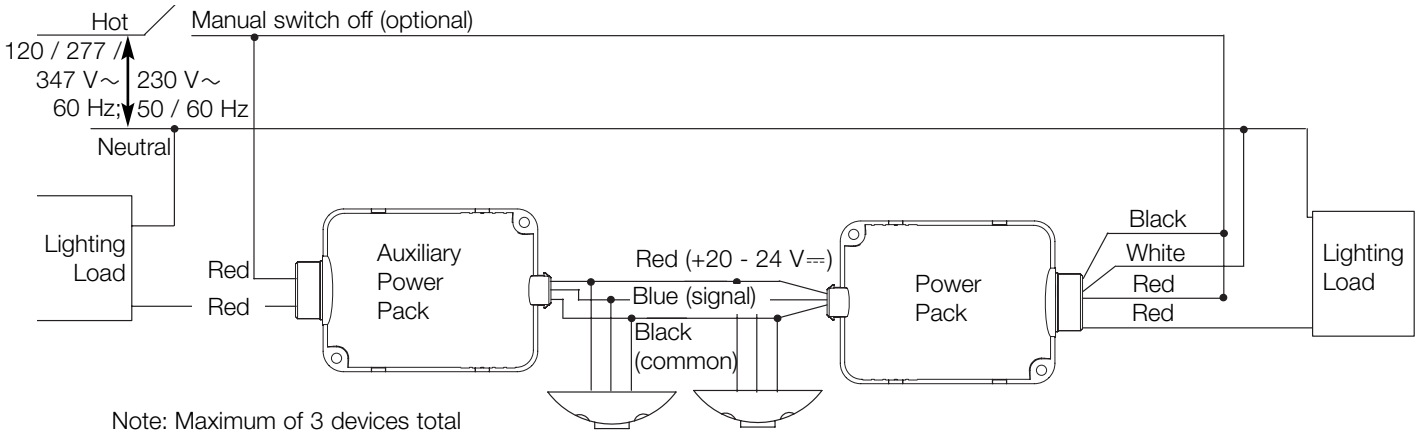

Note: Maximum of 3 devices total (occupant sensors and auxiliary power packs) can be connected to a power pack.

Installation

Sensor Placement

- The occupant sensor must have an unobstructed view of the room. Do not mount behind or near tall cabinets, shelves, indirect hanging fixtures, etc.
- Keep the occupant sensor away from air flow from ventilation outlets, windows, fans, etc.
- Closely follow the diagrams shown concerning major and minor motion coverage. The sensor can detect major motion (such as a person taking a half-step) at a greater distance than it can detect minor motion (such as writing or typing at a desk).
- May not detect occupancy with no significant difference between ambient and body temperatures.

Range Diagrams

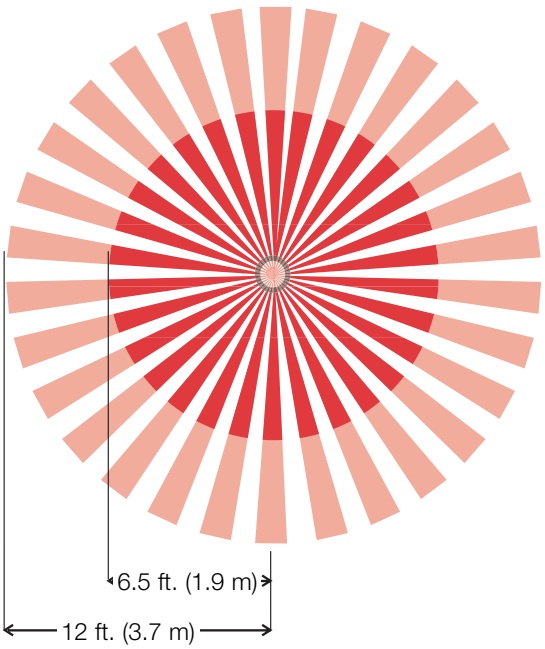

LOS-CIR-450

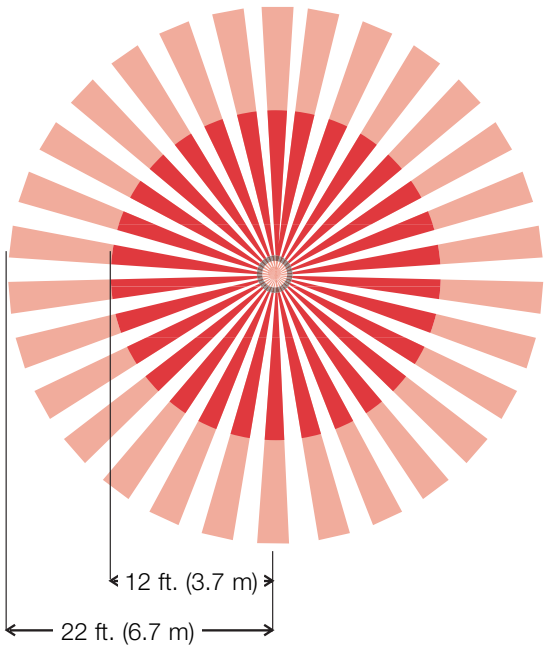

LOS-CIR-1500

Major motion detection

Minor motion detection

Installation

Mounting

Normal Mounting

Twist and lock threaded mounting post onto cover plate. Drill through ceiling tile with assembly, using cutter end of the threaded mounting post. Secure with washer and nut.

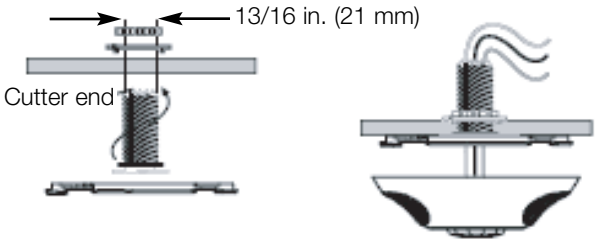

Mounting to Non-Standard Ceiling or Fixture

Mount twist-lock cover plate using mounting screws, nuts, and washers (included). Drill/punch wire routing hole through ceiling tile at center of cover plate.

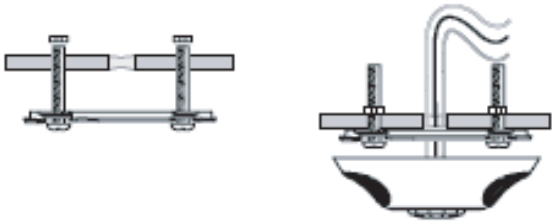

Wire Lengths

# Sensors	1	2	3	1	2	1
# Aux. PP	0	0	0	1	1	2
22 AWG	750 ft.	375 ft.	250 ft.	375 ft.	250 ft.	250 ft.
0.5 mm^2	365 m	180 m	120 m	90 m	120 m	120 m
20 AWG	1200 ft.	600 ft.	400 ft.	600 ft.	400 ft.	400 ft.
0.75 mm^2	730 m	365 m	240 m	365 m	240 m	365 m
18 AWG	2400 ft.	1200 ft.	800 ft.	1200 ft.	800 ft.	800 ft.

Mounting Plate Dimensions

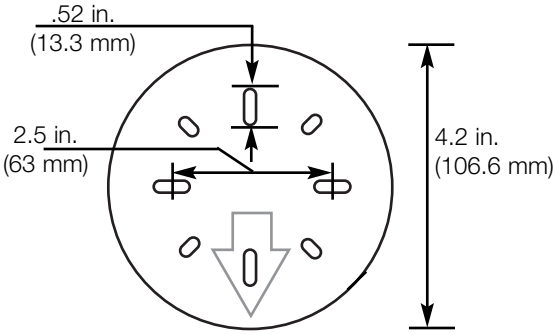

Using the Infrared Mask

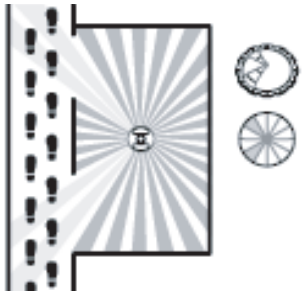

Center Ceiling Mount
(Mask blocks sensor seeing out doorway into hall)

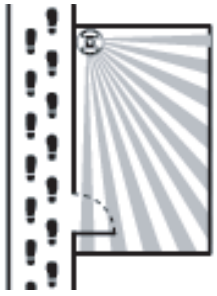

Corner Ceiling Mount
(No mask needed)

Typical Mask Patterns

Conference Room Mask | 180° Mask | Full Mask

Rectangular Areas | Over the Door | Specific Areas You Wish to Mask

Sensor Adjustments

Override Settings

A		Off (Default)	On
Auto/Manual	1	Automatic (Normal)	Manual on/off (Override)
Threshold	2	Auto Threshold Adjustment	High Sensitivity (Low turn-on threshold)
LED Motion Indicator	3	Lights indicate motion	Disable LED Indicator
Reset Learned Settings	4	Retain Settings (Normal)	Erase all learned settings, Restart Learning (Toggle On)

B		Off	On
Strong Airflow Compensation	1	Disable Compensation (Normal)	Enable Compensation
Over Doorway Installation	2	No (Normal)	Yes (Use increased turn-on threshold)
Timer Adjust	3	Adjust Timer Automatically	Use Manual Setting (No adjustment)
Auto Sensitivity	4	Adjust Sensitivity Automatically	Adjust Sensitivity Manually

Timer Test Mode

1. Remove the retainer cover.
2. Rotate the black timer adjustment knob to about midway (12 o'clock).
3. Return setting to minimum setting (full CCW).

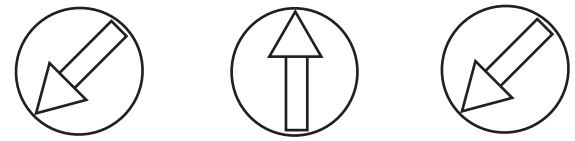

Factory Settings 12 o'clock Full CCW

Note: The timer will remain in the 8-second test mode for 1 hour, then automatically reset to 8 minutes.

4. To manually take the timer out of the 8-second test mode, turn the timer adjustment approximately 1/16" clockwise to make the setting slightly above minimum (just above the 8-minute setting).

Factory Settings

Red: Infrared sensitivity 75% default

Black: Timer 8 min.

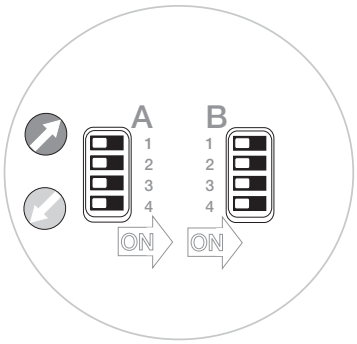

ECM [redacted]

Economic Summary

ECM [redacted]	
E[redacted]	[redacted]
A[redacted] M[redacted] D[redacted]	[redacted]
[redacted] G[redacted]	[redacted]
E[redacted] C[redacted]	[redacted]
E[redacted] I[redacted] C[redacted]	[redacted]
[redacted]	[redacted]
GHG E[redacted] M[redacted]	[redacted]
C[redacted] GHG [redacted] M[redacted]	[redacted]

Existing Condition

[redacted]

H AC [redacted]

[redacted]

F[redacted] A[redacted]

[redacted]

Recommendation

[illegible]

[illegible]

[illegible]

C[illegible] E[illegible] F[illegible] [illegible] K

G[illegible]

[illegible] [illegible] [illegible] [

ECM [illegible]

Economic Summary

ECM[illegible]
E[illegible]
A[illegible] M[illegible] D[illegible]
E[illegible] C[illegible]
E[illegible] I[illegible] C[illegible]
[illegible]
E[illegible] I[illegible]
[illegible] C[illegible]
[illegible] I[illegible]
M[illegible] C[illegible] M[illegible]

Existing Condition

[illegible] H[illegible] B[illegible] [illegible]

[illegible] A[illegible] F[illegible]

Recommendation

[illegible] EC[illegible] B[illegible]

[illegible]

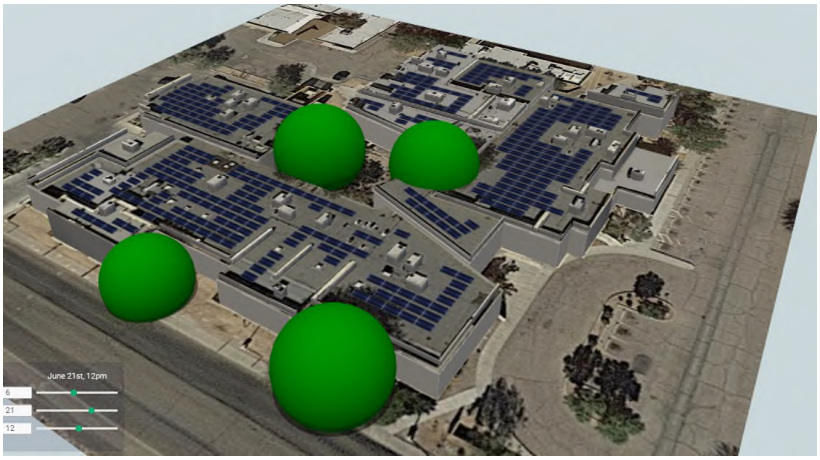

F[illegible] L[illegible]

A [illegible]

[illegible] A[illegible] F[illegible]

[illegible]

[illegible]

[illegible]

- A[illegible]
- [illegible]
- [illegible]

[illegible]

[illegible]

[illegible]

A[illegible] C[illegible] M[illegible]

[illegible] C[illegible] [illegible] [illegible] [

[illegible] D[illegible] [illegible] [illegible] [

[illegible]

SUNNY BOY
3.0-US / 3.8-US / 5.0-US / 6.0-US / 7.0-US / 7.7-US

SB3.0-1SP-US-40 / SB3.8-1SP-US-40 / SB5.0-1SP-US-40 / SB6.0-1SP-US-40
SB7.0-1SP-US-40 / SB7.7-1SP-US-40 / SB3.0-1TP-US-40 / SB3.8-1TP-US-40
SB5.0-1TP-US-40 / SB6.0-1TP-US-40 / SB7.0-1TP-US-40 / SB7.7-1TP-US-40

Value-Added Improvements

- Superior integration with SMA's MLPE Power+ Solution
- World's first Secure Power Supply* now offers up to 2,000 W
- Full grid management capabilities ensure a utility-compliant solution for any market

Reduced Labor

- New Installation Assistant with direct access via smartphone minimizes time in the field
- Advanced communication interface with fewer components creates 50% faster setup and commissioning

Unmatched Flexibility

- SMA's proprietary OptiTrac™ Global Peak technology mitigates shade with ease
- Multiple independent MPPTs accommodate hundreds of stringing possibilities

Trouble-Free Servicing

- Two-part enclosure concept allows for simple, expedited servicing
- Equipped with SMA Smart Connected, a proactive service solution that is integrated into Sunny Portal

SUNNY BOY 3.0-US / 3.8-US / 5.0-US / 6.0-US / 7.0-US / 7.7-US

Reduce costs across your entire residential business model

The residential PV market is changing rapidly. Your bottom line matters more than ever—so we've designed a superior residential solution to help you decrease costs at every stage of your business operations. The Sunny Boy 3.0-US/3.8-US/5.0-US/6.0-US/7.0-US/7.7-US join the SMA lineup of field-proven solar technology backed by the world's #1 service team, along with a wealth of improvements. Simple design, improved stocking and ordering, value-driven sales support and streamlined installation are just some of the ways that SMA helps your business operate more efficiently. And, Sunny Boy's superior integration with the innovative Power+ Solution means installers have even more flexibility in addressing their toughest challenges. Finally, SMA Smart Connected will automatically detect errors and initiate the repair and replacement process so that installers can reduce service calls and save time and money.

Technical data	Sunny Boy 3.0-US		Sunny Boy 3.8-US		Sunny Boy 5.0-US	
	208 V	240 V	208 V	240 V	208 V	240 V
Input (DC)						
Max. PV power	4260 Wp		5396 Wp		7100 Wp	
Max. DC voltage	600 V					
Rated MPP voltage range	155 - 480 V		195 - 480 V		220 – 480 V	
MPPT operating voltage range	100 – 550 V					
Min. DC voltage / start voltage	100 V / 125 V					
Max. operating input current per MPPT	10 A					
Max. short circuit current per MPPT	18 A					
Number of MPPT tracker / string per MPPT tracker	2/1				3 / 1	
Output (AC)						
AC nominal power	3000 W	3000 W	3330 W	3800 W	5000 W	5000 W
Max. AC apparent power	3000 VA	3000 VA	3330 VA	3800 VA	5000 VA	5000 VA
Nominal voltage / adjustable	208 V / ●	240 V / ●	208 V / ●	240 V / ●	208 V / ●	240 V / ●
AC voltage range	183 – 229 V	211 – 264 V	183 – 229 V	211 – 264 V	183 – 229 V	211 – 264 V
AC grid frequency	60 Hz / 50 Hz					
Max. output current	14.5 A	12.5 A	16.0 A	16.0 A	24.0 A	24.0 A
Power factor (cos φ)	1					
Output phases / line connections	1 / 2					
Harmonics	< 4 %					
Efficiency						
Max. efficiency	97.2 %	97.6 %	97.2 %	97.5 %	97.2 %	97.5 %
CEC efficiency	96 %	96.5 %	96.5 %	96.5 %	96.5 %	97 %
Protection devices						
DC disconnect device / DC reverse polarity protection	● / ●					
Ground fault monitoring / Grid monitoring	●					
AC short circuit protection	●					
All-pole sensitive residual current monitoring unit (RCMU)	●					
Arc fault circuit interrupter (AFCI)	●					
Protection class / overvoltage category	I / IV					
General data						
Dimensions (W / H / D) in mm (in)	535 x 730 x 198 (21.1 x 28.5 x 7.8)					
Packaging dimensions (W / H / D) in mm (in)	600 x 800 x 300 (23.6 x 31.5 x 11.8)					
Weight / packaging weight	26 kg (57 lb) / 30 kg (66 lb)					
Temperature range: operating / non-operating	-25°C ...+60°C / -40°C ...+60°C					
Environmental protection rating	NEMA 3R					
Noise emission (typical)	39 dB(A)					
Internal power consumption at night	< 5 W					
Topology / Cooling concept	Transformerless / Convection					
Features						
Ethernet ports	2					
Secure Power Supply	●*					
Display (2 x 16 characters)	●					
WLAN / Sensor module / External WLAN antenna	● / ○ / ○					
Cellular (4G / 3G) / Revenue Grade Meter	○ / ○**					
Warranty: 10 / 15 / 20 years	●/○/○					
Certificates and approvals	UL 1741, UL 1741 SA incl. Rule 21 RSD, UL 1998, UL 1699B, IEEE1547, FCC Part 15 (Class A & B), CAN/CSA V22.2 107.1-1, HECO SRD-UL-1741-SA-V1.1					
● Standard features ○ Optional features – Not available Data at nominal conditions						
NOTE: US inverters ship with gray lids. * Not compatible with the Power+ Solution Shutdown functionality **Standard in SBX.X-1TP-US-40						
Type designation	SB3.0-1SP-US-40 / SB3.0-1TP-US-40		SB3.8-1SP-US-40 / SB3.8-1TP-US-40		SB5.0-1SP-US-40 / SB5.0-1TP-US-40	

Accessories

Sensor module
MD.SEN-US-40

External WLAN antenna
EXTANT-US-40

SMA Rooftop
Communication Kit
ROOFCOMMKIT-P2-US

Revenue Grade
Meter Kit
RGM05KIT-US-10

Cellular Modem Kit
CELLMODKIT-US-10

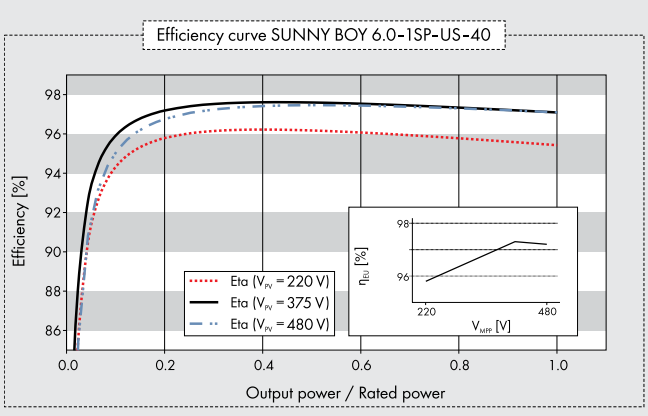

Technical data	Sunny Boy 6.0-US		Sunny Boy 7.0-US		Sunny Boy 7.7-US	
	208 V	240 V	208 V	240 V	208 V	240 V
Input (DC)						
Max. PV power	8520 Wp		9940 Wp		10905 Wp	
Max. DC Voltage	600 V					
Rated MPP Voltage range	220 – 480 V		245 - 480 V		270 - 480 V	
MPPT operating voltage range	100 – 550 V					
Min. DC voltage / start voltage	100 V / 125 V					
Max. operating input current per MPPT	10 A					
Max. short circuit current per MPPT	18 A					
Number of MPPT tracker / string per MPPT tracker	3 / 1					
Output (AC)						
AC nominal power	5200 W	6000 W	6660 W	7000 W	6660 W	7680 W
Max. AC apparent power	5200 VA	6000 VA	6660 VA	7000 VA	6660 VA	7680 VA
Nominal voltage / adjustable	208 V / ●	240 V / ●	208 V / ●	240 V / ●	208 V / ●	240 V / ●
AC voltage range	183 – 229 V	211 – 264 V	183 – 229 V	211 – 264 V	183 – 229 V	211 – 264 V
AC grid frequency	60 Hz / 50 Hz					
Max. output current	25.0 A	25.0 A	32.0 A	29.2 A	32.0 A	32.0 A
Power factor (cos φ)	1					
Output phases / line connections	1 / 2					
Harmonics	< 4 %					
Efficiency						
Max. efficiency	97.2 %	97.6 %	97.1 %	97.5 %	97.1 %	97.5 %
CEC efficiency	96.5 %	97 %	96.5 %	97 %	96.5 %	97 %
Protection devices						
DC disconnect device / DC reverse polarity protection	● / ●					
Ground fault monitoring / Grid monitoring	●					
AC short circuit protection	●					
All-pole sensitive residual current monitoring unit (RCMU)	●					
Arc fault circuit interrupter (AFCI)	●					
Protection class / overvoltage category	I / IV					
General data						
Dimensions (W / H / D) in mm (in)	535 x 730 x 198 (21.1 x 28.5 x 7.8)					
Packaging Dimensions (W / H / D) in mm (in)	600 x 800 x 300 (23.6 x 31.5 x 11.8)					
Weight / packaging weight	26 kg (57 lb) / 30 kg (66 lb)					
Temperature range: operating / non-operating	-25°C ...+60°C / -40°C ...+60°C					
Environmental protection rating	NEMA 3R					
Noise emission (typical)	39 dB(A)		45 dB(A)			
Internal power consumption at night	< 5 W					
Topology / Cooling concept	Transformerless / Convection		Transformerless / Fan			
Features						
Ethernet ports	2					
Secure Power Supply	●*					
Display (2 x 16 characters)	●					
WLAN / Sensor module / External WLAN antenna	● / ○ / ○					
Cellular (4G / 3G) / Revenue Grade Meter	○ / ○**					
Warranty: 10 / 15 / 20 years	●/○/○					
Certificates and approvals	UL 1741, UL 1741 SA incl. Rule 21 RSD, UL 1998, UL 1699B, IEEE1547, FCC Part 15 (Class A & B), CAN/CSA V22.2 107.1-1, HECO SRD-UL-1741-SA-V1.1					
● Standard features ○ Optional features – Not available Data at nominal conditions NOTE: US inverters ship with gray lids. * Not compatible with the Power+ Solution Shutdown functionality						
NOTE: US inverters ship with gray lids. * Not compatible with the Power+ Solution Shutdown functionality **Standard in SBX.X-1TP-US-40						
Type designation	SB6.0-1SP-US-40 / SB6.0-1TP-US-40		SB7.0-1SP-US-40 / SB7.0-1TP-US-40		SB7.7-1SP-US-40 / SB7.7-1TP-US-40	

POWER+ SOLUTION

The SMA Power+ Solution combines legendary SMA inverter performance and intelligent DC module-level electronics in one cost-effective, comprehensive package. This means that you can achieve maximum solar power production for your customers while also realizing significant installation savings.

NEW! Advanced communication interface allows for 50% faster setup and commissioning thanks to reduced components and a simplified process.

Visit www.SMA-America.com for more information.

SIMPLE, FLEXIBLE DESIGN

Speed the completion of customer proposals and maximize the efficiency of your design team with the Sunny Boy-US series, which provides a new level of flexibility in system design by offering:

» Hundreds of stringing configurations and multiple independent MPPTs

» SMA's proprietary OptiTrac™ Global Peak shade mitigation technology

» Diverse application options including on- and off-grid compatibility

VALUE-DRIVEN SALES ENABLEMENT

SMA wants to enable your sales team by arming them with an abundance of feature/benefit support. Show your customers the value of the Sunny Boy-US series by utilizing:

» Secure Power Supply, now with 2,000 W of opportunity power in the event of a grid outage, as an increased value-add or upsell opportunity

» SMA's 35 year history and status as the #1 global inverter manufacturer instills homeowners with peace of mind and the long-term security they demand from a PV investment

» An economical solution for shade mitigation and the challenges of complex roofs

IMPROVED STOCKING AND ORDERING

Ensure that your back office business operations run smoothly and succinctly while mitigating potential errors. The Sunny Boy-US series can help achieve cost savings in these areas by providing:

» An integrated DC disconnect that simplifies equipment stocking and allows for a single inverter part number

» All communications integrated into the inverter, eliminating the need to order additional equipment

STREAMLINED INSTALLATION AND COMMISSIONING

Expedite your operations in the field by taking advantage of the new Sunny Boy's installer-friendly feature set including:

» Direct access via smartphone and utilization of SMA's Installation Assistant, which minimizes time/labor spent in the field and speeds the path to commissioning

» Simple commissioning and monitoring setup in a single online portal

» New! Advanced communication interface with fewer components allows for 50% faster commissioning

SUPERIOR SERVICE

SMA understands the factors that contribute to lifetime PV ownership cost, that's why the Sunny Boy-US series was designed for maximum reliability and backstopped by an unmatched service offering. Benefit from:

» SMA Smart Connected, a proactive service solution integrated into Sunny Portal that automatically detects errors and initiates the repair and replacement process

» The #1 service team in the PV industry, as recognized by IMS research, with experience servicing an installed base of more than 55 GW

SB3.0-7-US-DUS184327 SMA and Sunny Boy are registered trademarks of SMA Solar Technology AG. Printed on FSC-certified paper. All products and services described as well as technical data are subject to change, even for reasons of country-specific deviations, at any time without notice. SMA assumes no liability for errors or omissions. For current information, see www.SMA-Solar.com.

LG
Life's Good

LG PRODUCT WARRANTY
25 YEAR
15 YEARS LONGER THAN INDUSTRY STANDARD OF 10 YEARS

LG NeON® 2

LG400/405N2W-V5

THE 72 CELL POWER HOUSE

UP TO 19.5% MODULE EFFICIENCY

Awards Received By LG Solar™

EUPD RESEARCH TOP BRAND PV MODULES AUSTRALIA 2019
EUPD RESEARCH TOP BRAND PV MODULES AUSTRALIA 2018
EUPD RESEARCH TOP BRAND PV MODULES AUSTRALIA 2017
EUPD RESEARCH TOP BRAND PV MODULES AUSTRALIA 2016
inter solar award 2016 WINNER
inter solar award 2015 WINNER
inter solar award 2013 WINNER

THE NeON® 2 72 CELL - 405W - THE PANEL OF THE FUTURE AVAILABLE TODAY

The new LG NeON® 2 72 cell has seen many improvements, from longer warranties and higher efficiency to more busbars. This panel is ideal for commercial systems or solar farms seeking an efficient use of space and a high quality panel with great output efficiency.

The new NeON® 2 with 72 cells adopts the award winning CELLO Technology replacing 3 busbars in each cell with 12 thin wires to enhance power output. This technology sets a new standard for innovation and was recognised with the 2015 Photovoltaic Innovation Award at the Intersolar Industry Event in Germany. LG also won the 2016 Intersolar award for our new NeON® Bifacial range.

More Power per Square Metre

LG NeON® 2's 405W are a similar physical size to many conventional 320W 72 cell panels. This means with the LG NeON® 2 405W you get 26% more electricity per square metre than a 320W panel. So you can install more kW of solar on your roof with the LG NeON® 2.

25 Years Product Warranty (Parts & Labour)

LG has extended the product warranty of the LG NeON® 2 by an additional 15 years from industry average 10 to 25 years. This includes coverage for labour and transport.

Improved High Temperature Performance

Solar panels slowly lose ability to generate power as they get hotter. LG NeON® 2, has an improved temperature co-efficient of -0.36%/°C to our previous model and to the majority of competitor models which means in high temperatures LG NeON® 2 panels will deliver higher output.

Improved 25 Year Performance Warranty

The initial degradation of cells has been improved from -3% to -2%, in the 1st year and the annual rate of degradation has fallen from -0.7%/year to -0.35%/ year thereafter. This brings an 89.6% warranted output at 25 years, compared to 80.2% for many competing panels.

Made in Korea

www.lgenergy.com.au

LG NeON® 2 - 72 Cell

ABOUT LG SOLAR

LG Electronics embarked on a solar energy research programme in 1985, using our vast experience in semi-conductors, chemistry and electronics. LG Solar modules are now available in 32 countries. In 2013, 2015 and 2016 the LG NeON® range won the acclaimed Intersolar Award in Germany, which demonstrates LG Solar's lead in innovation and commitment to the renewable energy industry. Additionally, LG Solar™ won the Australian Top Brand award in 2016, 2017 and 2018.

With over 200 lesser known brand panels selling in Australia, LG solar panels offer a peace of mind solution, as they are backed by an established global brand.

KEY FEATURES

Proven Field Performance

LG has been involved in a number of comparison tests of the LG panels against many other brand panels. LG NeON® models are consistently among the best performing in these tests.

Additional Certification

LG NeON® 2 panels have received additional certification including for, Salt Mist Corrosion to maximum severity 6. Ammonia Resistance certification and PID Resistance Tests.

Strict Quality Control Reliable for the Future

The quality control of LG world-class production processes is monitored and improved to Six Sigma quality control standards, which includes 500+ monitoring points to effectively maintain and improve our uncompromising standards.

Multi Anti-reflective Coatings Increase Output

LG Solar™ is using an anti-reflective coating on the panels glass as well as on the cell surface to ensure more light is absorbed in the panel and not reflected. More absorbed light means more electricity generation.

Installation Time Savings

This NeON® 2 - 72 cell panel can reduce installation time for commercial systems, as there are less panels required eg. to install a 3.2 MW system one would need 8,000 LG400W instead of 10,000 of a 320W – 72 cell panel. There will also be significant savings in design, transport, labour, rails and cabling and 20% less space required.

"CELLO" Technology Increases Power

"CELLO" Multi wire busbar cell technology lowers electrical resistance and increases panel efficiency, giving more power per panel and provides a more uniform look to the panel.

Low LID

The N-type doping of the NeON® cells results in extremely low Light Induced Degradation (LID) when compared with the standard P-type cells. This means more electricity generation over the life of the panel as the panel degrades less.

Extensive Testing Programme

LG solar panels are tested between 2 to 3 times the International Standards at our in-house testing laboratories, ensuring a very robust and longer lasting solar module.

Double-Sided Cell Structure

In conventional panels the cells produce energy from the front only. The NeON® Cell produces energy from both the front as well as the back of the cell. This innovative technology allows the absorption of light from behind the panel which raises the panel's efficiency and electricity output.

Positive Tolerance (0/+3%)

If we sell you a 400 Watt panel then the flash test of this panel will show somewhere between 400W and 412.1W. Some competitor panels have -/+ tolerance, so you could get a flash test result below the rated Watt, meaning you pay for Watts you never get.

Excellent low light performance

LG NeON 2 panels will give better performance under low light, such as early morning or late afternoon compared to many competing panels.

Automated Production in South Korea

All LG solar panels are manufactured in a custom designed and fully automated production line by LG in Gumi, South Korea ensuring extremely low tolerances. This means great quality and build consistency between panels.

LG NeON® 2 72 cell– INNOVATIVE, CLEVER, HIGH EFFICIENT

LG NeON® 2 72 cell solar modules now offer even more performance. Featuring LG's 12 wire busbar CELLO Technology for improved performance and reliability, it can also withstand a static front panel load of 5,400 pascals. LG has extended its product warranty from 10 to 25 years and improved its linear performance guarantee to at least 89.6% of nominal output after 25 years.

LOCAL WARRANTY, GLOBAL STRENGTH

LG Solar™ is part of LG Electronics Inc., a global and financially strong company, with over 50 years of experience in technology.

Good to know: LG Electronics Australia Pty Ltd is the warrantor in Australia and NZ for your solar modules. So LG support, via offices in every Australian mainland state and NZ and through our 70 strong, Australia wide dealer network, is only a phone call away.

The Warrantor's 2017 Global Sales in Billions of US Dollars

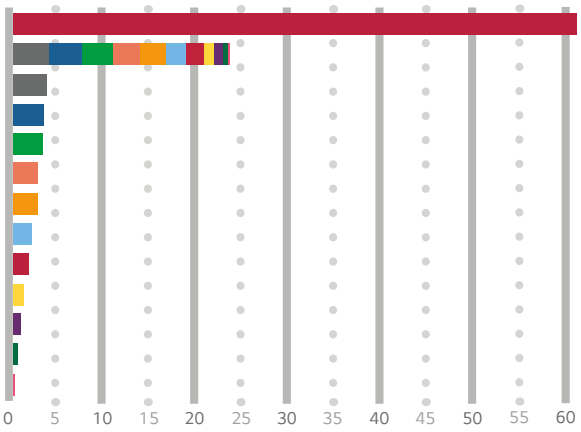

LG Electronics	$61.4bn
All below combined	$23.7bn
Jinko Solar*	$3.9bn
Trina Solar*	$3.5bn
Canadian Solar*	$3.4bn
First Solar*	$2.9bn
JA Solar*	$2.9bn
Hanwha Q Cells*	$2.2bn
Sunpower*	$1.9bn
Yingli*	$1.2bn
Suntech*	$0.9bn
REC Solar*	$0.6bn
Winaico/Win Win Precision Tech*	$0.15bn

*2017 Annual Financial Statements.

HIGHER OUTPUT, HIGHER YIELD

The NeON® Cell produces energy from both the front and the back of the cell. This innovative approach allows the absorption of light from the back of the cell which raises the panel's efficiency and power output. Standard panels only absorb light from the front.

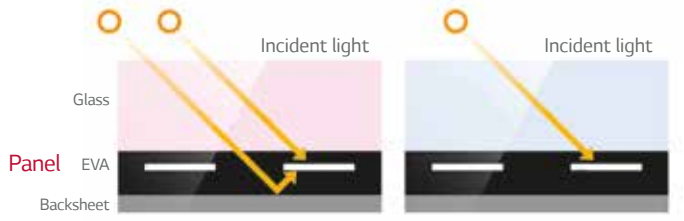

LG NeON® 2 module | Standard module

EXCELLENT QUALITY, THOROUGHLY TESTED

You can rely on LG. We test our products with at least double the intensity specified in the IEC standard. (International Quality Solar Standard).

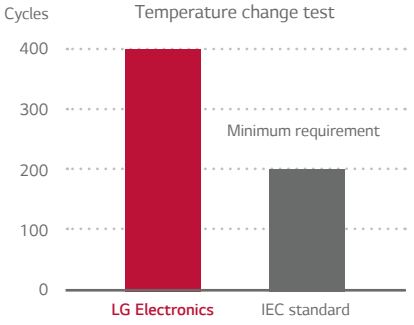

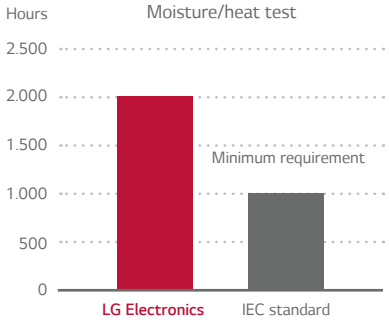

Awards Received By LG Solar™

Our panel range have won a string of International Awards.

GREAT WARRANTY

If you buy an LG panel and should there be a warranty issue you will deal with LG Electronics Australia/NZ. You will not have to worry if the importer is still in operation or the manufacturer is located overseas. We are only one phone call away. LG Electronics Australia/NZ backs your product. That's peace of mind. Contact us on solar.sales@lge.com.au or ph 61-2-88054038.

LG offers a 15 year longer product warranty for parts and labour than many competitors 10 years to an impressive 25 years.

10yrs +15yrs

LG NeON® 2 - 72 Cell

Mechanical Properties

Cells	6 x 12
Cell Vendor	LG
Cell Type	Monocrystalline / N-type
Cell Dimensions	161.7 x 161.7 mm
# of Busbar	12 (Multi Wire Busbar)
Dimensions (L x W x H)	2024 x 1024 x 40 mm
Front Load	5400 Pa
Rear Load	3000 Pa
Weight	20.3 kg
Connector Type	Genuine MC4, IP68 (Male: PV-KST4) (Female: PV-KBT4)
Junction Box	IP68 with 3 bypass diodes
Length of Cables	2 x 1200 mm
Front cover	High transmission tempered glass
Frame	Anodised aluminum

Certifications and Warranty

Certifications	ISO 9001, ISO 14001, ISO 50001
	IEC 61215-1/-1-1/2:2016, IEC 61730-1/-2:2016, UL1703
	OHSAS 1001, PV CYCLE
	IEC 61701:2012 Severity 6 (Salt Mist Corrosion Test)
	IEC 62716:2013 (Ammonia Test)
Module Fire Rating	Class C (UL 790, ULC/ORD C 1703)
Product Warranty	25 Years
Output Warranty of Pmax (Measurement Tolerance ± 3%)	Linear Warranty[1]

[1] 1) 1st year: 98%, 2) After 1st year: 0.35% annual degradation, 3) 89.6% for 25 years

Temperature Characteristics

NMOT	42 ± 3 °C
Pmax	-0.36 %/°C
Voc	-0.26 %/°C
Isc	0.02 %/°C

Characteristic Curves

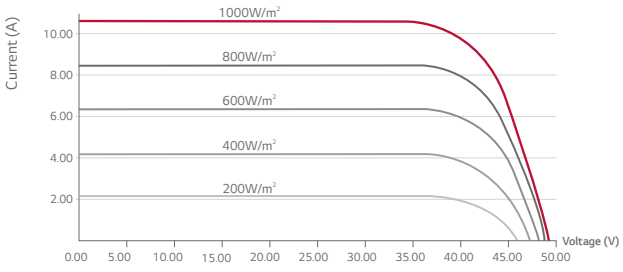

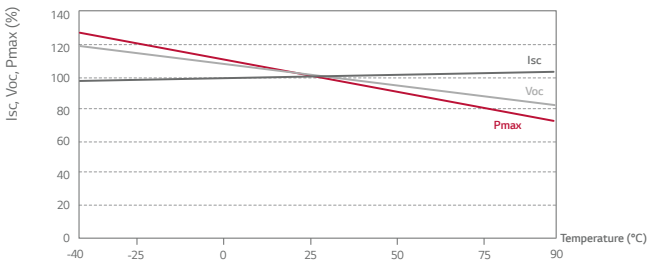

Electrical Properties (STC[2])

Module Type	400 W	405 W
Maximum Power Pmax (W)	400	405
MPP Voltage Vmpp (V)	40.6	41.0
MPP Current Impp (A)	9.86	9.89
Open Circuit Voltage Voc (V)	49.3	49.4
Short Circuit Current Isc (A)	10.47	10.51
Module Efficiency (%)	19.3	19.5
Operating Temperature (°C)	-40 ~ +90	
Maximum System Voltage (V)	1000 (IEC) / 1500 (UL)	
Maximum Series Fuse Rating (A)	20	
Power Tolerance (%)	0 ~ +3	

[2] STC (Standard Test Condition): Irradiance 1000 W/m², Module Temperature 25 °C, AM 1.5.
The nameplate power output is measured and determined by LG Electronics at its sole and absolute discretion.

Electrical Properties (NMOT[3])

Module Type	400 W	405 W
Maximum Power Pmax (W)	300	304
MPP Voltage Vmpp (V)	38.0	38.4
MPP Current Impp (A)	7.88	7.91
Open Circuit Voltage Voc (V)	46.5	46.6
Short Circuit Current Isc (A)	8.40	8.44

[3] NMOT (Nominal Module Operating Temperature): Irradiance 800 W/m², ambient temperature 20 °C, wind speed 1 m/s, Spectrum AM 1.5.

Dimensions (mm)

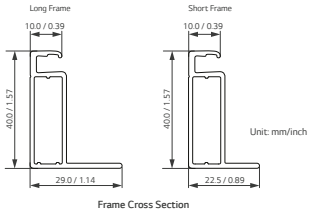

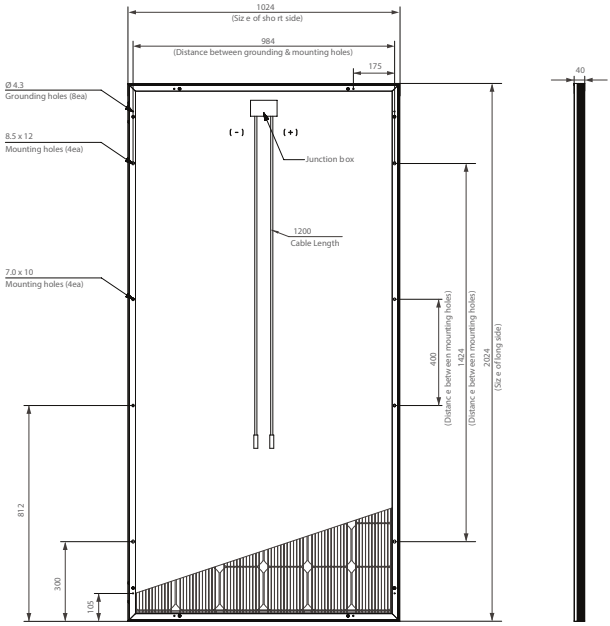

* The distance between the center of the mounting/grounding holes.

LG Life's Good

LG Electronics Australia Pty Ltd
Solar Business Group
2 Wonderland Drive, Eastern Creek, NSW 2766
Ph: (02) 88054038
E-Mail: solar.sales@lge.com.au
Web:lgenergy.com.au

LG Electronics Inc.
Solar Business Division
Twin Building, Western Tower, 11F,
128, Yeoui-daero, Yeongdeungpo-gu,
Seoul, 07336, Korea
www.lg.com/global/business

Product specifications are subject to change without prior notice.
Date: 12/2018

Copyright © 2018 LG Electronics.
All rights reserved.

ROCK GAP
Energy Services

E[redacted] A[redacted]

[redacted] [redacted] J[redacted] C[redacted]

[redacted] [redacted] H[redacted]
[redacted] A[redacted]

[redacted]
[redacted]
[redacted] G[redacted]

[redacted]
[redacted] E[redacted] [redacted] G[redacted] E[redacted]
[redacted] E[redacted] LEED A[redacted]
J[redacted] L[redacted] [redacted] MCBC[redacted] CEM

M[redacted]

Table of Contents

Executive Summary 3
1.0 Introduction 5
[illegible]
2.0 Facility Description 9
[illegible]
3.0 Historical Energy Consumption Analysis 14
[illegible]
4.0 Summary of Potential Energy Savings by System 22
[illegible]
5.0 Energy Conservation Measures 28
[illegible]
6.0 Measures for Future Consideration 38
[illegible]
7.0 Operations and Maintenance Measures 41
[illegible]
8.0 Measures Not Feasible 42
9.0 Next Steps 42

APPENDICES
Appendix 1 Calculations and Cost Estimates

E[redacted]

[redacted]

I[redacted] E[redacted] J[redacted] C[redacted]

- D[redacted]
- [redacted]
- [redacted] A[redacted] AE [redacted] II [redacted]

[redacted] ECM[redacted]

B[redacted] J[redacted] D[redacted]

[redacted]	A[redacted] C[redacted]	A[redacted] C[redacted]
E[redacted]	[redacted]	[redacted]
E[redacted] D[redacted]	[redacted]	[redacted]
[redacted] G[redacted]	[redacted]	[redacted]
M[redacted] C[redacted] M C[redacted]	[redacted]	[redacted] A
[redacted] A[redacted] E[redacted] C[redacted]	[redacted]	[redacted]

[redacted] ECM[redacted] J[redacted] C[redacted] ECM[redacted]

A[redacted]	E[redacted]	C[redacted]	[redacted]
E[redacted]	[redacted]	[redacted]	[redacted]
E[redacted] D[redacted]	[redacted]	[redacted]	[redacted]
[redacted] G[redacted]	[redacted]	[redacted]	[redacted]
[redacted]	[redacted]	[redacted]	[redacted] A
M[redacted] C[redacted] M C[redacted]	[redacted]	[redacted] A	[redacted]
[redacted] A[redacted] C[redacted]	[redacted]	[redacted]	[redacted]
[redacted] E[redacted] I[redacted] C[redacted]	[redacted]	[redacted]	[redacted]
C[redacted]	[redacted]	[redacted]	[redacted]

[redacted] ECM[redacted]

[redacted]

- [redacted] C[redacted]
- E[redacted] L[redacted]
- I[redacted] L[redacted]
- [redacted] L[redacted] M[redacted]
- [redacted]

[illegible] [illegible] [illegible] [

[redacted] Introduction

In [redacted] [redacted] [redacted]

[illegible] [illegible] [illegible]

EN ENERGY CONSERVATION MEASURE SUMMARY

ECM #	M[illegible]	[illegible] C[illegible]	I[illegible] C[illegible]	E[illegible] I[illegible]	I[illegible] C[illegible]	[illegible] I[illegible]	E[illegible]	A[illegible] E[illegible]	E[illegible] D[illegible]	E[illegible] D[illegible] C[illegible]	[illegible] G[illegible]	G[illegible] C[illegible]	[illegible]	[illegible]	A[illegible] E[illegible] MMB[illegible]
[illegible]	ECM[illegible]	[illegible]	[illegible]	[illegible]	[illegible]	[illegible]	[illegible]	[illegible]	[illegible]	[illegible]	[illegible]	[illegible]	[illegible]	[illegible]	[illegible]
[illegible]	ECM[illegible]	[illegible]	[illegible]	[illegible]	[illegible]	[illegible]	[illegible]	[illegible]	[illegible]	[illegible]	[illegible]	[illegible]	[illegible]	[illegible]	[illegible]
[illegible]	ECM[illegible]	[illegible]	[illegible]	[illegible]	[illegible]	[illegible]	[illegible]	[illegible]	[illegible]	[illegible]	[illegible]	[illegible]	[illegible]	[illegible]	[illegible]
[illegible]	ECM[illegible]	[illegible]	[illegible]	[illegible]	[illegible]	[illegible]	[illegible]	[illegible]	[illegible]	[illegible]	[illegible]	[illegible]	[illegible]	[illegible]	[illegible]
[illegible]	ECM[illegible]	[illegible]	[illegible]	[illegible]	[illegible]	[illegible]	[illegible]	[illegible]	[illegible]	[illegible]	[illegible]	[illegible]	[illegible]	[illegible]	[illegible]
	A[illegible]	[illegible]	[illegible]	[illegible]	[illegible]	[illegible]	[illegible]	[illegible]	[illegible]	[illegible]	[illegible]	[illegible]	[illegible]	[illegible]	[illegible]

EVALUATED BUT NOT RECOMMENDED ECM SUMMARY

ECM #	M[illegible]	[illegible] C[illegible]	I[illegible] C[illegible]	E[illegible] I[illegible]	I[illegible] C[illegible]	[illegible] I[illegible]	E[illegible]	A[illegible] E[illegible]	E[illegible] D[illegible]	E[illegible] D[illegible] C[illegible]	[illegible] G[illegible]	G[illegible] C[illegible]	[illegible]	[illegible]	A[illegible] E[illegible] MMB[illegible]
[illegible]	ECM[illegible]	[illegible]	[illegible]	[illegible]	[illegible]	[illegible]	[illegible]	[illegible]	[illegible]	[illegible]	[illegible]	[illegible]	[illegible]	[illegible]	[illegible]
[illegible]	ECM[illegible]	[illegible]	[illegible]	[illegible]	[illegible]	[illegible]	[illegible]	[illegible]	[illegible]	[illegible]	[illegible]	[illegible]	[illegible]	[illegible]	[illegible]
[illegible]	ECM[illegible]	[illegible]	[illegible]	[illegible]	[illegible]	[illegible]	[illegible]	[illegible]	[illegible]	[illegible]	[illegible]	[illegible]	[illegible]	[illegible]	[illegible]
[illegible]	ECM[illegible]	[illegible]	[illegible]	[illegible]	[illegible]	[illegible]	[illegible]	[illegible]	[illegible]	[illegible]	[illegible]	[illegible]	[illegible]	[illegible]	[illegible]
	A[illegible]	[illegible]	[illegible]	[illegible]	[illegible]	[illegible]	[illegible]	[illegible]	[illegible]	[illegible]	[illegible]	[illegible]	[illegible]	[illegible]	[illegible]

Savings Summary	Energy Cost ($/yr)	Electric (kWh/year)	Electric Demand (kW)	Natural Gas (therms/year)	Water (gal/year)	Mg CO2-e (metric tons)
Savings	$65,990	704,210	96	(587)	0	330
Annual Use	$147,471	1,423,360	310	4,354	N/A	697
% Reduction	**44.7%**	**49.5%**	**31.0%**	**-13.5%**	**N/A**	**47.4%**
New Annual Use	$81,481	719,150	214	4,941	N/A	367
Cost savings by fuel		$46,184	$20,418	-$611	$0	

[illegible] [illegible] C[illegible] F[illegible]

Utility	Energy Conversion		GHG Emissions	
	Unit	to Btu	Mg (Metric Tons)	Unit
Electric	kWh	3,412	0.0004734	CO2e/kWh
Natural Gas	therm	100,000	0.0053060	CO2e/therm

[illegible] EXAM ANSWERS

[illegible] [illegible] [illegible] [

D

E A C E M E C M I D E A E A C M I E A E A C M I E A E A C M I

FIELD DOCUMENTS

BOP DOCUMENTS

JOB CREW [illegible] AMM MFG [illegible] CM [illegible]

HAC [illegible]

- [illegible]
- [illegible]
- [illegible]
- [illegible]
- [illegible]

[illegible]

[redacted] E[redacted] [redacted] D[redacted]

[redacted] A[redacted] H[redacted]

[redacted] AH[redacted] [redacted] [redacted] [

[redacted] AHU [redacted] [redacted] [redacted] [redacted] [redacted] [redacted] [redacted] [redacted] AHU [redacted] [redacted] [redacted] [redacted] [redacted] [redacted] [redacted]

F[redacted] M[redacted] C[redacted] [redacted] A[redacted] H[redacted] [redacted]

[redacted] C[redacted] [redacted]

C[redacted] [redacted] [redacted] [redacted] [redacted] [redacted] [redacted] [

[redacted] HVAC C[redacted]

[redacted] A[redacted] DDC[redacted] AH[redacted] A[redacted] A[redacted]

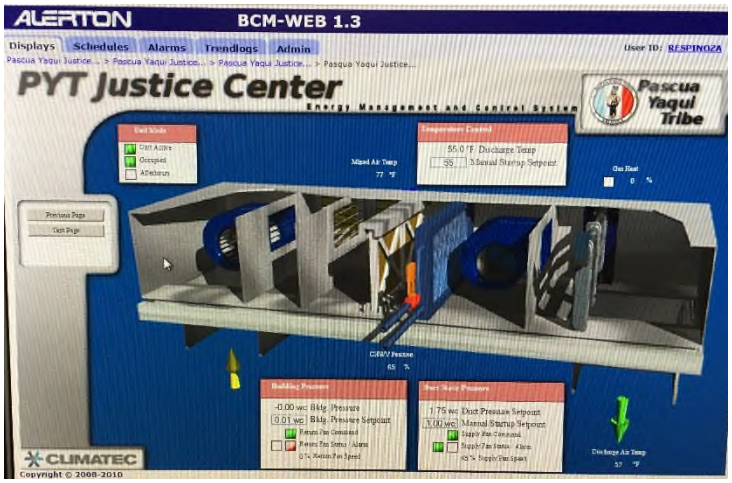

F[redacted] C[redacted] G[redacted]

[redacted] L[redacted]

[redacted] CFL[redacted]

E[redacted]

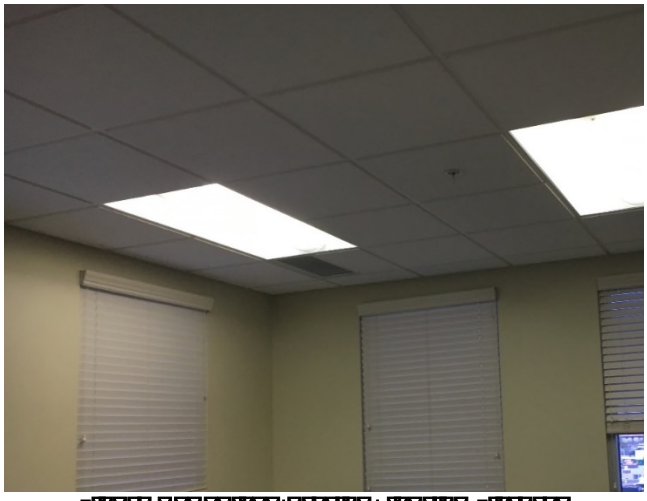

F[redacted] I[redacted] L[redacted] F[redacted]

[redacted] DRILLING HOLE [redacted]

[redacted]

[redacted] EQUIPMENT

[redacted]

[redacted]

[redacted]

[redacted] CONTRACT

[redacted]

[redacted] H[redacted]E[redacted] C[redacted] [redacted] A[redacted]

[redacted]

[redacted] I[redacted]

[redacted]

E[redacted] C[redacted] M[redacted] [redacted]

[redacted]E[redacted] C[redacted] [redacted] [redacted]

[redacted]	[redacted]	[redacted]
E[redacted]	[redacted]	[redacted]
E[redacted] D[redacted]	[redacted]	[redacted]
E[redacted] B[redacted]	[redacted]	[redacted]
[redacted]G[redacted]	[redacted]	[redacted]

[redacted] E[redacted] H[redacted]

B[redacted] C[redacted]

H[redacted]E[redacted] [redacted] C[redacted]

[redacted]

[redacted]E[redacted] [redacted] C[redacted] C[redacted]

C[redacted]	E[redacted]	E[redacted] D[redacted]	[redacted] G[redacted]	E[redacted] C[redacted]	[redacted] G[redacted] C[redacted]	[redacted] C[redacted]	D[redacted] D[redacted] C[redacted]	D[redacted] D[redacted] H[redacted]	L[redacted] F[redacted]
J[redacted]	[redacted]	[redacted]	[redacted]	[redacted]	[redacted]	[redacted]	[redacted]	[redacted]	[redacted]
F[redacted]	[redacted]	[redacted]	[redacted]	[redacted]	[redacted]	[redacted]	[redacted]	[redacted]	[redacted]
M[redacted]	[redacted]	[redacted]	[redacted]	[redacted]	[redacted]	[redacted]	[redacted]	[redacted]	[redacted]
A[redacted]	[redacted]	[redacted]	[redacted]	[redacted]	[redacted]	[redacted]	[redacted]	[redacted]	[redacted]
M[redacted]	[redacted]	[redacted]	[redacted]	[redacted]	[redacted]	[redacted]	[redacted]	[redacted]	[redacted]
J[redacted]	[redacted]	[redacted]	[redacted]	[redacted]	[redacted]	[redacted]	[redacted]	[redacted]	[redacted]
J[redacted]	[redacted]	[redacted]	[redacted]	[redacted]	[redacted]	[redacted]	[redacted]	[redacted]	[redacted]
A[redacted]	[redacted]	[redacted]	[redacted]	[redacted]	[redacted]	[redacted]	[redacted]	[redacted]	[redacted]
[redacted]	[redacted]	[redacted]	[redacted]	[redacted]	[redacted]	[redacted]	[redacted]	[redacted]	[redacted]
[redacted]	[redacted]	[redacted]	[redacted]	[redacted]	[redacted]	[redacted]	[redacted]	[redacted]	[redacted]
[redacted]	[redacted]	[redacted]	[redacted]	[redacted]	[redacted]	[redacted]	[redacted]	[redacted]	[redacted]
D[redacted]	[redacted]	[redacted]	[redacted]	[redacted]	[redacted]	[redacted]	[redacted]	[redacted]	[redacted]
[redacted]	[redacted]	[redacted]	[redacted]	[redacted]	[redacted]	[redacted]	[redacted]	[redacted]	[redacted]

E C D L F

CDD HDD D J

G E

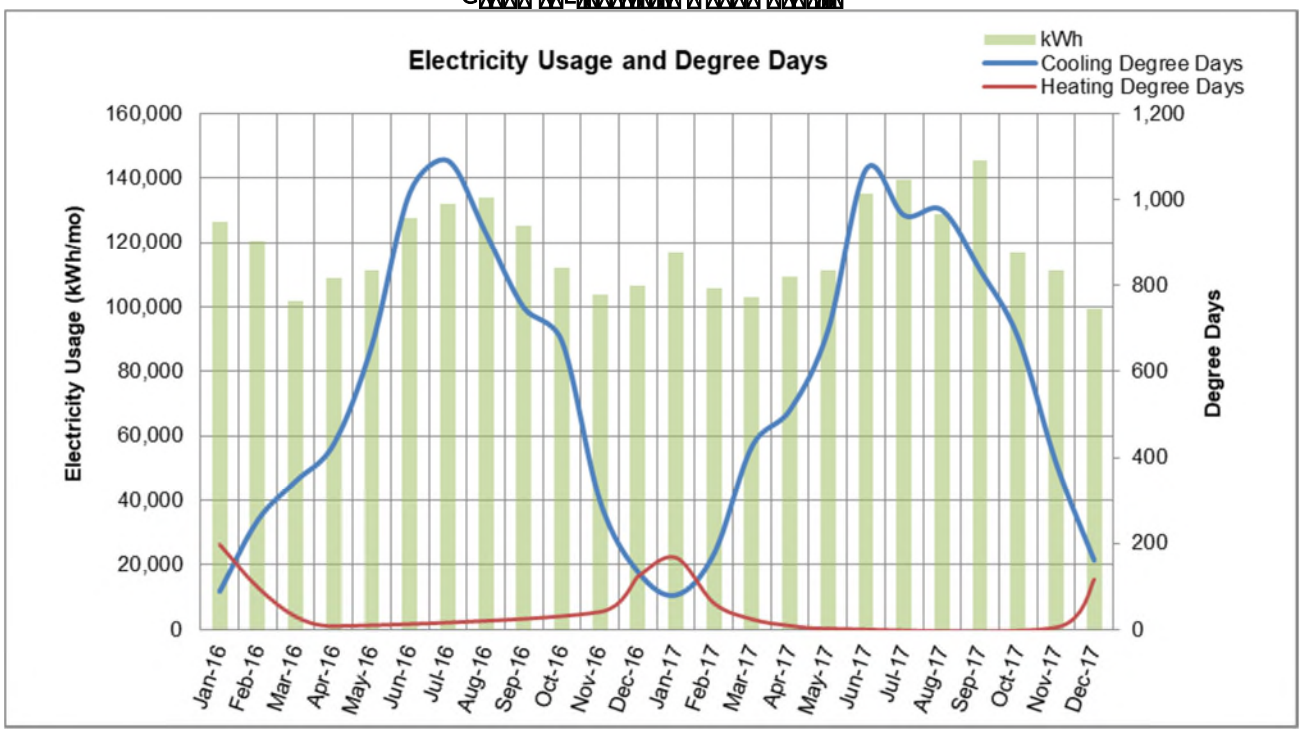

C[illegible] [illegible] [illegible] [

G[illegible] [illegible] L[illegible] F[illegible]

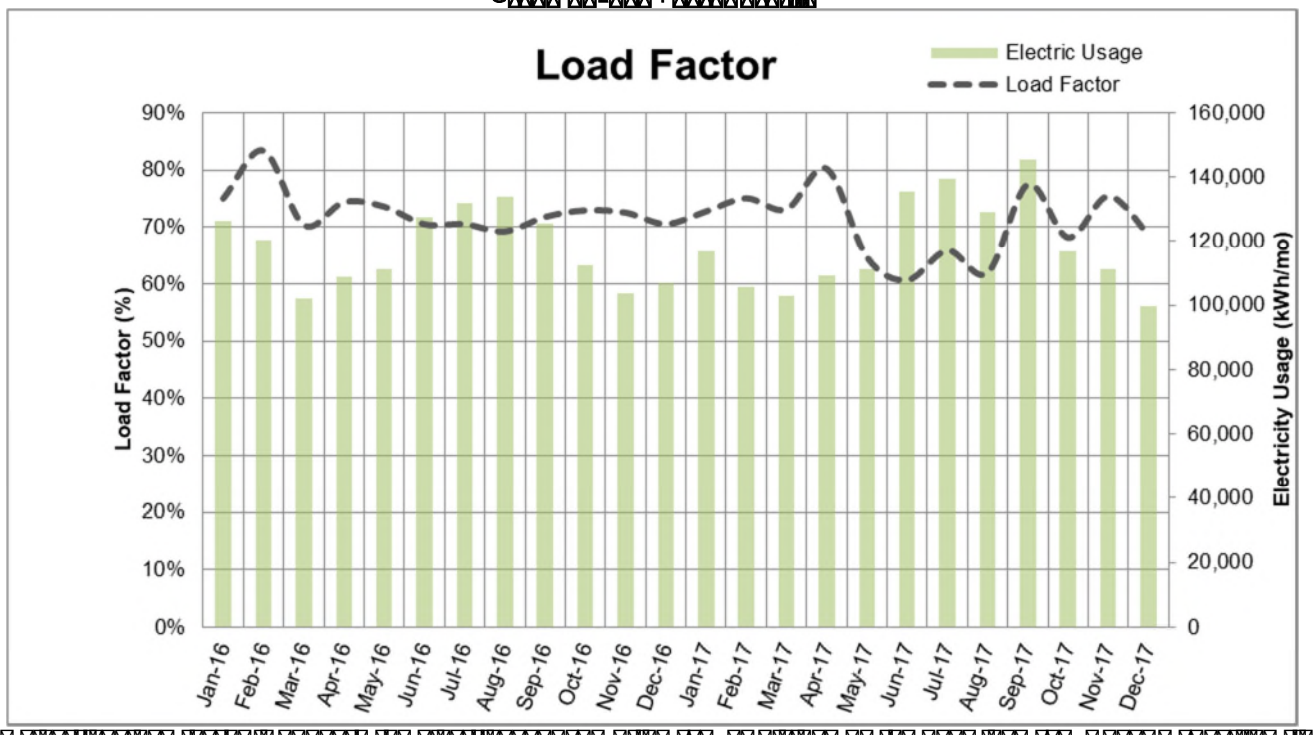
Load Factor
Electric Usage
Load Factor
Load Factor (%)
Electricity Usage (kWh/mo)
90%
80%
70%
60%
50%
40%
30%
20%
10%
0%
160,000
140,000
120,000
100,000
80,000
60,000
40,000
20,000
0
Jan-16
Feb-16
Mar-16
Apr-16
May-16
Jun-16
Jul-16
Aug-16
Sep-16
Oct-16
Nov-16
Dec-16
Jan-17
Feb-17
Mar-17
Apr-17
May-17
Jun-17
Jul-17
Aug-17
Sep-17
Oct-17
Nov-17
Dec-17

[illegible] [illegible] [illegible] [

G[illegible] [illegible] [illegible] G[illegible] [illegible] [illegible]

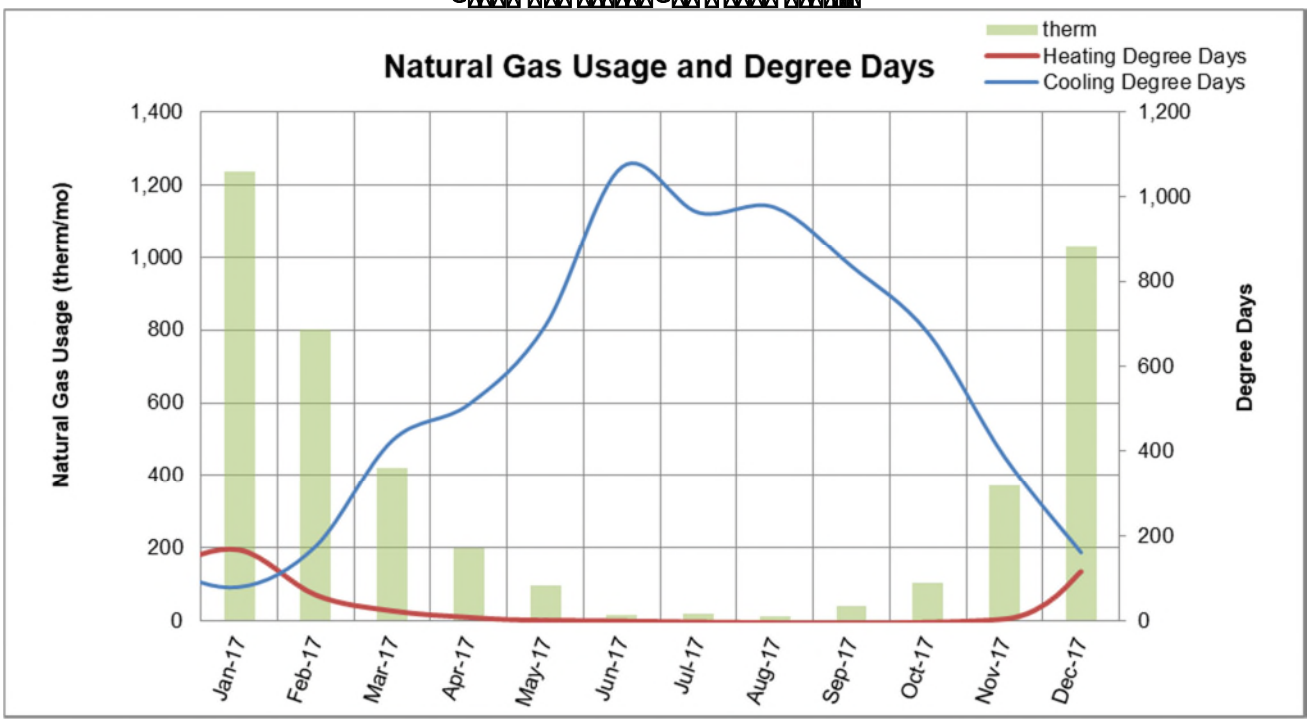
Natural Gas Usage and Degree Days
therm
Heating Degree Days
Cooling Degree Days
Natural Gas Usage (therm/mo)
Degree Days
1,400
1,200
1,000
800
600
400
200
0
1,200
1,000
800
600
400
200
0
Jan-17
Feb-17
Mar-17
Apr-17
May-17
Jun-17
Jul-17
Aug-17
Sep-17
Oct-17
Nov-17
Dec-17

[illegible] [illegible] [illegible] [

[redacted] ENERGY USAGE DISTRIBUTION

[redacted] ENERGY USAGE DISTRIBUTION BY FUEL

[redacted] [redacted] [redacted] [

[redacted] ENERGY COST DISTRIBUTION BY FUEL

[redacted] [redacted] [redacted] [

GRAPH OF EXISTING ENERGY USAGE DISTRIBUTION

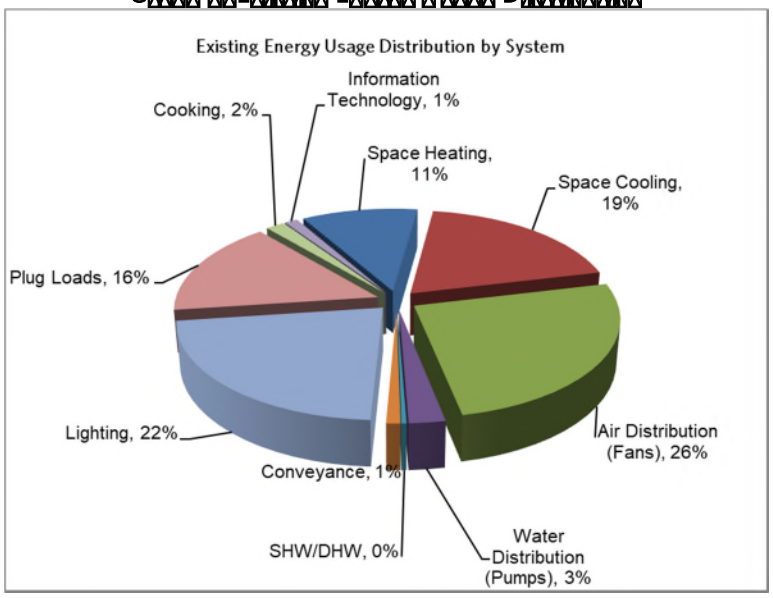

EXISTING ENERGY USAGE DISTRIBUTION

End Use	Electric (kWh/yr)	Natural Gas (therm/yr)	Total Site Energy Use (MMBtu/yr)	% of Total Electric Usage	% of Total Natural Gas Usage	% of Total Energy Usage
Space Heating	93,252	3,113	629	6%	71%	11%
Space Cooling	335,144	0	1,144	21%	0%	19%
Air Distribution (Fans)	448,441	0	1,530	28%	0%	26%
Water Distribution (Pumps)	44,238	0	151	3%	0%	3%
SHW/DHW	0	204	20	0%	5%	0%
Conveyance	17,117	0	58	1%	0%	1%
Lighting	389,224	0	1,328	24%	0%	22%
Plug Loads	277,977	0	948	17%	0%	16%
Process Loads	0	0	0	0%	0%	0%
Refrigeration	0	0	0	0%	0%	0%
Cooking	0	1,038	104	0%	24%	2%
Information Technology	20,931	0	71	1%	0%	1%
Other	0	0	0	0%	0%	0%
Total	**1,626,325**	**4,354**	**5,984**	**100%**	**100%**	**100%**

[illegible] [illegible] & [illegible] [illegible] ENERGY [illegible] [illegible]

[illegible] ECM [illegible] [illegible] [illegible] ECM [illegible] [illegible] [illegible]

[illegible] [illegible] E[illegible] [illegible] D[illegible]

		Space Heating		Space Cooling		Air Distribution (Fans)	Water Distribution (Pumps)	Lighting	Plug Loads
ECM #	Measure Name	Electric Savings (kWh/yr)	Natural Gas Savings (therms/yr)	Electric Savings (kWh/yr)	Natural Gas Savings (therms/yr)	Electric Savings (kWh/yr)	Electric Savings (kWh/yr)	Electric Savings (kWh/yr)	Electric Savings (kWh/yr)
1	ECM-1: Retro-Commissioning	0	653	106,752	0	85,402	21,350	0	0
2	ECM-2: Exterior Lighting Upgrade	0	0	0	0	0	0	120,542	0
3	ECM-3: Interior Lighting Upgrade	0	-1,240	0	0	0	0	134,932	0
4	ECM-4: Plug Load Management	0	0	0	0	0	0	0	27,798
5	ECM-5: Solar PV	0	0	0	0	0	0	0	0
Annual Total Savings		0	-587	106,752	0	85,402	21,350	255,474	27,798

		Space Heating		Space Cooling		Air Distribution (Fans)	Water Distribution (Pumps)	Lighting	Plug Loads
ECM #	Measure Name	Electric Savings (kWh/yr)	Natural Gas Savings (therms/yr)	Electric Savings (kWh/yr)	Natural Gas Savings (therms/yr)	Electric Savings (kWh/yr)	Electric Savings (kWh/yr)	Electric Savings (kWh/yr)	Electric Savings (kWh/yr)
6	ECM-6: Replace Chillers	0	0	71,919	0	0	0	0	0
7	ECM-7: Low Flow Fixtures	0	0	0	0	0	0	0	0
8	ECM-8: Install Energy Star Appliances	0	0	0	0	0	0	0	3,139
9	ECM-9: DHW Heater Upgrade	0	0	0	0	0	0	0	0
Annual Total Savings		0	0	71,919	0	0	0	0	3,139

[illegible] [illegible] [illegible] [illegible] [illegible] [illegible] *E[illegible]* [illegible] [illegible] [illegible] [illegible] [illegible] [illegible] [illegible] [illegible] [illegible] [illegible] *GHG*[illegible]

[illegible] J[illegible] C[illegible] E[illegible] A[illegible]

I[illegible] ECM[illegible] [illegible]CM[illegible] [illegible] [illegible] [illegible] [illegible] [illegible] [illegible] [illegible] [illegible] [illegible] [illegible] [illegible] [illegible] [illegible] [illegible]

[illegible] [illegible] [illegible] [illegible] [illegible]

Annual Energy Usage	Existing	Proposed	Unit	Existing Cost	Proposed Cost	% Savings
Electricity	1,423,360	719,150	kWh	$93,348	$47,164	49.5%
Summer Peak kW	310	214	kW	$49,591	$29,173	31.0%
Winter Peak kW	232	135	kW			41.5%
Natural Gas	4,354	4,941	therm	$4,533	$5,144	-13.5%
Metric Tons CO_2e	697.1	366.8	$MgCO_2e$	NA	NA	47.4%
				$147,471	**$81,481**	**44.7%**

A[illegible] ECM[illegible] [illegible] [illegible] [illegible] [illegible] [illegible] [illegible] [illegible] [illegible] [illegible] [illegible] [illegible] [illegible] [illegible] [illegible] [illegible] [illegible]

G[illegible] [illegible] E[illegible] [illegible] D[illegible]

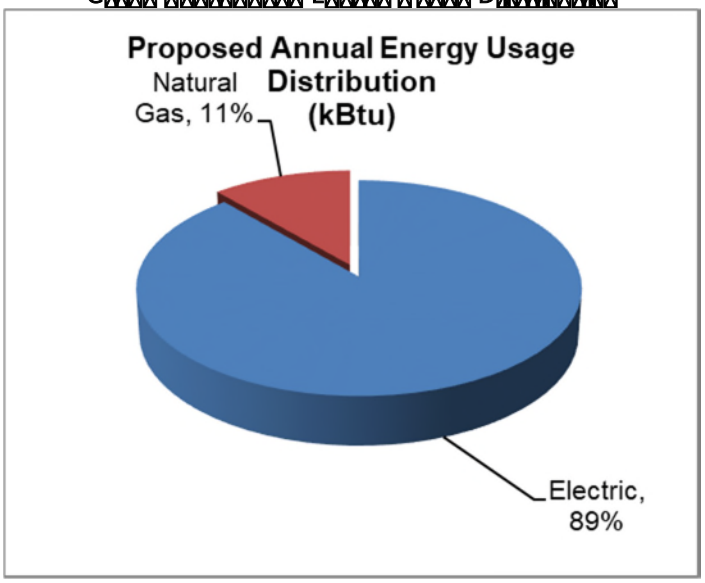

[illegible] K[illegible] [illegible] [illegible] I[illegible]

[illegible] [illegible] [illegible] [illegible] K[illegible] [illegible] [illegible] [illegible] [illegible] [illegible] [illegible] [illegible] [illegible] [illegible] [illegible] ECM[illegible] [illegible] K[illegible] [illegible] [illegible] [illegible] [illegible] [illegible] [illegible] [illegible] [illegible] [illegible] [illegible] [illegible] [illegible] [illegible] [illegible] [illegible] [

[illegible] EUI [illegible] [illegible] EUI [illegible] [illegible] [illegible] [illegible] ECM[illegible] [illegible] [illegible]

G[illegible] [illegible] E[illegible] [illegible] I[illegible] [illegible] EUI [illegible]

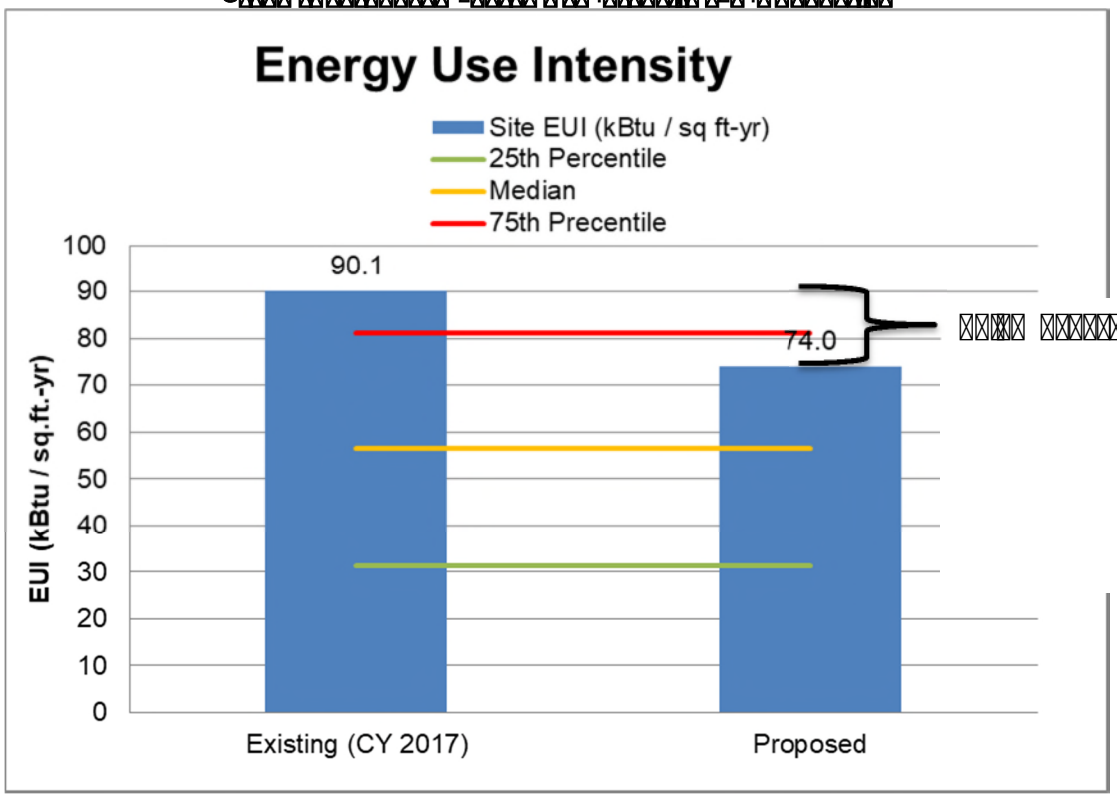

[illegible] E[illegible] [illegible] [illegible] [illegible] I[illegible] [illegible]

[illegible] [illegible] [illegible] [

G[illegible] [illegible] E[illegible] [illegible] D[illegible] C[illegible] [illegible]

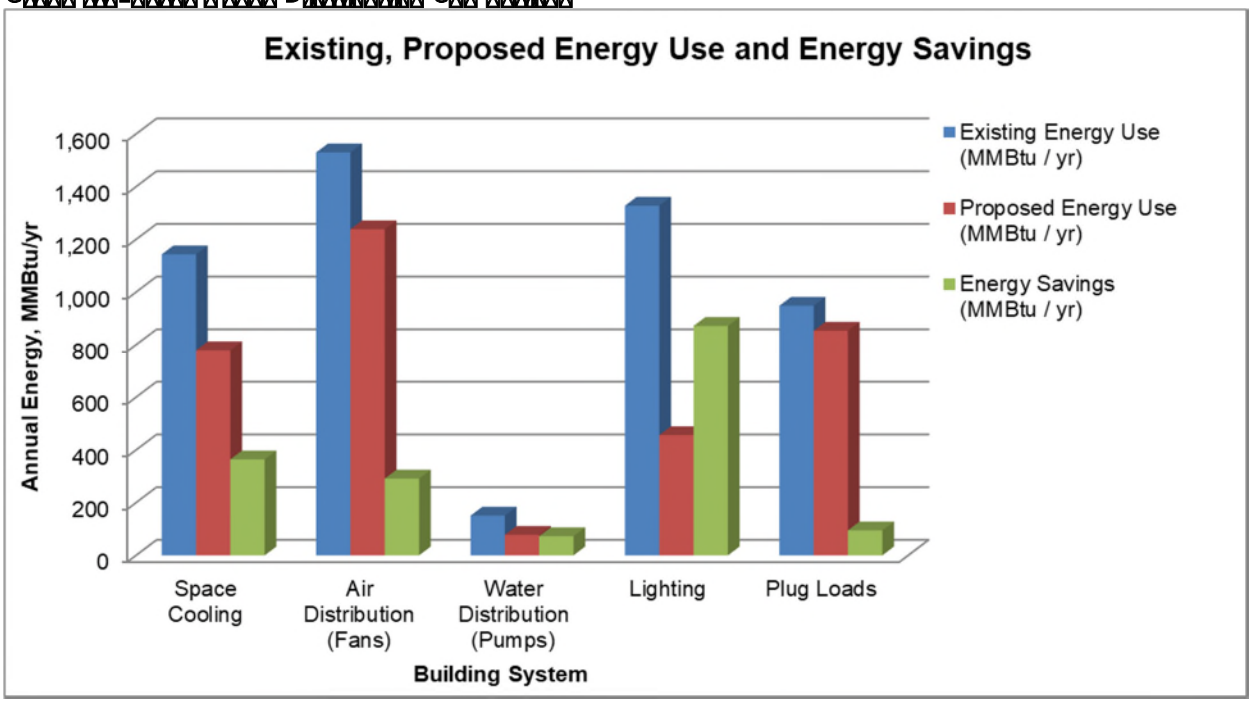
Existing, Proposed Energy Use and Energy Savings
Annual Energy, MMBtu/yr
1,600
1,400
1,200
1,000
800
600
400
200
0
Space Cooling
Air Distribution (Fans)
Water Distribution (Pumps)
Lighting
Plug Loads
Building System
Existing Energy Use (MMBtu / yr)
Proposed Energy Use (MMBtu / yr)
Energy Savings (MMBtu / yr)

[illegible] [illegible] [illegible] [illegible]

End Uses Type	Existing Annual Energy Use			Proposed Annual Energy Use			% Reduction
	Electric (kWh/yr)	Natural Gas (therm/yr)	Total Site Energy Use (MMBtu/yr)	Electric (kWh/yr)	Natural Gas (therm/yr)	Total Site Energy Use (MMBtu/yr)	
Space Heating	93,252	3,113	629	93,252	3,700	688	-9%
Space Cooling	335,144	0	1,144	228,392	0	779	32%
Air Distribution (Fans)	448,441	0	1,530	363,039	0	1,239	19%
Water Distribution (Pumps)	44,238	0	151	22,887	0	78	48%
SHW/DHW	0	204	20	0	204	20	0%
Conveyance	17,117	0	58	17,117	0	58	0%
Lighting	389,224	0	1,328	133,750	0	456	66%
Plug Loads	277,977	0	948	250,180	0	854	10%
Cooking	0	1,038	104	0	1,038	104	0%
Information Technology	20,931	0	71	20,931	0	71	0%
Total Estimated	1,626,325	4,354	5,984	1,129,549	4,941	4,348	27%
Total per Sq-ft	27.7	0.1	0.1	19.2	0.1	0.1	

[illegible] E[illegible] C[illegible] M[illegible]

[illegible] EC[illegible] [illegible] ECM[illegible] [illegible] [illegible] [

F[redacted] [redacted] B[redacted] [redacted] D[redacted]

AH[redacted]A [redacted] AH[redacted]B E[redacted] [redacted]

D[redacted] [redacted] E[redacted] [redacted] [redacted] [redacted] [redacted] [redacted] [redacted] [redacted] AH[redacted]A [redacted] AH[redacted]B [redacted] [redacted] [redacted] [redacted] [redacted] [redacted] [redacted]

[illegible] FD[illegible] H[illegible] A[illegible]

Recommendation

[illegible] EC[illegible] C[illegible] H[illegible] AC [illegible]

[illegible] EC[illegible] C[illegible] M[illegible] I[illegible] M[illegible] C[illegible] C[illegible] M[illegible] C[illegible] M[illegible] C[illegible] M

ECM

Economic Summary

ECM

Existing Condition

- F
- F
- E
- CFL
- CFL
- E
- L
-

Recommendation

EC LED LED

[redacted] E[redacted] L[redacted]

E[redacted] F[redacted]	[redacted] F[redacted] L[redacted]	[redacted] F[redacted] L[redacted]
[redacted]	[redacted] LED [redacted]	F[redacted]
[redacted]	[redacted] LED [redacted]	F[redacted]
[redacted]	[redacted] LED [redacted]	L[redacted]
[redacted]	[redacted] LED [redacted]	L[redacted]
[redacted]	[redacted] LED [redacted]	L[redacted]
[redacted] CFL [redacted]	[redacted] LED [redacted]	L[redacted]
[redacted]	[redacted] LED [redacted]	L[redacted]
[redacted] C[redacted]	[redacted] LED [redacted]	L[redacted]

F[redacted] E[redacted] [redacted] F[redacted] LED [redacted]

Interactive Effects

[redacted]

[illegible] ECM [illegible] I[illegible] L[illegible]

Economic Summary

ECM[illegible]
E[illegible]
A[illegible] M[illegible] D[illegible]
G[illegible]
E[illegible] C[illegible]
E[illegible] I[illegible] C[illegible]
[illegible]
M[illegible] C[illegible] M[illegible]

Existing Condition

[illegible]

- [illegible]
- [illegible]
- [illegible] CFL[illegible]
- [illegible] L[illegible]
- E[illegible] H[illegible]
- F[illegible] H[illegible]
- [illegible] L[illegible]
- [illegible] H[illegible]

[illegible] LED [illegible]

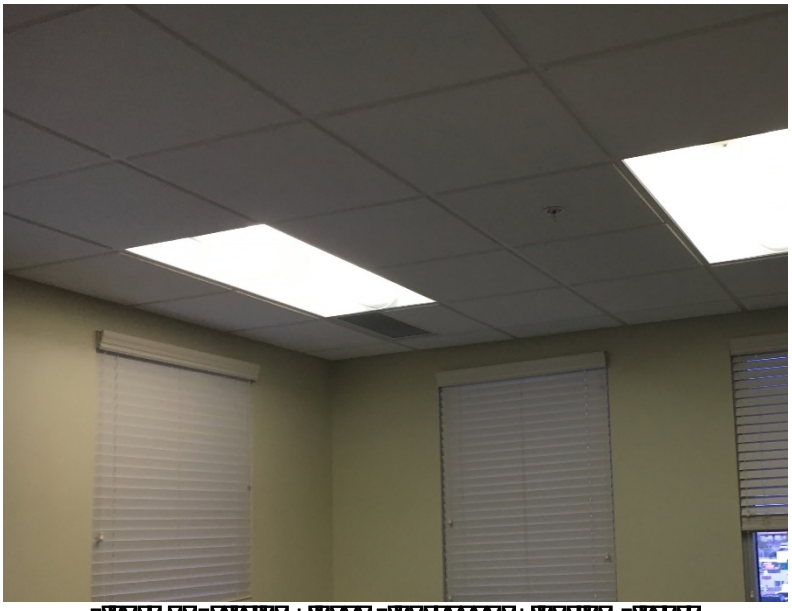

F[redacted] [redacted]E[redacted] L[redacted] F[redacted] L[redacted] F[redacted]

Recommendation

[redacted] ECM [redacted] [redacted] [redacted] [redacted] [redacted] [redacted] [redacted] LED [redacted] [redacted]

L[redacted] [redacted] [redacted] [redacted] [redacted] [redacted] [redacted] [redacted] [redacted] [redacted] [redacted] LED [redacted] [redacted] [redacted] [redacted] [redacted] [redacted] [redacted] [redacted] [redacted] [redacted]

[redacted] ECM [redacted] L[redacted] M[redacted]

Economic Summary

ECM[redacted]
E[redacted]
A[redacted] M[redacted] D[redacted]
[redacted] G[redacted]
E[redacted] C[redacted]
E[redacted] I[redacted] C[redacted]
[redacted]
GHG E[redacted] M[redacted]

Existing Condition

[redacted]

Recommendation

[redacted] AC [redacted]

[redacted]

F[redacted]

[redacted]

Interactive Effects

[redacted]

[redacted] ECM [redacted]

Economic Summary

ECM[redacted]
E[redacted]
A[redacted] M[redacted] D[redacted]
E[redacted] C[redacted]
E[redacted] I[redacted] C[redacted]
[redacted]
E[redacted] I[redacted]
[redacted] C[redacted]
[redacted] I[redacted]
M[redacted] C[redacted] M[redacted]

Existing Condition

[redacted] J[redacted] C[redacted]

[redacted] A[redacted] F[redacted]

Recommendation

[redacted] E[redacted] B[redacted]

[redacted]

F[redacted] L[redacted]

A [redacted]

[redacted] A[redacted]

Interactive Effects

[redacted]

[illegible] M[illegible] [illegible] F[illegible] C[illegible]

[illegible] ECM[illegible] [illegible] [illegible] [

[redacted] ECM [redacted] L[redacted] F[redacted] [redacted] F[redacted]

Economic Summary

ECM[redacted] [redacted]
E[redacted]
A[redacted] M[redacted] D[redacted]
[redacted] G[redacted]
[redacted]
E[redacted] C[redacted]
E[redacted] I[redacted] C[redacted]
[redacted]
M[redacted] C[redacted] M[redacted]

Existing Condition

[redacted]

F[redacted] E[redacted] F[redacted]

Recommendation

[redacted]

[redacted]

Interactive Effects

[redacted]

[redacted] ECM [redacted] E[redacted] [redacted] A[redacted]

Economic Summary

ECM[redacted] [redacted] [redacted]
E[redacted] [redacted] [redacted]
A[redacted] M[redacted] D[redacted] [redacted]
D[redacted] [redacted] [redacted]
[redacted] G[redacted] [redacted]
E[redacted] [redacted] C[redacted]
E[redacted] [redacted] I[redacted] [redacted] C[redacted]
[redacted] [redacted] [redacted]
GHG E[redacted] [redacted] M[redacted]

Existing Condition

[redacted]

F[redacted] E[redacted]

Recommendation

[redacted]

Interactive Effects

[redacted]

[redacted] MM [redacted] MOTOR

[redacted] HOT [redacted] MOTOR [redacted] [redacted] [redacted]

[illegible] M[illegible] [illegible] F[illegible]

D[illegible] [illegible] [illegible] [illegible] E[illegible] [illegible] [illegible] [

ROCK GAP
Energy Services

A[illegible] DI[illegible]

CALC[illegible] LA[illegible] A[illegible] D C[illegible] E[illegible] IMA[illegible]

ROCK GAP
Energy Services

ECM-1: Retro-Commissioning
Justice Center
Energy Audit
February-2019
NORESCO

ECM
E
A M D
G
E C
E I C
GHG E M C

Total Annual Electric Energy Consumption (kWh)	Total Annual Natural Gas Consumption (Therm)	Average monthly peak kW	RCx savings %
1,423,360	4354	233	15.0%

ROCK GAP
Energy Services

ECM-2: Exterior Lighting Upgrade

Justice Center
Energy Audit
February-2019
NORESCO

ECM [illegible]
E[illegible]
A[illegible]
B[illegible]
E[illegible]
E[illegible]
[illegible]
M[illegible]

Light Fixture Location	Fixture Quantity	Lighting Control	Area Illuminated	Annual Operating Hours	Existing Exterior Lighting					Proposed Exterior Lighting				Energy Savings (kWh)
					Quantity Fixtures Burned Out	Fixture Type	Watts Per Fixture	Watts Per Ballast (Burned Out Fixtures)	Energy Consumption (kWh)	Replacement Lamp/Fixture	Watts Per Fixture	Replacement Lamp/Fixture Count	Energy Consumption (kWh)	
Site Lighting	39	Time clock		4,380	0	SA, SB, SD	460	0	78,577	LED Shoebox Pole Light	120	39	20,498	58,079
Site Lighting	1	Time clock		4,380	0	SC	920	0	4,030	LED Shoebox Pole Light	240	2	1,051	2,978
Site Lighting	6	Time clock		4,380	0	SA, SB, SD	460	0	12,089	LED Shoebox Pole Light	120	6	3,154	8,935
Site Lighting	20	Time clock		4,380	0	SE	90	0	7,884	4 Tube CFL Repl	18	40	1,577	6,307
Site Lighting	1	Time clock		4,380	0	SF	175	0	767	LED Wall Pack 30W	30	1	131	635
Site Lighting	17	Time clock		4,380	0	SG	80	0	5,957	LED Corn Light 16W	16	17	1,191	4,765
Site Lighting	43	Time clock		4,380	0	SH, SJ, SL, SM	80	0	15,067	LED Corn Light 14W	14	43	2,637	12,430
Site Lighting	16	Time clock		4,380	0	SK	60	0	4,205	LED Corn Light 8W	8	16	561	3,644
Site Lighting	2	Time clock		4,380	0	FP	120	0	1,051	N/R	120	2	1,051	0
Vehicle Sallyport	18	Manual		4,380	0	SP	230	0	18,133	LED Corn Light 54W	54	18	4,257	13,876
Central Plant	9	Time clock		4,380	0	L25	90	0	3,548	4 Tube CFL Repl	18	18	710	2,838
Central Plant	2	Time clock		4,380	0	L10	60	0	526	4' T5 LED	26	4	228	298
Police Exterior	10	Time clock		4,380	0	SN	35	0	1,533	4 Tube CFL Repl	9	10	394	1,139
Office Exterior	8	Time clock		4,380	0	L36	120	0	4,205	4 pin LED Repl	60	16	2,102	2,102
Office Exterior	3	Time clock		4,380	0	L27	30	0	394	2 Pin LED Repl	10	6	131	263
Firing Range Ext.	4	Time clock		4,380	0	L20	60	0	1,051	4' T5 LED	26	8	456	596
Firing Range Ext.	2	Time clock		4,380	0	L27	30	0	263	2 Pin LED Repl	10	4	88	175
Police Exterior	13	Time clock		4,380	0	L27	30	0	1,708	2 Pin LED Repl	10	26	569	1,139
Court Exterior	3	Time clock		4,380	0	SN	35	0	460	4 Tube CFL Repl	9	3	118	342
									161,447					**120,542**

Annual Months of Demand Savings		0
Demand Coincidence Factor		0%

Replacement Lamp/Fixture	Count
LED Shoebox Pole Light Fixture	47
LED Corn Light 54W	18
4 Tube CFL Repl	71
4' T5 LED	12
2 Pin LED Repl	36
LED Corn Light 8W	16
4 pin LED Repl	16
LED Corn Light 14W	43
LED Corn Light 16W	17
LED Wall Pack 30W	1
N/R	2

ROCK GAP
Energy Services

ECM-3: Interior Lighting Upgrade

Justice Center
Energy Audit
February-2019
NORESCO

ECM [illegible]
E[illegible]
A[illegible]
[illegible]
E[illegible]
E[illegible]
M[illegible]

	Existing											Proposed						Savings	
Floor	Room Number	Space Type	Lamp Type	# of Fixtures	Lighting Control	Number of Burned Out Fixtures	Lamps / Fixture	Watts / Lamp	Ballast Factor	Run Hours	Demand (kW)	Energy Usage (kWh)	Fixture Type	# of Fixtures	Lamps / Fixture	Watts / Lamp	Total New Lamps	Demand (kW)	Energy Usage (kWh)	Demand (kW)	Energy Savings (kWh)
1 - West	1001 Security and Gallery	Hallway	4, 14, 16- 32W TR	13	No Sensor	0	1	35	1	4,368	0.5	1,987	4 Tube CFL Repl	13	1	9	13	0.1	511	0.3	1,476
1 - West	1001 Security and Gallery	Hallway	L28 - 4' T5	20	No Sensor	0	2	30	1	4,368	1.2	5,242	4' T5 LED	20	2	13	40	0.5	2,271	0.7	2,970
1 - West	All offices with L1	Office	1, 17, 10, 22 - 4' T5	41	Sensor	0	2	30	1	1,680	2.5	4,133	4' T5 LED	41	2	13	82	1.1	1,791	1.4	2,342
1 - West	Conference with L1	Conference	1, 17, 10, 22 - 4' T5	17	Sensor	0	2	30	1	1,277	1.0	1,302	4' T5 LED	17	2	13	34	0.4	564	0.6	738
1 - West	Restrooms	Bathroom	4, 14, 16- 32W TR	30	Sensor	0	1	35	1	2,822	1.1	2,964	4 Tube CFL Repl	30	1	9	30	0.3	762	0.8	2,201
1 - West	Office L3	Office	L3, L20 - 4' T5	6	No Sensor	0	2	30	1	2,400	0.4	864	4' T5 LED	6	2	13	12	0.2	374	0.2	490
1 - West	Storage L3	Storage	L3, L20 - 4' T5	9	Sensor	0	2	30	1	168	0.5	91	4' T5 LED	9	2	13	18	0.2	39	0.3	51
1 - West	Conference with L2	Conference	L2 - 2' T5	4	Sensor	0	2	18	1	1,277	0.1	179	2' T5 LED	4	2	8	8	0.1	82	0.1	97
1 - West	Hallways	Hallway	L2 - 2' T5	43	No Sensor	0	2	18	1	4,368	1.5	6,574	2' T5 LED	43	2	8	86	0.7	3,005	0.8	3,569
1 - West	Pretrial	Office	L29 - 2' TSHO	27	No Sensor	0	3	28	1	2,400	2.3	5,443	2' T5 LEDHO	27	3	12	81	1.0	2,333	1.3	3,110
1 - West	Secure Hall	Hallway	L9, 13, 11 - 4' T5	8	No Sensor	0	3	30	1	4,368	0.7	3,145	4' T5 LED	8	3	13	24	0.3	1,363	0.4	1,782
1 - West	Hallways	Hallway	4, 14, 16- 32W TR	3	No Sensor	0	1	35	1	4,368	0.1	459	4 Tube CFL Repl	3	1	9	3	0.0	118	0.1	341
1 - West	Closets	Storage	L6, 26 - 4' T5	6	Sensor	0	2	30	1	168	0.4	60	4' T5 LED	6	2	13	12	0.2	26	0.2	34
1 - West	Toilets	Bathroom	L5 - 3' TSHO	6	Sensor	0	1	28	1	2,822	0.2	474	3' T5 LEDHO	6	1	16	6	0.1	271	0.1	203
1 - West	Restrooms	Bathroom	L8 - 6' TSHO	4	Sensor	0	2	45	1	2,822	0.4	1,016	3' T5 LEDHO	4	2	16	8	0.1	361	0.2	655
1 - West	Offices	Office	L7, F1- 32W TRT	4	No Sensor	0	1	35	1	2,400	0.1	336	4 Tube CFL Repl	4	1	9	4	0.0	86	0.1	250
1 - West	Courtroom	Office	L30	20	No Sensor	0	2	60	1	2,400	2.4	5,760	4 pin LED Repl	20	2	30	40	1.2	2,880	1.2	2,880
1 - West	Courtroom	Office	L31 - 4' TSHO	6	No Sensor	0	2	58	1	2,400	0.7	1,656	4' T5 LEDHO	6	2	24	12	0.3	691	0.4	965
1 - West	Courtroom	Office	L32 - 2' TSHO	2	No Sensor	0	2	30	1	2,400	0.1	288	2' T5 LEDHO	2	2	12	4	0.0	115	0.1	173
1 - West	Courtroom	Office	L33	8	No Sensor	0	1	60	1	2,400	0.5	1,152	4 pin LED Repl	8	1	30	8	0.2	576	0.2	576
1 - West	Courtroom	Office	L34	4	No Sensor	0	2	30	1	2,400	0.2	576	in LED Repl 26w	4	2	10	8	0.1	192	0.2	384
1-Classroom Bldg	Classroom	Office	L9, 13, 11 - 4' T5	37	No Sensor	0	3	30	1	2,400	3.3	7,992	4' T5 LED	37	3	13	111	1.4	3,463	1.9	4,529
1-Classroom Bldg	Toilets	Bathroom	1, 17, 10, 22 - 4' T5	3	No Sensor	0	2	30	1	4,032	0.2	726	4' T5 LED	3	2	13	6	0.1	314	0.1	411
1-Classroom Bldg	Storage	Storage	L6, 26 - 4' T5	2	No Sensor	0	2	30	1	240	0.1	29	4' T5 LED	2	2	13	4	0.1	12	0.1	16
1-Police	Office	Police Office	1, 17, 10, 22 - 4' T5	78	No Sensor	0	2	30	1	8,736	4.7	40,884	4' T5 LED	78	2	13	156	2.0	17,717	2.7	23,168
1-Police	Conf	Conference	1, 17, 10, 22 - 4' T5	13	No Sensor	0	2	30	1	1,824	0.8	1,423	4' T5 LED	13	2	13	26	0.3	617	0.4	806
1-Police	Evidence Storage	Active Storage	L12 - 4' T5	23	No Sensor	0	4	30	1	1,152	2.8	3,180	4' T5 LED	23	4	13	92	1.2	1,378	1.6	1,802
1-Police	Evidence Storage	Active Storage	L3, L20 - 4' T5	20	Sensor	0	2	30	1	806	1.2	968	4' T5 LED	20	2	13	40	0.5	419	0.7	548
1-Police	Evidence Storage	Active Storage	1, 17, 10, 22 - 4' T5	7	Sensor	0	2	30	1	806	0.4	339	4' T5 LED	7	2	13	14	0.2	147	0.2	192
1-Police	Corridors	Hallway	L2 - 2' T5	65	No Sensor	0	2	18	1	4,368	2.3	9,937	2' T5 LED	65	2	8	130	1.0	4,543	1.2	5,394
1-Police	Corridors	Hallway	L7, F1- 32W TRT	13	No Sensor	0	1	35	1	4,368	0.5	1,987	4 Tube CFL Repl	13	1	9	13	0.1	511	0.3	1,476
1-Police	Restrooms	Bathroom	4, 14, 16- 32W TR	24	Sensor	0	1	35	1	2,822	0.8	2,371	4 Tube CFL Repl	24	1	9	24	0.2	610	0.6	1,761
1-Police	Restrooms	Bathroom	L5 - 3' TSHO	4	Sensor	0	1	28	1	2,822	0.1	316	3' T5 LEDHO	4	1	16	4	0.1	181	0.0	135
1-Police	Restrooms	Bathroom	L8 - 6' TSHO	2	Sensor	0	2	45	1	2,822	0.2	508	3' T5 LEDHO	2	2	16	4	0.1	181	0.1	327
1-Police	Closets	Storage	L6, 26 - 4' T5	11	Sensor	0	2	30	1	168	0.7	111	4' T5 LED	11	2	13	22	0.3	48	0.4	63
1-Police	Holding Cells	Conference	L9, 13, 11 - 4' T5	65	No Sensor	0	3	30	1	1,824	5.9	10,670	4' T5 LED	65	3	13	195	2.5	4,624	3.3	6,047
1-Police	Control Room	Conference	4, 14, 16- 32W TR	12	No Sensor	0	1	35	1	1,824	0.4	766	4 Tube CFL Repl	12	1	9	12	0.1	197	0.3	569
1-Police	Closets	Storage	1, 17, 10, 22 - 4' T5	5	No Sensor	0	2	30	1	240	0.3	72	4' T5 LED	5	2	13	10	0.1	31	0.2	41
1-Police	Kitchen	Conference	L9, 13, 11 - 4' T5	7	No Sensor	0	3	30	1	1,824	0.6	1,149	4' T5 LED	7	3	13	21	0.3	498	0.4	651
2-Police	Private Offices	Police Office	1, 17, 10, 22 - 4' T5	68	Sensor	0	2	30	1	6,115	4.1	24,950	4' T5 LED	68	2	13	136	1.8	10,812	2.3	14,138
2-Police	Open Office	Police Office	1, 17, 10, 22 - 4' T5	30	Sensor	0	2	30	1	6,115	1.8	11,007	4' T5 LED	30	2	13	60	0.8	4,770	1.0	6,238
2-Police	Conference Rooms	Conference	1, 17, 10, 22 - 4' T5	29	Sensor	0	2	30	1	1,277	1.7	2,222	4' T5 LED	29	2	13	58	0.8	963	1.0	1,259
2-Police	Hallways	Hallway	1, 17, 10, 22 - 4' T5	27	No Sensor	0	2	30	1	4,368	1.6	7,076	4' T5 LED	27	2	13	54	0.7	3,066	0.9	4,010
2-Police	Records/Supplies	Active Storage	L3, L20 - 4' T5	19	Sensor	0	2	30	1	806	1.1	919	4' T5 LED	19	2	13	38	0.5	398	0.6	521
2-Police	Storage	Storage	1, 17, 10, 22 - 4' T5	6	Sensor	0	2	30	1	168	0.4	60	4' T5 LED	6	2	13	12	0.2	26	0.2	34
2-Police	Hallways	Hallway	L2 - 2' T5	61	Sensor	0	2	18	1	3,058	2.1	6,528	2' T5 LED	61	2	8	122	1.0	2,984	1.2	3,544
2-Police	conference	Conference	L7, F1- 32W TRT	14	Sensor	0	1	35	1	1,277	0.5	626	4 Tube CFL Repl	14	1	9	14	0.1	161	0.4	465
2-Police	storage	Storage	L3, L20 - 4' T5	2	Sensor	0	2	30	1	168	0.1	20	4' T5 LED	2	2	13	4	0.1	9	0.1	11
2-Police	Restrooms	Bathroom	4, 14, 16- 32W TR	40	Sensor	0	1	35	1	2,822	1.4	3,951	4 Tube CFL Repl	40	1	9	40	0.4	1,016	1.0	2,935
2-Police	Restrooms	Bathroom	L8 - 6' TSHO	4	Sensor	0	2	45	1	2,822	0.4	1,016	3' T5 LEDHO	4	2	16	8	0.1	361	0.2	655
2-Police	Restrooms	Bathroom	L5 - 3' TSHO	5	Sensor	0	1	28	1	2,822	0.1	395	3' T5 LEDHO	5	1	16	5	0.1	226	0.1	169
2-Police	Showers	Bathroom	4, 14, 16- 32W TR	8	No Sensor	0	1	35	1	4,032	0.3	1,129	4 Tube CFL Repl	8	1	9	8	0.1	290	0.2	839
2-Police	Locker Rm	Bathroom	L6, 26 - 4' T5	13	Sensor	0	2	30	1	2,822	0.8	2,201	4' T5 LED	13	2	13	26	0.3	954	0.4	1,248
2-Police	Closets	Storage	L6, 26 - 4' T5	5	No Sensor	0	2	30	1	240	0.3	72	4' T5 LED	5	2	13	10	0.1	31	0.2	41
2-Police	Storage	Storage	1, 17, 10, 22 - 4' T5	4	No Sensor	0	2	30	1	240	0.2	58	4' T5 LED	4	2	13	8	0.1	25	0.1	33
B-Firing Range	Hallways	Hallway	Existing LEDs	7	No Sensor	0	2	13	1	4,368	0.2	795	N/R	7	2	13	14	0.2	795	0.0	0
B-Firing Range	Hallways	Hallway	Existing LEDs	5	No Sensor	0	2	13	1	4,368	0.1	568	N/R	5	2	13	10	0.1	568	0.0	0
B-Firing Range	Storage	Storage	Existing LEDs	6	No Sensor	0	2	13	1	240	0.2	37	N/R	6	2	13	12	0.2	37	0.0	0
B-Firing Range	Storage	Storage	Existing LEDs	4	No Sensor	0	2	13	1	240	0.1	25	N/R	4	2	13	8	0.1	25	0.0	0
B-Firing Range	Range Master	Police Office	Existing LEDs	3	No Sensor	0	2	13	1	8,736	0.1	681	N/R	3	2	13	6	0.1	681	0.0	0
B-Firing Range	Firing Range	Police Office	Existing LEDs	25	No Sensor	0	2	13	1	8,736	0.7	5,678	N/R	25	2	13	50	0.7	5,678	0.0	0
B-Firing Range	Firing Range	Police Office	Existing LEDs	18	No Sensor	0	2	13	1	8,736	0.5	4,088	N/R	18	2	13	36	0.5	4,088	0.0	0
B-Firing Range	Firing Range	Police Office	Existing LEDs	4	No Sensor	0	2	13	1	8,736	0.1	909	N/R	4	2	13	8	0.1	909	0.0	0
1-Firing Range	Stairs	Hallway	Existing LEDs	4	No Sensor	0	2	13	1	4,368	0.1	454	N/R	4	2	13	8	0.1	454	0.0	0
1-Office Building	Training Room	Conference	1, 17, 10, 22 - 4' T5	16	No Sensor	0	2	30	1	1,824	1.0	1,751	4' T5 LED	16	2	13	32	0.4	759	0.5	992
1-Office Building	Training Room	Conference	L35	12	No Sensor	0	2	60	1	1,824	1.4	2,627	4 pin LED Repl	12	2	30	24	0.7	1,313	0.7	1,313
1-Office Building	Training Room	Conference	L34	6	No Sensor	0	2	30	1	1,824	0.4	657	in LED Repl 26w	6	2	10	12	0.1	219	0.2	438
1-Office Building	Training Room	Conference	L30	11	No Sensor	0	2	60	1	1,824	1.3	2,408	4 pin LED Repl	11	2	30	22	0.7	1,204	0.7	1,204
1-Office Building	Storage	Storage	L12 - 4' T5	3	No Sensor	0	4	30	1	240	0.4	86	4' T5 LED	3	4	13	12	0.2	37	0.2	49
1-Office Building	Storage	Storage	1, 17, 10, 22 - 4' T5	4	No Sensor	0	2	30	1	240	0.2	58	4' T5 LED	4	2	13	8	0.1	25	0.1	33
1-Office Building	Equip	Storage	L6, 26 - 4' T5	4	No Sensor	0	2	30	1	240	0.2	58	4' T5 LED	4	2	13	8	0.1	25	0.1	33
1-Office Building	stairs	Hallway	1, 17, 10, 22 - 4' T5	2	No Sensor	0	2	30	1	4,368	0.1	524	4' T5 LED	2	2	13	4	0.1	227	0.1	297
1-Office Building	Ante Room and AV	Office	L7, F1- 32W TRT	12	Sensor	0	1	35	1	1,680	0.4	706	4 Tube CFL Repl	12	1	9	12	0.1	181	0.3	524
1-Office Building	Ante Room	Office	L3, L20 - 4' T5	2	Sensor	0	2	30	1	1,680	0.1	202	4' T5 LED	2	2	13	4	0.1	87	0.1	114
1-Office Building	Hallways	Hallway	L2 - 2' T5	11	No Sensor	0	2	18	1	4,368	0.4	1,682	2' T5 LED	11	2	8	22	0.2	769	0.2	913
1-Office Building	Stairs	Hallway	L6, 26 - 4' T5	1	No Sensor	0	2	30	1	4,368	0.1	262	4' T5 LED	1	2	13	2	0.0	114	0.0	149
1-Office Building	Restrooms	Bathroom	4, 14, 16- 32W TR	14	Sensor	0	1	35	1	2,822	0.5	1,383	4 Tube CFL Repl	14	1	9	14	0.1	356	0.4	1,027
1-Office Building	Restrooms	Bathroom	L8 - 6' TSHO	2	Sensor	0	2	45	1	2,822	0.2	508	3' T5 LEDHO	2	2	16	4	0.1	181	0.1	327
1-Office Building	Restrooms	Bathroom	L5 - 3' TSHO	1	Sensor	0	1	28	1	2,822	0.0	79	3' T5 LEDHO	1	1	16	1	0.0	45	0.0	34
1-Office Building	Entry Hall	Hallway	L28 - 4' T5	9	No Sensor	0	2	30	1	4,368	0.5	2,359	4' T5 LED	9	2	13	18	0.2	1,022	0.3	1,337
2-Office Building	Pvt Office	Office	1, 17, 10, 22 - 4' T5	32	Sensor	0	2	30	1	1,680	1.9	3,226	4' T5 LED	32	2	13	64	0.8	1,398	1.1	1,828
2-Office Building	Conference	Conference	1, 17, 10, 22 - 4' T5	3	Sensor	0	2	30	1	1,277	0.2	230	4' T5 LED	3	2	13	6	0.1	100	0.1	130
2-Office Building	Conference	Conference	L7, F1- 32W TRT	10	Sensor	0	1	35	1	1,277	0.4	447	4 Tube CFL Repl	10	1	9	10	0.1	115	0.3	332
2-Office Building	Corridors	Hallway	L7, F1- 32W TRT	8	No Sensor	0	1	35	1	4,368	0.3	1,223	4 Tube CFL Repl	8	1	9	8	0.1	314	0.2	909
2-Office Building	Corridors	Hallway	L2 - 2' T5	6	No Sensor	0	2	18	1	4,368	0.2	917	2' T5 LED	6	2	8	12	0.1	419	0.1	498
2-Office Building	Jan	Storage	1, 17, 10, 22 - 4' T5	2	No Sensor	0	2	30	1	240	0.1	29	4' T5 LED	2	2	13	4	0.1	12	0.1	16
1-Office Building	Toilets	Bathroom	4, 14, 16- 32W TR	3	Sensor	0	1	35	1	2,822	0.1	296	4 Tube CFL Repl	3	1	9	3	0.0	76	0.1	220
1-Office Building	Toilets	Bathroom	L5 - 3' TSHO	3	Sensor	0	1	28	1	2,822	0.1	237	3' T5 LEDHO	3	1	16	3	0.0	135	0.0	102
1-Office Building	Conference	Conference	L3, L20 - 4' T5	4	No Sensor	0	2	30	1	1,824	0.2	438	4' T5 LED	4	2	13	8	0.1	190	0.1	248
1-Office Building	Stairs	Hallway	1, 17, 10, 22 - 4' T5	4	No Sensor	0	2	30	1	4,368	0.2	1,048	4' T5 LED	4	2	13	8	0.1	454	0.1	594
1-Animal Control	Office	Office	1, 17, 10, 22 - 4' T5	4	Sensor	0	2	30	1	1,680	0.2	403	4' T5 LED	4	2	13	8	0.1	175	0.1	228
1-Animal Control	Toilets	Bathroom	4, 14, 16- 32W TR	1	Sensor	0	1	35	1	2,822	0.0	99	4 Tube CFL Repl	1	1	9	1	0.0	25	0.0	73
1-Animal Control	Toilets	Bathroom	L5 - 3' TSHO	1	Sensor	0	1	28	1	2,822	0.0	79	3' T5 LEDHO	1	1	16	1	0.0	45	0.0	34
1-Animal Control	Storage	Storage	1, 17, 10, 22 - 4' T5	1	Sensor	0	2	30	1	168	0.1	10	4' T5 LED	1	2	13	2	0.0	4	0.0	6
1-Animal Control	Kennels	Office	L3, L20 - 4' T5	8	No Sensor	0	2	30	1	2,400	0.5	1,152	4' T5 LED	8	2	13	16	0.2	499	0.3	653
TOTAL	-	-	-	**1283**	-		-	-			**72.8**	**227,777**	-	**1283**	-	-	**2525.0**	**31.8**	**103,759**	**41.0**	**124,018**

Typical Lighting Operating Hours

		Hours / Day					Annual Hours	
Space Type	Average Hours Saved From Sensors/ BMS	Mon. - Fri.	Sat.	Sun.	Hours / Week	Weeks / Year	Without Sensors	With Sensors
Police Office	30%	24	24	24	168	52	**8,736**	**6,115**
Lobby	30%	12	12	12	84	52	**4,368**	**3,058**
Office	30%	10	0	0	50	48	**2,400**	**1,680**
Hallway	30%	12	12	12	84	52	**4,368**	**3,058**
Bathroom	30%	12	12	12	84	48	**4,032**	**2,822**
Storage	30%	1	0	0	5	48	**240**	**168**
Conference	30%	8	4	4	38	48	**1,824**	**1,277**
Active Storage	30%	4	2	2	24	48	**1,152**	**806**

Existing				Proposed	
Existing Lamp	Watts/ Lamp	Lamps/ Fixture	Ballast Factor	New Fixture	New Watts/ Lamp
"U" T8	32		1.00	"U" LED	15
L35	60	2	1.00	4 pin LED Repl	30
F2 - Halogen Flood	90	1	1.00	ew in LED PAR 38 equiva	13
L1, 17, 10, 22 - 4' T5	30	2	1.00	4' T5 LED	13
L2 - 2' T5	18	2	1.00	2' T5 LED	8
L3, L20 - 4' T5	30	2	1.00	4' T5 LED	13

New Lamp	Quantity of new Lamp
4' T5 LED	**1,529**
2' T5 LED	**380**
4 pin LED Repl	**94**
2' T5 LEDHO	**85**
3' T5 LEDHO	**44**
Screw in LED PAR 38	**0**

ROCK GAP
Energy Services

L4, 14, 16- 32W TRT	35	1	1.00	4 Tube CFL Repl	9
L5 - 3' T5HO	28	1	1.00	3' T5 LEDHO	16
L6, 26 - 4' T5	30	2	1.00	4' T5 LED	13
L7, F1- 32W TRT	35	1	1.00	4 Tube CFL Repl	9
L8 - 6' T5HO	45	2	1.00	3' T5 LEDHO	16
L9, 13, 11 - 4' T5	30	3	1.00	4' T5 LED	13
L34	30	2	1.00	4 pin LED Repl 26weql	10
L12 - 4' T5	30	4	1.00	4' T5 LED	13
L28 - 4' T5	30	2	1.00	4' T5 LED	13
L29 - 2' T5HO	28	3	1.00	2' T5 LEDHO	12
L30	60	2	1.00	4 pin LED Repl	30
L31 - 4' T5HO	58	2	1.00	4' T5 LEDHO	24
L32 - 2' T5HO	30	2	1.00	2' T5 LEDHO	12
L33	60	1	1.00	4 pin LED Repl	30
Existing LEDs	13	2	1.00	N/R	13

4' T5 LEDHO	**12**
4 Tube CFL Repl	**209**
4 pin LED Repl 26weql	**20**
N/R	**152**

Plant	Fuel	System Efficiency	% of Load	Conversion Factor
Heating	Natural Gas	[illegible]	100%	100
	#2 Fuel Oil	[illegible]	0%	139.4
	Electric	1.0	0%	3.412

HVAC Interaction Calculation*

HVAC Cooling Interaction Factor ($HVAC_C$)	HVAC Cooling Demand Factor ($HVAC_D$)	Estimated Lighting Savings in Cooled Space	Cooling Demand Savings (kW)	Cooling Energy Savings (kWh)	HVAC Heating Interaction Factor ($HVAC_C$)	Estimated Lighting Savings in Heated Space	Gas Heating Savings (therms)	Oil Heating Savings (gal)	Electric Heating Savings (kWh)
0.11	0.20	80%	**6.6**	**10,914**	-0.010	100%	**-1,240**	**0**	**0**

Annual Months of Demand Savings	12
Demand Coincidence Factor	1.0

ROCK GAP
Energy Services

ECM-4: Plug Load Management
Justice Center
Energy Audit
February-2019
NORESCO

ECM
E
A M D
G
E C
E I C
GHG E M C

Estimated Plug Load (kWh)	Controllable Plug Loads	Total Energy for Plug Load Management (kWh)	Plug load Savings %	Plug load Savings kWh
277,977	50%	138,989	20%	27,798

Estimated Number of Controlled Outlets
95

ROCK GAP
Energy Services

ECM-5: Solar PV
Justice Center
Energy Audit
February-2019
NORESCO

ECM [illegible]
E [illegible]
A [illegible] M [illegible] D [illegible]
E [illegible] C [illegible]
E [illegible] I [illegible] C [illegible]
[illegible]
E [illegible] I [illegible]
[illegible] C [illegible]
[illegible] I [illegible]
M [illegible] C [illegible] M C [illegible]

Annual Production from Aurora Solar:
207,434 kWh

Baseline electric consumption:
1,423,360 kWh

% Offset
14.6%

System Size :
128 kW

PROJECT FINANCIAL ECONOMICS

Annual Maintenance Cost	$3,200
Cost per kw installed (Gross)	$3,030
nstalled Cost	$387,840
Markup	120%
Sell Price	$465,408
Tax Credit	$164,622
Net Price	$300,786

Monthly kW savings											
6.44	12.34	6.57	27.96	29.18	13.94	15.21	19.59	10.8	7.72	8.88	4.25
Jan	Feb	Mar	Apr	May	Jun	Jul	Aug	Sep	Oct	Nov	Dec

ROCK GAP
Energy Services

ECM-6: Replace Chillers
Justice Center
Energy Audit
February-2019
NORESCO

ECM[illegible]	
E[illegible]	[illegible]
A[illegible] M[illegible] D[illegible]	[illegible]
[illegible]	[illegible]
E[illegible]	[illegible]
E[illegible]	[illegible]
[illegible]	[illegible]
M[illegible]	[illegible]

Description	Existing		Proposed		Savings	
	Chiller 1	Chiller 2	Chiller 1	Chiller 2	Chiller 1	Chiller 2
Rated Chiller Capacity (tons)	90	90	90	90	-	-
EER	9.60	9.60	13.80	13.80		
Efficiency (kW/ton)	1.25	1.25	0.87	0.87	0.38	0.38
Full Load Power Draw (kW)	112.5	112.5	78.2608696	78.26086957	34.2	34.2
Equivalent Full Load Hours (hours)	1099	1099	1099	1099	-	-
Annual Electricity Consumption (kWh)	123,609	123,609	85,989	85,989	37620.0	37620.0
Interior lighting upgrade cooling savings (kWh)	5,457	5,457	3,796	3,796	-	-
Annual Electricity Consumption accounting for interior lighting upgrade interaction (kWh)	118,152	118,152	82,193	82,193	35,959	35,959

Annual Months of Demand Savings	9
Demand Coincidence Factor	0.8

Notes:
Cooling Equivalent Full Load Hours estimated based on weather bin data and energy end use breakdown

ROCK GAP
Energy Services

ECM [illegible]
Justice Center
Energy Audit
February-2019
NORESCO

ECM [illegible]	
E [illegible]	
A [illegible] M [illegible] D [illegible]	
[illegible] G [illegible]	
[illegible]	
E [illegible] C [illegible]	
E [illegible] I [illegible] C [illegible]	
[illegible]	
M [illegible] C [illegible]	

Baseline Domestic Hot & Cold Water Consumption Estimates

Plant	Fuel	Efficiency	% of Load	Conversion Factor
DHW	Natural Gas	78.0%	100%	100
	#2 Fuel Oil	85.0%	0%	139.4
	Electric	1.00	0%	3.413

[illegible]	[illegible]
294	65%

Total # of Visitors	Total # of Staff	Days per Year
191	0	260

Average Cold Water Temp. In (°F)	Average DHW Temp. Out (°F)	Temp Rise (°F)
50	130	80

Existing

Plumbing Fixtures	Daily Uses per Occupant	Flow Rate (gpf, gpm)	Duration (flush, Minutes)	Average Measured Output Temp	% CW	% DWH	Annual CW Gallons (1)	Annual DHW Gallons (2)
Toilets	2	1.43333333	1	N/A	100%	0%	142,433	0
Urinals	0.2	1	1	N/A	100%	0%	9,937	0
faucets	2.2	1.2	0.5	110	25%	75%	16,396	49,189
Showers	0	0	0	110	25%	75%	0	0
							168,767	49,189

Annual CW Gallons (1)	Annual DHW Gallons (2)	Total Annual Gallons	Utility Bill Gallons	Error From Utility Bills
168,767	**49,189**	**217,956**	NA	#VALUE!
77%	**23%**			

Proposed

Plumbing Fixtures	Daily Uses per Occupant	Flow Rate (gpf, gpm)	Duration (flush, Minutes)	Average Measured Output Temp	% CW	% DWH	Annual CW Gallons (1)	Annual DHW Gallons (2)
Toilets	2	1.43333333	1	N/A	100%	0%	142,433	0
Urinals	0.2	0.125	1	N/A	100%	0%	1,242	0
faucet	2.2	0.5	0.5	110	25%	75%	6,832	20,495
Showers	0	0	0	110	25%	75%	0	0
							150,507	20,495

Annual DHW Savings (Gallons)	DHW Heat Output (kBtu) (1)	Energy Savings			Water Savings
		Therms	Gallons (Fuel Oil)	kWh	Gallons
28,694	19,121	**245**	**0**	**0**	**46,953**

ROCK GAP
Energy Services

Plumbing Fixtures	
Toilets	0
Urinals	8
faucet	50

fixture counts are approximate and do not include the holding cell area fixtures which should remain

Notes:

1) Plumbing Fixtures Annual CW Gallons = (# Visitors + # Staff) x Days/Year x Daily Uses per Occupant x Fixture Flow Rate x Duration x % CW
2) Plumbing Fixtures Annual HW Gallons = (# Visitors + # Staff) x Days/Year x Daily Uses per Occupant x Fixture Flow Rate x Duration x % HW
3) Kitchen Cooking Annual CW Gallons = (# Visitors + # Staff) x Days/Year x (Gallons of Cooking Water + Drinking Water /Person/Meal) x % CW
4) Kitchen Cooking Annual HW Gallons = (# Visitors + # Staff) x Days/Year x (Gallons of Cooking Water + Drinking Water /Person/Meal) x % HW
5) Dishwasher Annual CW Gallons = Days/Year x Flow Rate x Hours/Day x Load Factor x % CW
6) Dishwasher Annual HW Gallons = Days/Year x Flow Rate x Hours/Day x Load Factor x % HW
7) Clothes Washer Loads/Year = Loads/Day x Days/Year
8) Clothes Washer Lbs/Year = Lbs Capacity x Loads/Year x Load Factor
9) Clothes Washer Annual CW Gallons = Lbs/Year x Water Consumption Factor x % CW
10) Clothes Washer Annual HW Gallons = Lbs/Year x Water Consumption Factor x % HW

ROCK GAP
Energy Services

ECM-8: Install Energy Star Appliances
Justice Center
Energy Audit
February-2019
NORESCO

ECM
E
A M D
D
G
E C
E I C
GHG E M C

Equipment	Quantity	Operating Days per year	Existing kWh / day	Energy Star kWh / day	Energy Savings (kWh)	
Commercial refrigerator	2	365	7	3	1,168	2 for police kitchen
Standard residential refrigerator	5	365	4	3	621	Estimating 2 in police, 1 for courthouse
Commercial freezer	1	365	11	7	1,351	1 for police kitchen
					3,139	

Demand Coincidence Factor	0.8
Months of Demand Savings	12

Notes: Existing and proposed Energy Star appliance daily energy consumption per commercial kitchen equipment savings calculator from energystar.gov. Demand coincidence factor based on 2018 NYSERDA Technical Resource Manual.
..https://www.energystar.gov/sites/.../commercial_kitchen_equipment_calculator.xlsx

ROCK GAP
Energy Services

ECM-9: DHW Heater Upgrade
Justice Center
Energy Audit
February-2019
NORESCO

ECM
E
A M D
G
F
A
E C
E I C
E I
I C
I
M C M C

Existing Boiler				Proposed Boiler				
Fuel Type	Existing Fuel Consumption* (Therms)	Combustion Efficiency (%)**	Annual Boiler Output (kBtu)	Fuel Type	Combustion Efficiency (%)	Fuel Input (kBtu)	Proposed Fuel Oil Consumption (Gallons)	Proposed Natural Gas Consumption (Therms)
Natural Gas	204	80%	16,320	Natural Gas	95%	17,179	0	172

Notes:
****Fuel consumption was based on end use breakdown analysis***
*****Combustion efficiency accounts for some degradation due to boiler age***

ROCK GAP
Energy Services

ECM-1: Retro-Commissioning									
N/N	SOURCE LINE ITEM	DESCRIPTION OF WORK	UNIT	QTY	MATERIAL		LABOR		TOTAL
					PER UNIT	TOTAL	PER UNIT	TOTAL	
1	Estimated based on past projects	RCx for Justice Center building.	sf	58,764		$ -	$ 0.65	$ 38,197	$ 38,197
2	Estimated based on past projects	Allowance to implement RCx measures	sf	58,764		$ -	$ 0.30	$ 17,629	$ 17,629
								Sub-Total	$ 55,826
								O&P 10%	$ 5,583
								CONTINGENCY 10%	$ 6,141
								ASBESTOS ABATEMENT	$ -
								ASBESTOS CONTINGENCY 0%	$ -
								PAYMENT & PERFORMANCE BOND 0%	$ -
								IC FEE 0%	$ -
								INTEREST DURING CONSTRUCTION 3%	$ 2,026
								DESIGN AND CM 20%	$ 13,915.14
								Other ( ) 0%	$ -
								Total	**$ 83,500**

ECM-2: Exterior Lighting Upgrade									
N/N	SOURCE LINE ITEM	DESCRIPTION OF WORK	UNIT	QTY	MATERIAL		LABOR		TOTAL
					PER UNIT	TOTAL	PER UNIT	TOTAL	
1	https://www.lighting-spot.com/led-corn-light-5000k-70-watt-mh.html	Retrofit in grade 70W MH uplight fixtures with 14W LED Corn lamps, bypass ballast	per lamp	43	$ 22	$ 963	$ 38	$ 1,632	$ 2,595
2	https://www.lighting-spot.com/hid-led-replacement-50w-hps-e26-3000k.html	Retrofit 70W HPS Bollard Lamps with 16W LED Corn lamps, bypass ballast	per lamp	17	$ 45	$ 772	$ 38	$ 645	$ 1,417
3	https://www.1000bulbs.com/product/204477/GLBLUX-10121.html	Replace 150W HPS Wall pack fixtures with 30W LED Wall pack fixtures	per fixture	1	$ 72	$ 72	$ 57	$ 57	$ 128
4	https://www.1000bulbs.com/product/208967/SATCO-S29850.html	Retrofit quad tube and triple tube CFLs with 9watt plug and play LED lamp	per lamp	71	$ 11	$ 781	$ 9	$ 674	$ 1,455
5	https://www.metalhalideshop.com/lp15229-venture-8w-led-retrofit-lamp.html	Retrofit 50PMH in grade fixtures with 8W Corn Lamps, bypass ballast	Per lamp	16	$ 30	$ 479	$ 38	$ 607	$ 1,086
6	https://www.1000bulbs.com/product/209377/GREENCREATIVE-98091.html	Retrofit 200W MH sallyport fixtures with 54W LED Corn lamps, bypass ballast	Per lamp	18	$ 76	$ 1,368	$ 76	$ 1,366	$ 2,734
7	https://www.1000bulbs.com/product/175499/PLT-10433.html	Retrofit 4' T5 Fixtures with LED Lamps, Plug and Play	Per Lamp	12	$ 9	$ 107	$ 9	$ 114	$ 221
8	Estimated	Retrofit 57W 4 Pin PL fixtures with LED lamps, plug and play	per lamp	16	$ 14	$ 224	$ 9	$ 152	$ 375
9	https://www.1000bulbs.com/product/192678/LUNERA-10064.html	Retrofit 13W 2 Pin CFL fixtures with LED lamps, plug and play	Per lamp	36	$ 9	$ 324	$ 9	$ 342	$ 666
10	https://www.ledlightexpert.com/150-Watt-LED-NextGen-II-Parking-Lot-Lights--20000-Lumen--5000K--Slip-Fit-Mount--WITH-photocell-_p_166.html	Replace parking lot pole fixtures with 150watt LED shoebox fixture	Per Fixture	47	$ 169	$ 7,943	$ 38	$ 1,784	$ 9,727
								Sub-Total	$ 20,405
								O&P 10%	$ 2,041
								CONTINGENCY 10%	$ 2,245
								ASBESTOS ABATEMENT	$ -
								ASBESTOS CONTINGENCY 0%	$ -
								PAYMENT & PERFORMANCE BOND 0%	$ -
								IC FEE 0%	$ -
								INTEREST DURING CONSTRUCTION 3%	$ 741
								DESIGN AND CM 20%	$ 5,086.17
								Other ( ) 0%	$ -
								Total	**$ 30,600**

ECM-3: Interior Lighting Upgrade									
N/N	SOURCE LINE ITEM	DESCRIPTION OF WORK	UNIT	QTY	MATERIAL		LABOR		TOTAL
					PER UNIT	TOTAL	PER UNIT	TOTAL	
1	https://www.1000bulbs.com/product/191727/GREENCREATIVE-57960.html?gclid=Cj0KCQiAj4biBRC-ARIsAA4WaFgqoTzAqEVlNg7VSYTC8o-s4UzrR-JdbjTZGPrTg9DybewQzpXY31waAhcyEALw_wcB	Retrofit 2' T5 Fixtures with LED Lamps, Plug and Play	per lamp	380	$ 14	$ 5,312	$ 9	$ 3,606	$ 8,918
2	https://www.prolighting.com/led-light-bulbs/t5ho-led-tubes/ph-467134.html	Retrofit 4' T5HO Fixtures with LED Lamps, Plug and Play	per lamp	12	$ 12	$ 143	$ 9	$ 114	$ 257
3	https://www.1000bulbs.com/product/208967/SATCO-S29850.html	Retrofit 42W and 32W 4 tube CFLs with 9watt plug and play LED lamp	per lamp	209	$ 11	$ 2,299	$ 9	$ 1,983	$ 4,282
4	Estimated	Retrofit 57W 4 Pin PL lamps with LED lamps, plug and play	per lamp	94	$ 14	$ 1,314	$ 9	$ 892	$ 2,206
5	https://www.1000bulbs.com/product/175499/PLT-10433.html	Retrofit 4' T5 Fixtures with LED Lamps, Plug and Play	Per Lamp	1,529	8.95	$ 13,685	$ 9	$ 14,508	$ 28,193
6	https://www.1000bulbs.com/product/209786/LED-733035KG2.html	Retrofit 26W 4 Pin PL lamps with LED lamps, plug and play	Per Lamp	20	10.25	$ 205	$ 9	$ 190	$ 395
7	https://www.prolighting.com/led-light-bulbs/t5ho-led-tubes/kt-led12t5ho-24gc-835-	Retrofit 2' T5HO fixtures with LED lamps, plug and play	Per Lamp	85	13.45	$ 1,143	$ 9	$ 807	$ 1,950
8	https://www.prolighting.com/led-light-bulbs/t5ho-led-tubes/kt-led16t5ho-36gc-850-	Retrofit 3' T5HO fixtures with LED lamps, plug and play	Per Lamp	44	13.45	$ 592	$ 9	$ 417	$ 1,009

ROCK GAP
Energy Services

9	https://www.1000bulbs.com/product/201161/IRT-10132.html?gclid=Cj0KCQiAj4biBRC-ARIsAA4WaFgmXs9GrWBgxQSN8DGJZO8MZ2xrOzxgjcyEY1_e5F-ITHQnmdJ4-awaApyFEALw_wcB	Retrofit 90W Halogen Flood lamps with LED lamps, plug and play	Per Lamp	-	5.49	$ -	$ 9	$ -	$ -
10	https://lampmaster.com/recycling-container-products/lampmaster/4ft-lampmaster-recycling-kit/	Fluorescent Lamp Recycling	per lamp	2,373	0.85	$ 2,017	$ -	$ -	$ 2,017
								Sub-Total	$ 49,227
								O&P 10%	$ 4,923
								CONTINGENCY 10%	$ 5,415
								ASBESTOS ABATEMENT	$ -
								ASBESTOS CONTINGENCY 0%	$ -
								PAYMENT & PERFORMANCE BOND 0%	$ -
								IC FEE 0%	$ -
								INTEREST DURING CONSTRUCTION 3%	$ 1,787
								DESIGN AND CM 20%	$ 12,270.30
								Other ( ) 0%	$ -
								Total	**$ 73,700**

ECM-4: Plug Load Management

N/N	SOURCE LINE ITEM	DESCRIPTION OF WORK	UNIT	QTY	MATERIAL PER UNIT	MATERIAL TOTAL	LABOR PER UNIT	LABOR TOTAL	TOTAL
1	Estimated based on past projects	Plug load controllers, wholesale price for large order w/ extended warrant & software programming	EA	95	$ 160.00	$ 15,200	$ 19	$ 1,803	$ 17,003
								Sub-Total	$ 17,003
								O&P 10%	$ 1,700
								CONTINGENCY 10%	$ 1,870
								ASBESTOS ABATEMENT	$ -
								ASBESTOS CONTINGENCY 0%	$ -
								PAYMENT & PERFORMANCE BOND 0%	$ -
								IC FEE 0%	$ -
								INTEREST DURING CONSTRUCTION 3%	$ 617
								DESIGN AND CM 20%	$ 4,238.12
								Other ( ) 0%	$ -
								Total	**$ 25,500**

ECM-5: Solar PV

N/N	SOURCE LINE ITEM	DESCRIPTION OF WORK	UNIT	QTY	MATERIAL PER UNIT	MATERIAL TOTAL	LABOR PER UNIT	LABOR TOTAL	TOTAL
1	https://news.energysage.com/much-solar-panels-cost-tucson-arizona/	Install 128kW roof mounted solar PV system including design, CM, labor	per kW	128	$ 3,030	$ 387,840		$ -	$ 387,840
								Sub-Total	$ 387,840
								O&P 0%	$ -
								CONTINGENCY 20%	$ 77,568
								ASBESTOS ABATEMENT	$ -
								ASBESTOS CONTINGENCY 0%	$ -
								PAYMENT & PERFORMANCE BOND 0%	$ -
								IC FEE 0%	$ -
								INTEREST DURING CONSTRUCTION 0%	$ -
								DESIGN AND CM 0%	$ -
								Other ( ) 0%	$ -
								Total	**$ 465,500**

ECM-6: Replace Chillers

N/N	SOURCE LINE ITEM	DESCRIPTION OF WORK	UNIT	QTY	MATERIAL PER UNIT	MATERIAL TOTAL	LABOR PER UNIT	LABOR TOTAL	TOTAL
1	[illegible]	[illegible]	EA	[illegible]	[illegible]	$ 157,015	$ 8,240	$ 16,480	$ 173,496
2	[illegible]	D[illegible]	EA	[illegible]	[illegible]	$ -	$ 11,345	$ 22,689	$ 22,689
3	[illegible]	D[illegible]	LB	[illegible]	[illegible]	$ -	$ 22	$ 25,872	$ 25,872
4	E[illegible]	[illegible]	L[illegible]	[illegible]	[illegible]	$ 5,000	$ 2,500	$ 2,500	$ 7,500
5	E[illegible]	A[illegible]	H[illegible]	[illegible]	[illegible]	$ -	[illegible]	$ 840	$ 840
6	E[illegible]	C[illegible]	H[illegible]	[illegible]	[illegible]	$ -	[illegible]	$ 1,680	$ 1,680
								Sub-Total	$ 232,077
								O&P 10%	$ 23,208
								CONTINGENCY 10%	$ 25,528
								ASBESTOS ABATEMENT	$ -
								ASBESTOS CONTINGENCY 0%	$ -
								PAYMENT & PERFORMANCE BOND 0%	$ -
								IC FEE 0%	$ -
								INTEREST DURING CONSTRUCTION 3%	$ 8,424
								DESIGN AND CM 20%	$ 57,847.53
								Other ( ) 0%	$ -
								Total	**$ 347,100**

ECM-7: Low Flow Fixtures

N/N	SOURCE LINE ITEM	DESCRIPTION OF WORK	UNIT	QTY	MATERIAL PER UNIT	MATERIAL TOTAL	LABOR PER UNIT	LABOR TOTAL	TOTAL
1	https://www.supply.com/toto-porcelain-125-gpf-urinal-ut105u-01-cotton-white/p211519	Replace urinals with 0.125GPF	per urinal	8	$ 144	$ 1,156	$ 65	$ 523	$ 1,679
2	https://www.sustainablesupply.com/Sloan-Faucet-Sensor-3-8-In-Compresion-05-gpm-SF2350-C1913160	Replace bathroom faucets with 0.5 GPM faucets	per faucet	50	$ 377	$ 18,863	$ 11	$ 545	$ 19,407
								Sub-Total	$ 21,086
								O&P 10%	$ 2,109
								CONTINGENCY 10%	$ 2,319
								ASBESTOS ABATEMENT	$ -

ROCK GAP
Energy Services

ASBESTOS CONTINGENCY	0%	$ -
PAYMENT & PERFORMANCE BOND	0%	$ -
IC FEE	0%	$ -
INTEREST DURING CONSTRUCTION	3%	$ 765
DESIGN AND CM	20%	$ 5,255.81
Other ( )	0%	$ -
Total		**$ 31,600**

ECM-8: Install Energy Star Appliances

N/N	SOURCE LINE ITEM	DESCRIPTION OF WORK	UNIT	QTY	MATERIAL PER UNIT	MATERIAL TOTAL	LABOR PER UNIT	LABOR TOTAL	TOTAL
1	webstaurantstore.com	Commercial Energy Star rated two door refrigerator, Traulsen G20010	EA	2	$ 4,240	$ 8,480	$ 76	$ 152	$ 8,632
2	https://www.homedepot.com/p/GE-17-5-cu-ft-Top-Freezer-Refrigerator-in-Stainless-Steel-with-ENERGY-STAR-GIE18GSHSS/205527022	Energy Star rated single door refrigerator, GE GIE18GSHSS	EA	5	$ 890	$ 4,451	$ 76	$ 380	$ 4,830
3	webstaurantstore.com	Commerical Energy Star rated single door freezer, Trausen G12010	EA	1	$ 3,970	$ 3,970	$ 76	$ 76	$ 4,046
4					$ -	$ -	$ -	$ -	$ -
								Sub-Total	$ 17,508
								O&P 10%	$ 1,751
								CONTINGENCY 10%	$ 1,926
								ASBESTOS ABATEMENT	$ -
								ASBESTOS CONTINGENCY 0%	$ -
								PAYMENT & PERFORMANCE BOND 0%	$ -
								IC FEE 0%	$ -
								INTEREST DURING CONSTRUCTION 0%	$ -
								DESIGN AND CM 0%	$ -
								Other ( ) 0%	$ -
								Total	**$ 21,200**

ECM-9: DHW Heater Upgrade

N/N	SOURCE LINE ITEM	DESCRIPTION OF WORK	UNIT	QTY	MATERIAL PER UNIT	MATERIAL TOTAL	LABOR PER UNIT	LABOR TOTAL	TOTAL
1	E[redacted]	Replace existing DHW heaters with new condensing boilers. Includes de	MBH (blr capacity)	360	$ 66	$ 23,834		$ -	$ 23,834
2						$ -	$ -	$ -	$ -
3						$ -	$ -	$ -	$ -
4						$ -	$ -	$ -	$ -
								Sub-Total	$ 23,834
								O&P 10%	$ 2,383
								CONTINGENCY 10%	$ 2,622
								ASBESTOS ABATEMENT	$ -
								ASBESTOS CONTINGENCY 0%	$ -
								PAYMENT & PERFORMANCE BOND 0%	$ -
								IC FEE 0%	$ -
								INTEREST DURING CONSTRUCTION 3%	$ 865
								DESIGN AND CM 20%	$ 5,940.81
								Other ( ) 0%	$ -
								Total	**$ 35,700**

ECM [redacted] C[redacted]

Economic Summary

ECM[redacted]	
E[redacted]	
A[redacted] M[redacted] D[redacted]	
[redacted] G[redacted]	
E[redacted] C[redacted]	
E[redacted] I[redacted]	
[redacted]	
GHG E[redacted] M[redacted]	

[redacted] EC[redacted] [redacted] H[redacted] AC [redacted] D[redacted] EC[redacted]

AC D C[redacted]

D[redacted] EC[redacted] AC[redacted] EC[redacted]

AH[redacted] A[redacted] D[redacted]

D[redacted] EC[redacted] AC[redacted]

F[redacted] D[redacted]

AHUA and AHUB Economizer Operation

During [illegible] the AHUA and AHUB [illegible] [illegible] [illegible]

[illegible]

[illegible]

[illegible]

[illegible]

[illegible]

[illegible]

[illegible]

[illegible]

[illegible]

- [illegible]
- [illegible]
- [illegible]
- [illegible]

[illegible] F[illegible] CM [illegible]

[illegible] [illegible] [illegible] [illegible] [illegible] [illegible] [illegible] [illegible] [illegible]

- M[illegible] M[illegible]
- L[illegible] CM[illegible]
- C[illegible] [illegible] [illegible] CM[illegible] C[illegible] AC A[illegible] AH[illegible] B[illegible] AH[illegible] E[illegible] H[illegible] AC [illegible] [illegible] [illegible] [illegible] [illegible] [illegible] [illegible]

ECM [illegible] E[illegible] L[illegible]

Economic Summary

ECM[illegible]
E[illegible]
A[illegible] M[illegible] D[illegible]
[illegible] G[illegible]
E[illegible]
E[illegible]
[illegible]
M[illegible]

Existing Condition

E[illegible]

- F[illegible]
- F[illegible]
- E[illegible] CFL [illegible]
- [illegible] CFL [illegible]
- [illegible]
- E[illegible]
- [illegible]
- [illegible]
- [illegible] L[illegible]
- [illegible]

[illegible]

Recommendation

[illegible] LED [illegible] LED [illegible]

[illegible] E[illegible] L[illegible] [illegible] [illegible] [illegible]

E[illegible] F[illegible]	[illegible] [illegible] F[illegible] L[illegible]	[illegible] [illegible] F[illegible] L[illegible] [illegible]
[illegible] [illegible] [illegible] [illegible] [illegible] [illegible]	[illegible] [illegible] LED [illegible] [illegible] [illegible]	[illegible] F[illegible]
[illegible] [illegible] [illegible] [illegible] [illegible] [illegible]	[illegible] [illegible] LED [illegible] [illegible]	[illegible] F[illegible]
[illegible] [illegible] [illegible] [illegible] [illegible]	[illegible] [illegible] LED [illegible] [illegible] [illegible] [illegible]	[illegible] L[illegible] [illegible]
[illegible] [illegible] [illegible] [illegible] [illegible] [illegible]	[illegible] [illegible] LED [illegible] [illegible] [illegible] [illegible]	[illegible] L[illegible] [illegible]
[illegible] [illegible] [illegible] [illegible] [illegible] [illegible] [illegible]	[illegible] [illegible] LED [illegible] [illegible] [illegible] [illegible]	[illegible] L[illegible] [illegible]
[illegible] [illegible] CFL [illegible] [illegible] [illegible]	[illegible] [illegible] [illegible] [illegible] LED [illegible] [illegible] [illegible] [illegible] [illegible] [illegible] [illegible]	[illegible] L[illegible] [illegible]
[illegible] [illegible] [illegible] [illegible] [illegible] [illegible] [illegible] [illegible]	[illegible] [illegible] LED [illegible] [illegible] [illegible] [illegible]	[illegible] L[illegible] [illegible]
[illegible] C[illegible] [illegible] [illegible] [illegible]	[illegible] [illegible] [illegible] [illegible] LED [illegible] [illegible]	[illegible] L[illegible] [illegible]

F[illegible] [illegible] E[illegible] [illegible] [illegible] [illegible] [illegible] LED [illegible] [illegible]

[redacted]

[redacted]

[redacted]

[

[redacted]

E[redacted] F[redacted]	[redacted] [redacted] F[redacted] L[redacted]	[redacted] [redacted] F[redacted] L[redacted]
[redacted]	[redacted] LED [redacted]	F[redacted]
[redacted]	LED	F[redacted]
[redacted]	[redacted] LED [redacted]	L[redacted]
[redacted]	[redacted] LED [redacted]	L[redacted]
[redacted]	[redacted] LED [redacted]	L[redacted]
[redacted] CFL [redacted]	[redacted] LED [redacted]	L[redacted]
[redacted]	[redacted] LED [redacted]	L[redacted]
[redacted] C[redacted]	[redacted] LED [redacted]	L[redacted]

[redacted] M[redacted] M[redacted] H[redacted] F[redacted] E[redacted] L[redacted]

[redacted] MH LED LED LED LED

H[redacted] F[redacted] E[redacted] B[redacted] F[redacted]

[redacted] LED LED LED

I[redacted] M[redacted] H[redacted] L[redacted] E[redacted] B[redacted] F[redacted]

[redacted] LED LED B[redacted]

H[redacted] B[redacted] L[redacted] E[redacted] B[redacted]

[redacted] LED B[redacted] LED

M[redacted] H[redacted] L[redacted] I[redacted]

[redacted] LED B[redacted] LED

[illegible] [illegible] [illegible] D[illegible] [illegible]CFL L[illegible] [illegible] [illegible]E[illegible] B[illegible] F[illegible] [illegible]

[illegible] E[illegible] [illegible] [illegible] [

[redacted] [redacted]

[redacted]

[redacted]

[redacted]

[redacted]

[illegible] D[illegible] C[illegible]

LED Wall Pack

DIMENSIONS

APPLICATION

The ACLW family of LED wall packs combine high-performance LEDs, highly-engineered optics to traditional designs to bring you the most advanced line of wall packs on the market. Multiple lumen packages mean there is an ACLW that is just right for your lighting needs. The ACLW wall packs were designed and engineered as maintenance free, energy-efficient alternatives to traditional fluorescent, high pressure sodium and H.I.D. light sources. This fixture can be wall mounted as a wall pack, or it can be adapted to a flood fixture with the use of a Knuckle or Yoke Flood kit "

FEATURES

- Sturdy, weather-resistant bronze aluminum housing.
- Direct replacement of fluorescent Long life, 60,000 hour LEDs at L80 reduce lift cycle maintenance costs
- Optional On/Off or Bi Level Motion Sensor, High voltage transformers, emergency battery backups, cords and whips

CONSTRUCTION

Rugged die cast aluminium housing withstands outdoor environments. Outer surface treated with durable power coating to provide resistant to corrosion,rust, weathering, and or degradation. Performance engineer internal heat dissipation fins provide superior thermal management for lens life and reliability.

MOUNTING

Luminaire mounting designed for standard J-Box. Features multiple conduit entries.

ELECTRICAL

Equipped standard with fixed output driver. Long-Life LED's 60,000 hours at L80 with projected life over 100,000 hours for reduced life cycle maintenance costs.

CERTIFICATION

All luminaires are built to UL 1598 and 2108 standards, and bear appropriate ETL labels. Wet location labeling is standard. Emergency equipped fixtures labeled UL924. Adheres to LM70, LM80, and TM21 industry standards. Design Lights Consortium (DLC) qualified product. Not all models of this product maybe DLC qualified. Please check the DLC Product List.

WARRANTY

5-year limited warranty. See complete warranty for terms and exclusions. (Labor not included).

ORDERING INFORMATION

Example Model Number: ACLW-30-MV-850

ACLW	30	MV	850
SERIES	RATED WATTAGE	DRIVER TYPE	CRI AND KELVIN
	30-30W (2827 Lumens)[1,2] **60**-60W (7146 Lumens)[2] **80**-80W (8887 Lumens)[2]	**MV**- 120-277V	**850**- 80 CRI; 5000 Kelvin

Notes:
[1]Made to order items. Minimum 90 day lead time. Minimum 500 order quantity.
[2]DLC Listed
[3]DLC Premium Listed
[4]Quick ship: XK. Other CCTs may require lead time or special orders.
[5]Typical color consistency may vary or be changed

HID LED 54W TITANIUM LED SERIES

GREENCREATIVE

PRO

54W REPLACES

175-250W HID

70% Energy Savings

- **Direct line voltage 120-277V - Not compatible with ballasts**
- **Designed for use in post top applications**
- **Compatible with EX39 & E39 sockets**
- **Fully omnidirectional 320° beam angle**
- **Available in 3000K, 4000K & 5000K CCT**
- **Suitable for use in totally enclosed fixtures**

ETL CLASSIFIED Intertek Intertek FC

50,000 H

120-277V UNIVERSAL

OMNI DIRECTIONAL

5 YR WARRANTY

82 CRI (Ra)

ENCLOSED*

HID LED PRODUCT FEATURES

Suitable for Enclosed Fixtures

This HID LED lamp replaces a 175-250W HID and is suitable for use in totally enclosed fixtures. Its high lumen output and exceptional efficacy make it an ideal choice for outdoor post top applications.

CoolSink Technology

The CoolSink passive cooling system allows air to flow freely through the lamp. This unique design uses an increased cooling surface area to reduce the operating temperature of the LED and power supply, thus resulting in longer lamp life and lumen maintenance.

HID LED 54W TITANIUM LED SERIES

GREENCREATIVE

APPLICATIONS

General Lighting

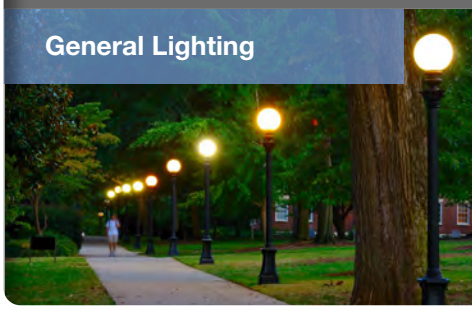

Teardrop Lighting

Post Top Lighting

Ref.#: DS279-HID-LED-54W-277V-EX39-040618

SPECIFICATIONS

Product Model	98090 54HID/830/277V/EX39	98091 54HID/840/277V/EX39	98092 54HID/850/277V/EX39
Type	HID LED	HID LED	HID LED
Base	EX39 (Compatible with E39)	EX39 (Compatible with E39)	EX39 (Compatible with E39)
Power (W)	54	54	54
Voltage - Frequency	120-277V	120-277V	120-277V
Color Temp. (ANSI)	Warm White 3000K	Cool White 4000K	Daylight 5000K
CRI (Ra) (typ.)	82	82	82
Bare Lamp lumens (lm)	7000	7550	7550
Bare Lamp efficacy (LPW)	130	140	140
Fixture Lumens (lm)**	5300	5400	5400
Fixture Efficacy (LPW)**	98	100	100
Beam Angle	320°	320°	320°
Dimmable	No	No	No
Power Factor	0.9	0.9	0.9
Rated Lifetime - L70 (hrs.)	50,000	50,000	50,000
Temperature Rating	-4°F/-20°C - 95°F/35°C	-4°F/-20°C - 95°F/35°C	-4°F/-20°C - 95°F/35°C
Dia. x MOL	3.86"x8.27"(99x210mm)	3.86"x8.27"(99x210mm)	3.86"x8.27"(99x210mm)
Weight (lb. / g)	2.02lbs / 918g	2.02lbs / 918g	2.02lbs / 918g

* Suitable for use in totally enclosed fixtures
** Fixture lumens and efficacy based on testing in approved luminaire
*** Suitable for damp locations. Not for use where directly exposed to weather or water
**** Not suitable for use in horizontal applications

LED T5 | DIRECT REPLACEMENT

Product Features

- Easy Plug-and-Play Installation - No Rewiring Required
- Operates with Electronic Ballasts[1]
- Identical Look to Standard Fluorescent Lamp
- Full Glass Lens with 240 Degree Light Distribution
- High Efficacy with 50% Energy Savings
- DLC QPL Listed
- UL Listed for Direct Fuorescent Lamp Replacement
- 5-Year Warranty
- ETL Sanitation Listed for Food Service Applications

$90 Total Life Savings[3]

Applications

- Office Buildings/Schools
- Warehouse
- Manufacturing Facilities
- Parking Garages

Model Number[2]	Lamp Type	Base	Watts / Replaced	Lumens	CCT	MOL	Distribution	Certification	Warranty
LBT5F16xx	Plug-n-Play	G5	13W / 28W	1650 lm	3500K 4100K 5000K	45.8”	240°	UL	5-Years
LBT5F33xx	Plug-n-Play	G5	31W / 54W	3300 lm	3500K 4100K 5000K	45.8”	240°	UL/DLC	5-Years

NOTE 1: Please reference our Ballast Compatibility List
NOTE 2: Replace xx with 35 for 3500K, 41 for 4100K, and 50 for 5000K Color Temperature
NOTE 3: Savings calculated by 50,000 hour Lifetime, Electricity rated $0.12, and 3 Operating Hours Per Day.

8W LED Retrofit Lamp

Order Code: LP15229

Description

Venture Lighting's LED Retrofit lamps are the ideal upgrade solution to traditional HID lamp technologies. Venture's LED Retrofit lamps are a simple energy saving solution for providing significant maintenance savings. The integrated driver design is an ideal upgrade from traditional technologies.

Features & Benefits

- Replaces MH or HPS up to 50W*
- Replaces CFL up to 23W*
- 5 year warranty
- Universal burn position
- Easy installation
- Reduced maintenance costs
- **Note: It is the customer's responsibility to verify that the lamp compartment meets the minimum required lamp compartment dimension of 6 " diameter by 8.5" long.*

Applications

- Post top
- Wall pack
- Area Lighting
- Flood lighting
- Garage lighting
- General illumination

Notes

- The use of an external surge protection device is recommended.
- Operating temp. range between -40°F and 122°F (-40°C and 50°C).
- Suitable for use in dry and damp environments.
- Suitable for use in portable, surface mounted and ceiling luminaires.
- Suitable for use in open and enclosed luminaires with minimum lamp compartment dimensions of 6 inch diameter x 8.5 inch deep.
- Do not use where exposed to water or outdoors without an appropriate enclosed luminaire.
- Lamps have clear polycarbonate cover lenses

Product Performance

Input Power (W)	8
Initial Lumens	960
Lumens/Watt	120
Correlated Color Temperature (CCT)	4000K
Color Rendering Index (CRI)	80
Life Hours	50000
Minimum Lamp Compartment Size	6" Dia by 8.5" long
Dimming	No
Operating Temperature Range	-40°F to 122°F (-40°C to 50°C)

Physical Characteristics

Base Type	Medium, (E26)
Overall Length A	4.84" (123mm)
Diameter B	2.36" (60mm)
Weight	0.49 lbs (220 g)

Electrical Characteristics

Input Voltage Range	100V-277V; 50/60Hz
Driver	Internal within lamp
Power Factor	>0.90
THD	<20%

Regulatory Qualifications

cULus Listed

Accessories

SP12714 – 120-277V Surge Protector

c UL us LISTED

VENTURE LIGHTING

2451 Enterprise Parkway East, Twinsburg, Ohio 44087 | Tel: 800-451-2606 | Fax: 800-451-2605 | www.venturelighting.com

Venture 8W LED Retrofit Lamp

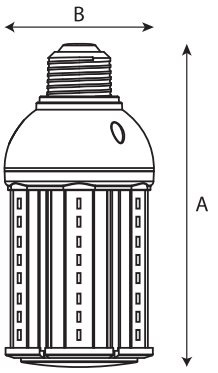

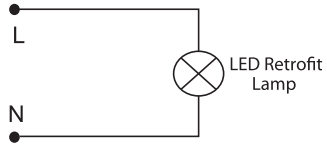

Easy to install - bypass ballast and provide voltage directly to lamp

(800) 451-2606
Fax: (800) 451-2605
2451 Enterprise Parkway East
Twinsburg, Ohio 44087 USA
E-mail: venture@adlt.com
VentureLighting.com

© 2018 Venture Lighting International Venture Lighting is a registered trademark of Venture Lighting International.

LUNERA CFL LED GEN4

LED Replacement for 2-pin GX23 PLs

Description

The LUNERA CFL LED GX23 Gen 4 from Lunera is a plug-and-play LED replacement for CFL applications such as downlights, sconces and other fixtures using the 13W GX23 socket. The Lunera CFL LED GX23 supports both Ballast Driven (plug-and-play) and Line Driven operation at 120V-277V 50/60Hz.

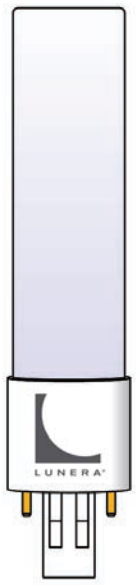

These beautiful lamps have a Color Rendering Index of 82 and deliver 500+ lumens of usable light. The Lunera CFL LED GX23 is available in 2700K, 3000K, 3500K, and 4000K color temperatures.

The long lifespan of the Lunera CFL LED GX23 is rated at 50,000 hours, five times longer than CFLs and is supported by a five year warranty.

The Lunera CFL LED GX23 offers 60%+ energy savings and is compatible with 13W GX23 magnetic ballasts and 120V-277V 50/60Hz ballast bypass operation.

Features

- Directly replaces 13W GX23 CFL lamp (2-pin)
- Supports both plug-and-play Ballast Driven installation and Line Driven (ballast bypass) installation at 120V/277V
- Delivers 500+ lumens of usable light
- >80 CRI
- CCT 2700K, 3000K, 3500K and 4000K
- 50,000 hr life to L70
- 5-Year Warranty

Ordering Information

Example: HN-H-GX23-U-5W-830-G4

Series	Version	Socket Type	Power Supply	Lamp Wattage Replaced	CCT	Generation
HN Lunera CFL LED	**H** Horizontal, Universal Support for Ballast and 120V/277V operation	**GX23** Fixture with GX23 Socket	**U** Universal Lamp Supports GX23 Magnetic Ballast and 100V~305V	**5W** Replaces 13W GX23 CFL Lamp	**827** 2700 Kelvin **830** 3000 Kelvin **835** 3500 Kelvin **840** 4000 Kelvin	**G4** 4th Generation

LUNERA CFL LED GX23

Product Specifications

Illumination

Color Temperatures		2700K, 3000K, 3500K, 4000K
Delivered Lumens:	@2700K @3000K @3500K @4000K	528lm 505lm 575lm 580lm
CRI		>80
Color Consistency		Lunera TruColor Proprietary Process
Lumen Maintenance (L70)		50,000+ hours life

Electrical System

Power Factor	> 90%
Total Harmonic Distortion	< 20%
Input Voltage	UNIVERSAL: Lamp can be driven by magnetic GX23 ballast or the ballast can be bypassed and the lamp driven directly by 100V-305V 50/60Hz AC line voltage
Surge Protection	Complies with ENERGY STAR LED lamp transient protection (7 strikes of a 2.5kV 100kHz ring wave)
Average Lamp Power	5W
Total Power (Lamp + Ballast)	5W + 0.2W for ballast
Lamp Wattage Replaced	13W + 3W for ballast
Dimming	If supported by ballast or via TRIAC dimmer on 120V AC, contact Lunera for list of compatible dimmers.

Physical

Weight	0.1 lbs
Housing and Finish	Thermoplastic, White
Optics	Optical Acrylic Diffusion

Environment

Ambient Operating Temp	-40°F to 100°F (-40°C to 40°C)
Ambient Operating Humidity	Dry and Damp Certified
Max Heat Sink Temp	221°F (105°C)

Installation

Socket Type (magnetic or line)	GX23 series 2-Pin CFL socket

Certifications & Qualifications

UL	Listed (UL1993) & Classified (UL1598-C)
RoHS Compliant	Contains no lead or mercury
LM79, LM80, IES Files	Available

Warranty

Warranty	5 years

Application Notes

The Lunera CFL LED may be used in open or fully enclosed fixtures. Indoors or outdoors.

CAUTION - IF THE LAMP OR LUMINAIRE EXHIBITS UNDESIRABLE OPERATION (BUZZING, FLICKERING, ETC.), IMMEDIATELY TURN OFF POWER, REMOVE LAMP FROM LUMINAIRE AND CONTACT MANUFACTURER.

© 2016 Lunera Lighting, Inc. All Rights Reserved. Lunera and the Lunera logo are registered trademarks of Lunera Lighting, Inc. All other trademarks are the property of their respective owners. Specifications are subject to change without notice. This document is for informational purposes only.

Photometry

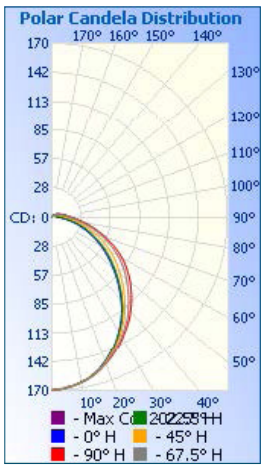

Dimensions

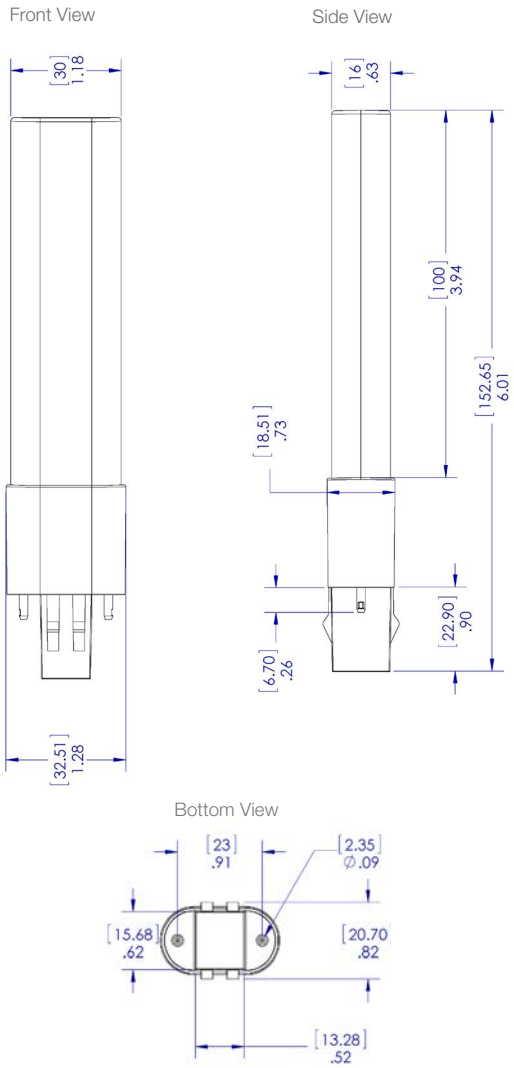

Sold by: LEDLightExpert.com
800-674-9420
sales@LEDLightExpert.com

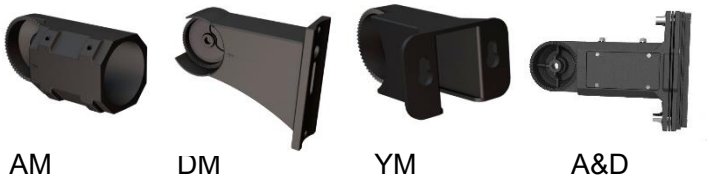

AM DM YM A&D

P/N：RG-NextGen-2--S-G07-150_WCT3A1-abcdef

Note：

The letter "a" can be can be 2 letters represent lamp colors; “BH = Black、WH=White、BR=Brown or Customized”

The letter "b" can be "P" or blank to represent Photocell or None Photocell;

The letter "c" can be "S" or blank to represent Surge protector or None Surge protector;

The letter "d" can be "M" or None, represent Motion sensor or No Motion sensor.

The letter "e" can be "AM","DM","YM","A&D" represent bracket type.

The letter "f"can be any two-digit number to represent CCT. ”40=4000k、45=4500k、50=5000k、57=5700k”

DIMENSIONS

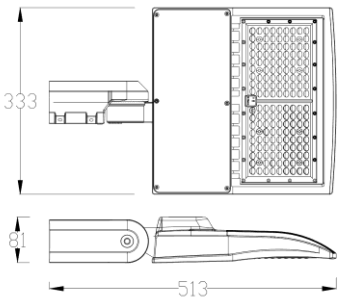

AM

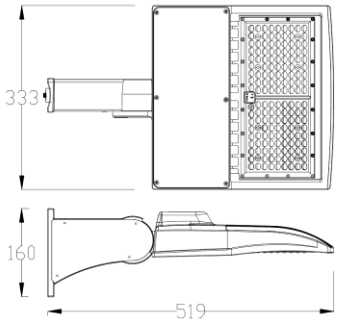

DM

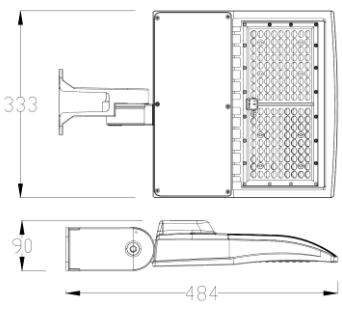

YM

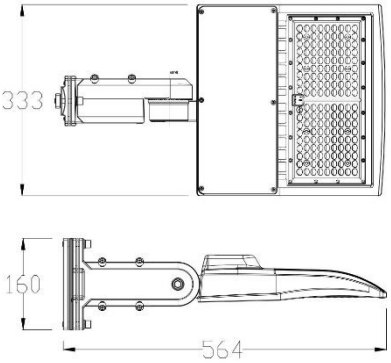

A&D

ADVANTAGE

- UL cUL DLC Premium certificate.
- Seoul /Lumileds Chip, high CRI.
- IP65 driver, input voltage 100-277VAC.
- Output constant current lever can be adjusted through output cable with 1-10V.
- No UV or IR in the beam.
- Easy to install and operate.
- Energy saving, long lifespan.
- Light is soft and uniform, safe to eyes.
- Instant start, NO flickering, NO humming.
- Green and eco-friendly without mercury.
-

APPLICATION

- Outdoor basketball court, tennis court.
- Badminton court, the football field.
- The school playground, stadium.
- Community leisure entertainment plaza, road lamp etc.

SPECIFICATIONS

OPTICAL	Input Power	150W
	Lumen	19500-21000LM
	Lumen Efficacy	125-140 LM/W
	Color Temperature	4000K, 4500K, 5000K, 5700K
	CRI	>70
	Viewing Angle	150*85 Degree（Type Ⅲ）
ELECTRICAL	Input Voltage	100-277VAC 50/60Hz (480vac available to order)
	PF	≥0.9
	THD	≤20%
	Driver Model	Meanwell HLG-150H-48B (1-10Vdc Dimmer)
	Optional Accessory	Photocell / Surge protector/ Motion sensor
MATERIALS	LED Brand	SEOUL / LUMILEDS
	LED Type	SMD3030
	LED QTY	308 PCS
	Housing	Aluminum Alloy
	Housing Color	Black / Brown/ white /
	Waterproof Rating	WET（IP65）
OTHERS	Operating Temperature	-20℃ TO 40℃
	Operating Humidity	20％-90％ RH
	Storage Temperature	-30℃ TO 80℃
	Storage Humidity	10％-95％ RH
	Warranty Time	5 Years

DLC Premium Rated – A Tougher Certification

Not an initial light spike! DLC Premium requires 90% Light Maintenance for over 36,000 Hours, Dark Sky Compliance and Additional Performance Criteria Demands!

Model# RG-NextGen-2-S-G07-150WCT3B1-a[P;blank][S;blank][M;blank]e57

Manufacturer: RuggedGrade
Brand: RuggedGrade
Technical Requirements Version: 4.3
Date Qualified: 05/16/2018
Product ID: PLEC6X5OS45Z

Categorization

Main: Outdoor Luminaires
General Application: High Output
Primary Use: Architectural Flood and Spot Luminaires
Classification: Premium
Is Parent Product: No
DLC Family Code: NANOUI
Listing Status: Listed

Reported Data | Zonal Lumens | Spacing Criteria | Product Features | Version History | Family Data

Light Output: 20050 lm
Wattage: 155.68 W
Efficacy: 128.79 lm/W
Power Factor: 0.9
CCT: 5700 K
CRI: 70
Total Harmonic Distortion: 15 %

LIGHT DISTRIBUTION TESTING PARAMETERS

Luminaire Property

Luminaire Manufacturer:
Voltage: 199.5 V
Current: 0.7751 A
Power: 152.47 W
Power Factor: 0.9836

Photometric Results

IES Classification: Type III
Longitudinal Classification: Medium
Total Rated Lamp Lumens: 19179.2 lm
Measurement Flux: 19179.2 lm
Efficiency: 100%
Downward Ratio: 100%
Upward Ratio: 0%
Luminaire Efficacy Rating (LER): 125.79
Central Intensity: 4647.29 cd
Max. Intensity: 6975.57 cd
Pos of Max. Intensity: H22.5 V69

Luminous Intensity Distribution Curve

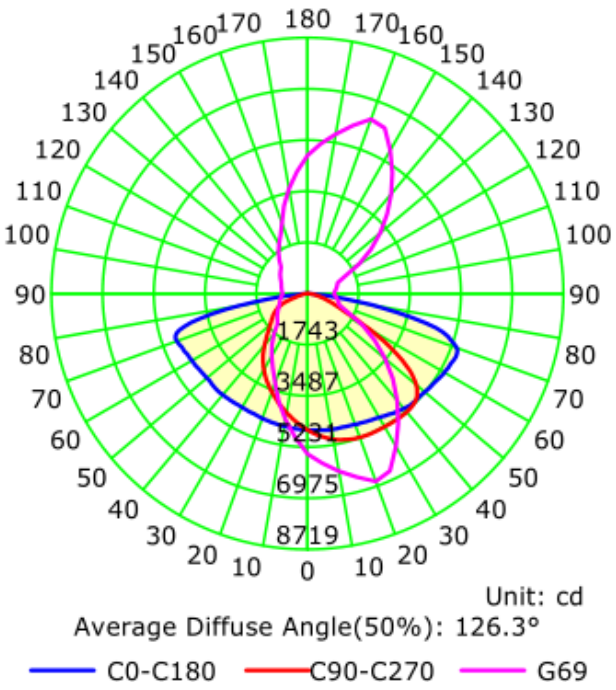

Average Diffuse Angle(50%): 126.3°

C0-C180 C90-C270 G69

The Average Illuminance Effective Figure

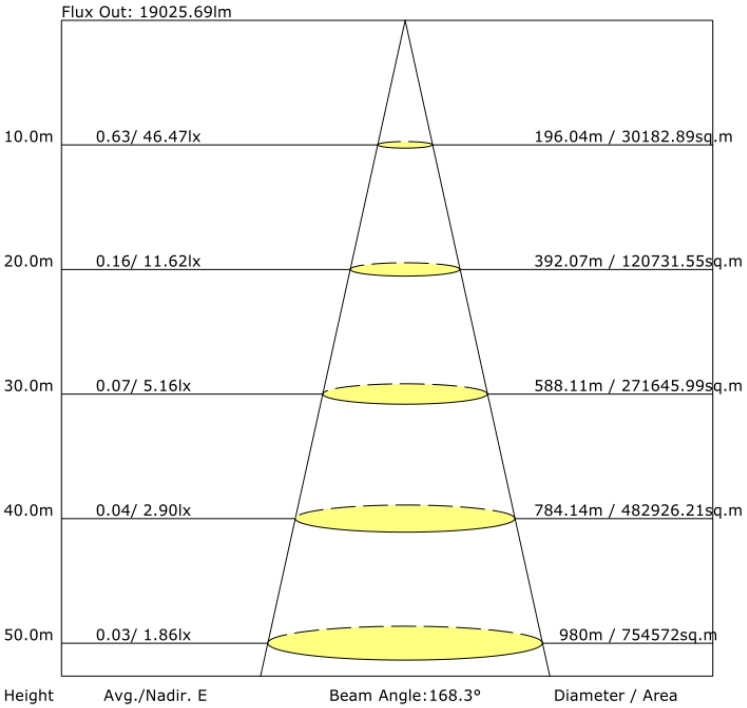

PACKAGE

Stent Type	Lamp Net Weight	Size	Qty / Carton	Gross Weight / Carton
AM	5.4KG	585*385*160 MM	1 PC	6.3KG
DM	5.9KG	585*385*160 MM	1 PC	6.8 KG
YM	5.1 KG	585*385*160 MM	1 PC	6KG
A&D	6.3KG	585*385*160 MM	1 PC	7.2 KG

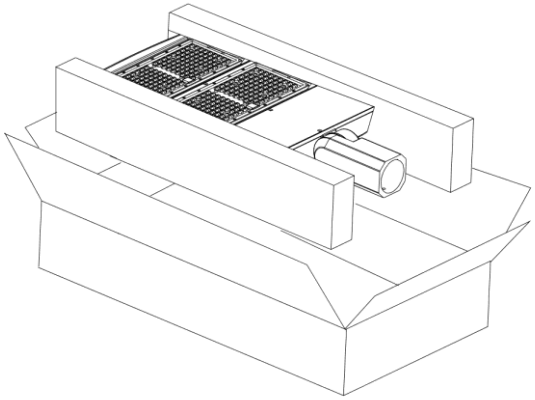

150 Watt NextGen II with Slip Fit

Arm Mount is 22 Inch / 564mm Long and Yoke Mount is 19 inch 484mm Long

NOTICE FOR USER

- Please turn off power before install or change assembly parts.
- The input voltage and lamps should be matched, after connecting the power line, Please make sure the wiring section is insulated.
- No-professionals, must not install and disassemble the lamps.

TROUBLE SHOOTINGS

Troubles	Check points
Flickering of the light	Turn off the power and turn on again in 3 minutes. If same phenomena occur, then call agencies.
Out of working	Please check the connection.

S29850

9WPLH/LED/830/DR/4P
9W LED PL 4-Pin; 3000K; 950 Lumens; G24q base; 50000 Average rated hours; 120 Deg. beam spread

S29850

Features
- Replaces 26, 32, and 42 watt CFLs
- Direct Replacement - for use with Electronic, Instant Start, Rapid Start, and Programmed Start ballasts with no rewiring required. Ballast required.
- Instant on to full brightness / no flickering
- Horizontal operation
- Up to 70% energy saving
- Long life - 50,000 hours
- 5 year warranty

*Ballast required (See Ballast Compatibility Chart)

Item Number	UPC	Watts	Fluorescent Equivalent	Lamp Shape	Base	Lamp Code	Dimmable/Non-Dimmable
S29850	045923298509	9	26, 32, and 42 watt CFL	PL	G24q	9WPLH/LED/830/DR/4P	Non-Dimmable

Finish	MOL In Inches	MOD In Inches	Initial Lumens	Average Rated Hours	Kelvin Temp	Color	CRI
Frost	6-5/8"	1-3/32"	950	50000	3000	Soft White	82

Beam Spread Deg	Operating Temperature	Package Type	CEC Status	DLC ID:	RoHS Compliant	UL or ETL Listed	UL Classification
120	-20C (-4F) to a maximum of +45C (+113F)	Box	Lawful for sale in California	PLJAGBSSPJZJ DLC Search	Yes	Yes	cULus Classified - Damp Location Rated

Warranty
5 Year Limited

CL | A/C (BALLAST OVERRIDE)

CL-18W

CL-36W

CL-45W

TECHNICAL SPECIFICATIONS:

:: Input voltage: 120~277V AC
:: CCT: 3000K and 5000K
:: CRI: 84
:: Lamp base: E26 medium base
(mogul base adaptors optional)
:: Chip: Samsung LED chips with Rubycon driver
:: Beam angle: 360°
:: Operating Temp: 4°F~149°F

APPLICATIONS:

:: Ideal for retrofitting existing HID highbay, shoebox, flood light or wall pack fixtures
:: Can be used in enclosed luminaires

UL LISTED (Except 18W)

DLC PREMIUM

DAMP location

Rated for enclosed fixtures

360° beam

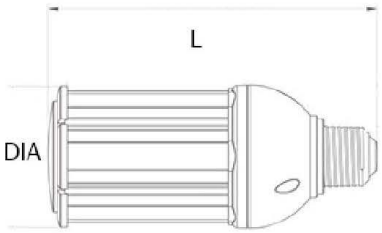

LED CORN LAMPS

CATALOG NO.	WATTS	BASE	LUMENS	COLOR TEMP	REPLACEMENT RANGE	DIMENSIONS
CL-18W-50K-E26	18W	E26	2450LM	5000K	50~100 MH	6-1/2" (L) x 2-3/4" (Dia)
CL-18W-30K-E26	18W	E26	2304LM	3000K	50~100 MH	
CL-36W-50K-E39	36W	E39	4788LM	5000K	70~150 MH	9-1/4" (L) x 3-3/4" (Dia)
CL-36W-30K-E39	36W	E39	4456LM	3000K	70~150 MH	
CL-45W-50K-E39	45W	E39	5985LM	5000K	100~175 MH	9-1/4" (L) x 3-3/4" (Dia)
CL-45W-30K-E39	45W	E39	5580LM	3000K	100~175 MH	

E26 MEDIUM BASE — ENLARGES E26 BULB TO BE USED IN E39 SOCKET

ECM [illegible] Lighting [illegible]

Economic Summary

ECM [illegible]	
[illegible]	[illegible]
[illegible]	[illegible]
[illegible]	[illegible]
[illegible]	[illegible]
[illegible]	[illegible]
[illegible]	[illegible]
[illegible]	[illegible]

Existing Condition

[illegible]

- [illegible]
- [illegible]
- [illegible] CFL
- [illegible]
- [illegible]
- [illegible]
- [illegible]
- [illegible]

[illegible] LED [illegible]

[illegible]

Recommendation

[redacted] EXC[redacted] [redacted] LED [redacted]

L[redacted] LED [redacted]

L[redacted] LED [redacted]

[redacted] ECM [redacted] LED [redacted] LED [redacted]

[redacted]C[redacted]E[redacted]F[redacted]K

[redacted] G[redacted]

[redacted]

[redacted] B[redacted]

[redacted] C[redacted]

[redacted] B[redacted]

[redacted] D[redacted]

[redacted]

[redacted]

[redacted]

[redacted]

[redacted] C[redacted]

[redacted]

[redacted] M[redacted] F[redacted]

[redacted] L[redacted] F[redacted]

[redacted] A[redacted] C[redacted] C[redacted] M[redacted]

[redacted] C[redacted]

[redacted]

Fixture	Quantity of new Lamps
[redacted] F[redacted] LED [redacted]	[redacted]
[redacted] F[redacted] LED [redacted]	[redacted]
[redacted] CFL F[redacted] LED [redacted]	[redacted]
[redacted] H[redacted] F[redacted] LED [redacted]	[redacted]
[redacted] H[redacted] F[redacted] LED [redacted]	[redacted]
[redacted] H[redacted] F[redacted] LED [redacted]	[redacted]
[redacted] CFL F[redacted] LED [redacted]	[redacted]
[redacted] CFL F[redacted] LED [redacted]	[redacted]

[redacted] F[redacted]

[redacted]

[redacted]

			Existing				Proposed				
Floor	Room Number	Space Type	Lamp Type	# of Fixtures	Lamps / Fixture	Watts / Lamp	Lamp Type	# of Fixtures	Lamps / Fixture	Watts / Lamp	Total New Lamps
1 - West	1001 Security and Gallery	Hallway	L4, 14, 16- 32W TRT	13	1	35	4 Tube CFL Repl	13	1	9	13
1 - West	1001 Security and Gallery	Hallway	L28 - 4' T5	20	2	30	4' T5 LED	20	2	13	40
1 - West	All offices with L1	Office	L1, 17, 10, 22 - 4' T5	41	2	30	4' T5 LED	41	2	13	82
1 - West	Conference with L1	Conference	L1, 17, 10, 22 - 4' T5	17	2	30	4' T5 LED	17	2	13	34
1 - West	Restrooms	Bathroom	L4, 14, 16- 32W TRT	30	1	35	4 Tube CFL Repl	30	1	9	30
1 - West	Office L3	Office	L3, L20 - 4' T5	6	2	30	4' T5 LED	6	2	13	12
1 - West	Storage L3	Storage	L3, L20 - 4' T5	9	2	30	4' T5 LED	9	2	13	18
1 - West	Conference with L2	Conference	L2 - 2' T5	4	2	17.5	2' T5 LED	4	2	8	8
1 - West	Hallways	Hallway	L2 - 2' T5	43	2	17.5	2' T5 LED	43	2	8	86
1 - West	Pretrial	Office	L29 - 2' T5HO	27	3	28	2' T5 LEDHO	27	3	12	81
1 - West	Secure Hall	Hallway	L9, 13, 11 - 4' T5	8	3	30	4' T5 LED	8	3	13	24
1 - West	Hallways	Hallway	L4, 14, 16- 32W TRT	3	1	35	4 Tube CFL Repl	3	1	9	3
1 - West	Closets	Storage	L6, 26 - 4' T5	6	2	30	4' T5 LED	6	2	13	12
1 - West	Toilets	Bathroom	L5 - 3' T5HO	6	1	28	3' T5 LEDHO	6	1	16	6
1 - West	Restrooms	Bathroom	L8 - 6' T5HO	4	2	45	3' T5 LEDHO	4	2	16	8
1 - West	Offices	Office	L7, F1- 32W TRT	4	1	35	4 Tube CFL Repl	4	1	9	4
1 - West	Courtroom	Office	L30	20	2	60	4 pin LED Repl	20	2	30	40
1 - West	Courtroom	Office	L31 - 4' T5HO	6	2	57.5	4' T5 LEDHO	6	2	24	12
1 - West	Courtroom	Office	L32 - 2' T5HO	2	2	30	2' T5 LEDHO	2	2	12	4
1 - West	Courtroom	Office	L33	8	1	60	4 pin LED Repl	8	1	30	8
1 - West	Courtroom	Office	L34	4	2	30	4 pin LED Repl 26weql	4	2	10	8
1-Classroom Bldg	Classroom	Office	L9, 13, 11 - 4' T5	37	3	30	4' T5 LED	37	3	13	111
1-Classroom Bldg	Toilets	Bathroom	L1, 17, 10, 22 - 4' T5	3	2	30	4' T5 LED	3	2	13	6
1-Classroom Bldg	Storage	Storage	L6, 26 - 4' T5	2	2	30	4' T5 LED	2	2	13	4
1-Police	Office	Police Office	L1, 17, 10, 22 - 4' T5	78	2	30	4' T5 LED	78	2	13	156
1-Police	Conf	Conference	L1, 17, 10, 22 - 4' T5	13	2	30	4' T5 LED	13	2	13	26
1-Police	Evidence Storage	Active Storage	L12 - 4' T5	23	4	30	4' T5 LED	23	4	13	92
1-Police	Evidence Storage	Active Storage	L3, L20 - 4' T5	20	2	30	4' T5 LED	20	2	13	40
1-Police	Evidence Storage	Active Storage	L1, 17, 10, 22 - 4' T5	7	2	30	4' T5 LED	7	2	13	14
1-Police	Corridors	Hallway	L2 - 2' T5	65	2	17.5	2' T5 LED	65	2	8	130
1-Police	Corridors	Hallway	L7, F1- 32W TRT	13	1	35	4 Tube CFL Repl	13	1	9	13
1-Police	Restrooms	Bathroom	L4, 14, 16- 32W TRT	24	1	35	4 Tube CFL Repl	24	1	9	24
1-Police	Restrooms	Bathroom	L5 - 3' T5HO	4	1	28	3' T5 LEDHO	4	1	16	4
1-Police	Restrooms	Bathroom	L8 - 6' T5HO	2	2	45	3' T5 LEDHO	2	2	16	4
1-Police	Closets	Storage	L6, 26 - 4' T5	11	2	30	4' T5 LED	11	2	13	22
1-Police	Holding Cells	Conference	L9, 13, 11 - 4' T5	65	3	30	4' T5 LED	65	3	13	195
1-Police	Control Room	Conference	L4, 14, 16- 32W TRT	12	1	35	4 Tube CFL Repl	12	1	9	12
1-Police	Closets	Storage	L1, 17, 10, 22 - 4' T5	5	2	30	4' T5 LED	5	2	13	10
1-Police	Kitchen	Conference	L9, 13, 11 - 4' T5	7	3	30	4' T5 LED	7	3	13	21
2-Police	Private Offices	Police Office	L1, 17, 10, 22 - 4' T5	68	2	30	4' T5 LED	68	2	13	136
2-Police	Open Office	Police Office	L1, 17, 10, 22 - 4' T5	30	2	30	4' T5 LED	30	2	13	60
2-Police	Conference Rooms	Conference	L1, 17, 10, 22 - 4' T5	29	2	30	4' T5 LED	29	2	13	58
2-Police	Hallways	Hallway	L1, 17, 10, 22 - 4' T5	27	2	30	4' T5 LED	27	2	13	54
2-Police	Records/Supplies	Active Storage	L3, L20 - 4' T5	19	2	30	4' T5 LED	19	2	13	38
2-Police	Storage	Storage	L1, 17, 10, 22 - 4' T5	6	2	30	4' T5 LED	6	2	13	12
2-Police	Hallways	Hallway	L2 - 2' T5	61	2	17.5	2' T5 LED	61	2	8	122
2-Police	conference	Conference	L7, F1- 32W TRT	14	1	35	4 Tube CFL Repl	14	1	9	14
2-Police	storage	Storage	L3, L20 - 4' T5	2	2	30	4' T5 LED	2	2	13	4
2-Police	Restrooms	Bathroom	L4, 14, 16- 32W TRT	40	1	35	4 Tube CFL Repl	40	1	9	40
2-Police	Restrooms	Bathroom	L8 - 6' T5HO	4	2	45	3' T5 LEDHO	4	2	16	8
2-Police	Restrooms	Bathroom	L5 - 3' T5HO	5	1	28	3' T5 LEDHO	5	1	16	5
2-Police	Showers	Bathroom	L4, 14, 16- 32W TRT	8	1	35	4 Tube CFL Repl	8	1	9	8
2-Police	Locker Rm	Bathroom	L6, 26 - 4' T5	13	2	30	4' T5 LED	13	2	13	26
2-Police	Closets	Storage	L6, 26 - 4' T5	5	2	30	4' T5 LED	5	2	13	10
2-Police	Storage	Storage	L1, 17, 10, 22 - 4' T5	4	2	30	4' T5 LED	4	2	13	8

			Existing				Proposed				
Floor	Room Number	Space Type	Lamp Type	# of Fixtures	Lamps / Fixture	Watts / Lamp	Lamp Type	# of Fixtures	Lamps / Fixture	Watts / Lamp	Total New Lamps
B-Firing Range	Hallways	Hallway	Existing LEDs	7	2	13	N/R	7	2	13	14
B-Firing Range	Hallways	Hallway	Existing LEDs	5	2	13	N/R	5	2	13	10
B-Firing Range	Storage	Storage	Existing LEDs	6	2	13	N/R	6	2	13	12
B-Firing Range	Storage	Storage	Existing LEDs	4	2	13	N/R	4	2	13	8
B-Firing Range	Range Master	Police Office	Existing LEDs	3	2	13	N/R	3	2	13	6
B-Firing Range	Firing Range	Police Office	Existing LEDs	25	2	13	N/R	25	2	13	50
B-Firing Range	Firing Range	Police Office	Existing LEDs	18	2	13	N/R	18	2	13	36
B-Firing Range	Firing Range	Police Office	Existing LEDs	4	2	13	N/R	4	2	13	8
1-Firing Range	Stairs	Hallway	Existing LEDs	4	2	13	N/R	4	2	13	8
1-Office Building	Training Room	Conference	L1, 17, 10, 22 - 4' T5	16	2	30	4' T5 LED	16	2	13	32
1-Office Building	Training Room	Conference	L35	12	2	60	4 pin LED Repl	12	2	30	24
1-Office Building	Training Room	Conference	L34	6	2	30	4 pin LED Repl 26weql	6	2	10	12
1-Office Building	Training Room	Conference	L30	11	2	60	4 pin LED Repl	11	2	30	22
1-Office Building	Storage	Storage	L12 - 4' T5	3	4	30	4' T5 LED	3	4	13	12
1-Office Building	Storage	Storage	L1, 17, 10, 22 - 4' T5	4	2	30	4' T5 LED	4	2	13	8
1-Office Building	Equip	Storage	L6, 26 - 4' T5	4	2	30	4' T5 LED	4	2	13	8
1-Office Building	stairs	Hallway	L1, 17, 10, 22 - 4' T5	2	2	30	4' T5 LED	2	2	13	4
1-Office Building	Ante Room and AV	Office	L7, F1- 32W TRT	12	1	35	4 Tube CFL Repl	12	1	9	12
1-Office Building	Ante Room	Office	L3, L20 - 4' T5	2	2	30	4' T5 LED	2	2	13	4
1-Office Building	Hallways	Hallway	L2 - 2' T5	11	2	17.5	2' T5 LED	11	2	8	22
1-Office Building	Stairs	Hallway	L6, 26 - 4' T5	1	2	30	4' T5 LED	1	2	13	2
1-Office Building	Restrooms	Bathroom	L4, 14, 16- 32W TRT	14	1	35	4 Tube CFL Repl	14	1	9	14
1-Office Building	Restrooms	Bathroom	L8 - 6' T5HO	2	2	45	3' T5 LEDHO	2	2	16	4
1-Office Building	Restrooms	Bathroom	L5 - 3' T5HO	1	1	28	3' T5 LEDHO	1	1	16	1
1-Office Building	Entry Hall	Hallway	L28 - 4' T5	9	2	30	4' T5 LED	9	2	13	18
2-Office Building	Pvt Office	Office	L1, 17, 10, 22 - 4' T5	32	2	30	4' T5 LED	32	2	13	64
2-Office Building	Conference	Conference	L1, 17, 10, 22 - 4' T5	3	2	30	4' T5 LED	3	2	13	6
2-Office Building	Conference	Conference	L7, F1- 32W TRT	10	1	35	4 Tube CFL Repl	10	1	9	10
2-Office Building	Corridors	Hallway	L7, F1- 32W TRT	8	1	35	4 Tube CFL Repl	8	1	9	8
2-Office Building	Corridors	Hallway	L2 - 2' T5	6	2	17.5	2' T5 LED	6	2	8	12
2-Office Building	Jan	Storage	L1, 17, 10, 22 - 4' T5	2	2	30	4' T5 LED	2	2	13	4
1-Office Building	Toilets	Bathroom	L4, 14, 16- 32W TRT	3	1	35	4 Tube CFL Repl	3	1	9	3
1-Office Building	Toilets	Bathroom	L5 - 3' T5HO	3	1	28	3' T5 LEDHO	3	1	16	3
1-Office Building	Conference	Conference	L3, L20 - 4' T5	4	2	30	4' T5 LED	4	2	13	8
1-Office Building	Stairs	Hallway	L1, 17, 10, 22 - 4' T5	4	2	30	4' T5 LED	4	2	13	8
1-Animal Control	Office	Office	L1, 17, 10, 22 - 4' T5	4	2	30	4' T5 LED	4	2	13	8
1-Animal Control	Toilets	Bathroom	L4, 14, 16- 32W TRT	1	1	35	4 Tube CFL Repl	1	1	9	1
1-Animal Control	Toilets	Bathroom	L5 - 3' T5HO	1	1	28	3' T5 LEDHO	1	1	16	1
1-Animal Control	Storage	Storage	L1, 17, 10, 22 - 4' T5	1	2	30	4' T5 LED	1	2	13	2
1-Animal Control	Kennels	Office	L3, L20 - 4' T5	8	2	30	4' T5 LED	8	2	13	16
TOTAL	-	-	-	1283	-	-	-	1283	-	-	2525.0

[illegible] M[illegible]

[illegible] C[illegible] [illegible] [illegible] [illegible] [illegible]

[illegible] C[illegible] A[illegible]

[illegible]

[illegible] C[illegible] [illegible] [illegible]

[illegible] C[illegible] [illegible] [illegible] [illegible] [

[redacted] D[redacted]

[redacted] F[redacted]

[redacted] C[redacted]

[redacted] A[redacted]

[redacted] C[redacted]

[illegible] D[illegible] C[illegible]

T5 8W HE 2FT. DIR TITANIUM LED SERIES

GREENCREATIVE

PRO

DIRect

8W REPLACES

14W Fluo.

60% Energy Savings

- Compatible with Instant Start & Programmed Start ballasts
- Easy to install - Plug & Play Direct
- Exceptional efficacy 138 LPW
- Suitable for use in totally enclosed fixtures
- Powerful light output 1100 lumens
- Dimmable

50,000 H

ELECTRONIC BALLAST COMPATIBLE

PLUG & PLAY DIRect

5 YR WARRANTY

80 CRI (Ra)

ENCLOSED*

CLASSIFIED UL US · FC · lighting facts LED Product Partner · LM 79 · LM 80 · TM 21 · IES

HIGH LUMEN EFFICIENCY - SUPERIOR PERFORMANCE

T5 8W HE 2FT. DIR TITANIUM LED SERIES

GREENCREATIVE

SPECIFICATIONS**

Product Model	57958 8T5HE/2F/830/DIR	57959 8T5HE/2F/835/DIR	57960 8T5HE/2F/840/DIR
Type	T5	T5	T5
Base	Mini Bi-Pin G5	Mini Bi-Pin G5	Mini Bi-Pin G5
Power (W)	8	8	8
Voltage - Frequency	120-277V 50-60Hz	120-277V 50-60Hz	120-277V 50-60Hz
Color Temp. (ANSI)	Warm White 3000K	Neutral White 3500K	Cool White 4000K
CRI (Ra)	80	80	80
Typical lumens (lm)	950	950	1100
Efficacy (LPW)	119	119	138
Light Emitting Area	270°	270°	270°
Beam Angle	120°	120°	120°
Dimmable	Yes	Yes	Yes
Power Factor	0.9	0.9	0.9
THD	<20%	<20%	<20%
Rated Lifetime - L70 (hrs.)	50,000	50,000	50,000
Dia. x MOL	0.67"x22.17" (17x563mm)	0.67"x22.17" (17x563mm)	0.67"x22.17" (17x563mm)
Weight (lb. / g)	0.17lb. / 78g	0.17lb. / 78g	0.17lb. / 78g

PROGRAM START BALLAST PERFORMANCE

Bare Lamp (W)	System (W)	3000K Lumens	3500K Lumens	4000K Lumens
8	10	950	950	1100

Testing Method: Above system power is half the total system power of a 2-tube installation using an electronic ballast. Power and lumen output will vary based on ballast and fixture type. Above data is indicative only.

* Suitable for use in totally enclosed fixtures
** Specification data is preliminary and may be subject to change
*** Suitable for damp locations. Not for use where directly exposed to the weather or water

SINCE 1945 KEYSTONE | DIRECTDRIVE LED LINE VOLTAGE T5 TUBES

KT-LED12T5HO-24GC-835-D

T5 LED LAMP

DESCRIPTION

12W T5 LED | 3500K | >80 CRI | High Efficiency

c UL us CLASSIFIED | RoHS Compliant | 5 YEAR WARRANTY

LAMP TYPE: Linear
BULB TYPE: T5 LED
BASE TYPE: G5 (Miniature Bi-Pin)
WATTAGE: 12W
COLOR TEMPERATURE: 3500K
COLOR RENDERING INDEX (CRI): >80
WARRANTY: 5 Years

PRODUCT FEATURES

- Replacement for Conventional Fluorescent Lamp
- 50,000+ Hour Lifetime
- Environmentally Friendly: No Mercury Used
- Instant Startup
- Direct Replacement for F24T5/HO Fluorencent Lamp
- Frosted Lens Eliminates Pixelation
- UL Classified
- Operating Temperature: -20ºC/-4ºF to 45ºC/113ºF
- Integral Driver (Isolated), Eliminates the Need for External Driver or Ballast
- 110+ Lumens per Watt
- Improved Lamp Durability with Shatterproof Coated Glass
- ETL Sanitation Listed NSF/ANSI Standard 2 - Food Equipment

OPERATING SPECIFICATIONS

ELECTRICAL CHARACTERISTICS

Input Voltage	Power Consumption	Power Factor	Input Current
120-277Vac	12W	>0.9	0.10A @ 120V 0.04A @ 277V

PHOTOMETRIC CHARACTERISTICS

Color Temperature (CCT)	3500K
Luminous Flux	1400 lm
Color Rendering Index (CRI)	>80
Efficacy	117 lm/W
Beam Angle	240º
Visible Light Area	325º

RATED LIFE

L70 (Hours)	50,000

POLAR CANDELA DISTRIBUTION

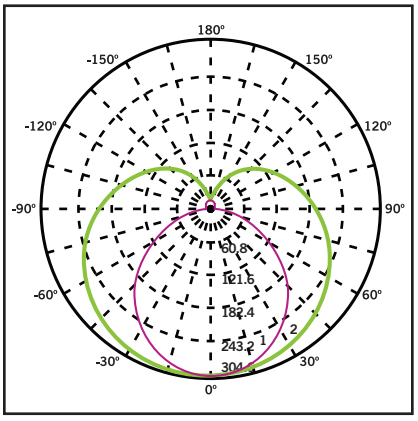

Located at Horizontal Angle = 0, Vertical Angle 0

1. **Violet** Vertical Plane through Horizontal Angles (90-270)

2. **Green** Vertical Plane through Horizontal Angles (0-180)

SINCE 1945 KEYSTONE | DIRECTDRIVE LED LINE VOLTAGE T5 TUBES

KT-LED12T5HO-24GC-835-D

T5 LED LAMP

WIRING DIAGRAMS

1. Cut all existing connections to ballast as shown below and remove ballast.

Typical Ballast Configurations:

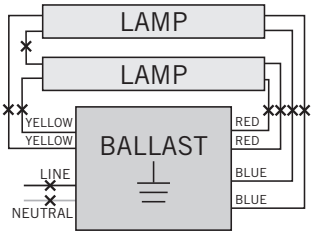

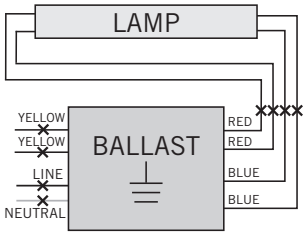

Typical Non-Shunted Lampholder

Connect wires directly to these terminals

CAUTION: Use only non-shunted lampholders.
Do not install product in a fixture with shunted lampholders (found in all fixtures using instant start ballasts). If the current lampholders are shunted, remove them and replace them with non-shunted lampholders. Make new connections directly to terminals as indicated above.

Keystone can provide any style replacement lampholders. Call us at 800-464-2680.

2. Re-wire fixture as shown below.

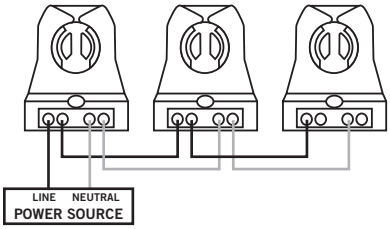

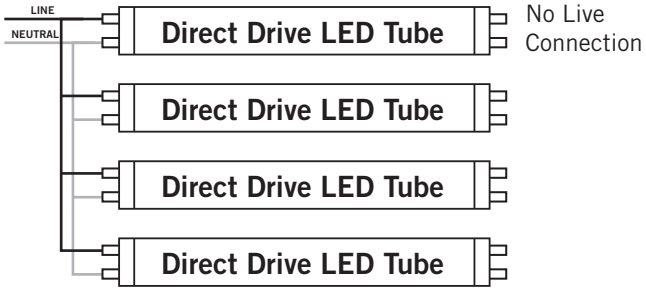

No Live Connection

PHYSICAL CHARACTERISTICS

LAMP DIMENSIONS

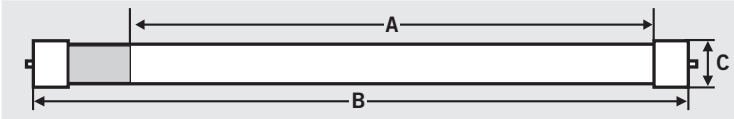

A (Illuminated Length)	17.63”
B (Body Length)	21.56”
C (Diameter)*	0.82”

NOMINAL LENGTH: 24” **BASE TYPE:** G5 (Miniature Bi-Pin)

*Though nominally referred to as a T5, this lamp has a T6 diameter

ORDERING INFORMATION

ORDER CODE	PACKAGING STYLE	PACK QTY.	ITEM STATUS
KT-LED12T5HO-24GC-835-D-CP	Carton Pack (Egg Crate Packaging)	25	Quick Ship

CATALOG NUMBER BREAKDOWN

KT-LED12T5HO-24GC-835-D-CP

- KT — Keystone Technologies
- LED — LED Lamp
- 12 — Wattage
- T5HO — Lamp Type
- 24 — Nominal Length (Inches)
- GC — Shatter-Proof Coated Glass
- 835 — 800 Series
- D — Color Temp.
- CP — Direct Drive Series
- Packaging Style

SINCE 1945 KEYSTONE | DIRECTDRIVE LED LINE VOLTAGE T5 TUBES

KT-LED16T5HO-36GC-850-D

T5 LED LAMP

DESCRIPTION

16W T5 LED | 5000K | >80 CRI | High Efficiency

c UL us CLASSIFIED | RoHS Compliant | 5 YEAR WARRANTY

LAMP TYPE: Linear
BULB TYPE: T5 LED
BASE TYPE: G5 (Miniature Bi-Pin)
WATTAGE: 16W
COLOR TEMPERATURE: 5000K
COLOR RENDERING INDEX (CRI): >80
WARRANTY: 5 Years

PRODUCT FEATURES

- Replacement for Conventional Fluorescent Lamp
- 50,000+ Hour Lifetime
- Environmentally Friendly: No Mercury Used
- Instant Startup
- Direct Replacement for F39T5/HO Fluorencent Lamp
- Frosted Lens Eliminates Pixelation
- UL Classified
- Operating Temperature: -20ºC/-4ºF to 45ºC/113ºF
- Integral Driver (Isolated), Eliminates the Need for External Driver or Ballast
- 110+ Lumens per Watt
- Improved Lamp Durability with Shatterproof Coated Glass
- ETL Sanitation Listed NSF/ANSI Standard 2 - Food Equipment

OPERATING SPECIFICATIONS

ELECTRICAL CHARACTERISTICS

Input Voltage	Power Consumption	Power Factor	Input Current
120-277Vac	16W	>0.9	0.13A @ 120V 0.06A @ 277V

PHOTOMETRIC CHARACTERISTICS

Color Temperature (CCT)	5000K
Luminous Flux	1900 lm
Color Rendering Index (CRI)	>80
Efficacy	119 lm/W
Beam Angle	240º
Visible Light Area	325º

RATED LIFE

L70 (Hours)	50,000

SPECTRAL DISTRIBUTION

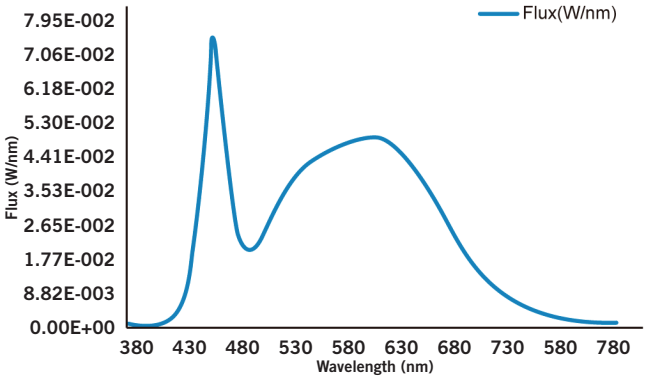

POLAR CANDELA DISTRIBUTION

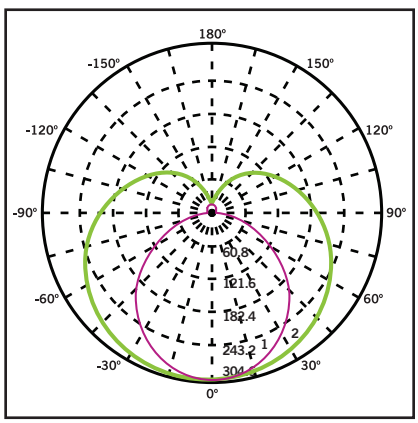

Located at Horizontal Angle = 0, Vertical Angle 0

1. **Violet** Vertical Plane through Horizontal Angles (90-270)
2. **Green** Vertical Plane through Horizontal Angles (0-180)

SINCE 1945 KEYSTONE | DIRECTDRIVE LED LINE VOLTAGE T5 TUBES

KT-LED16T5HO-36GC-850-D

T5 LED LAMP

WIRING DIAGRAMS

1. Cut all existing connections to ballast as shown below and remove ballast.

Typical Ballast Configurations:

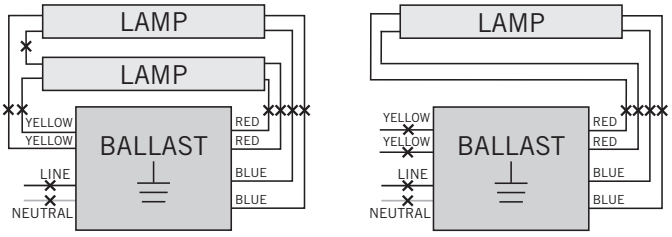

2. Re-wire fixture as shown below.

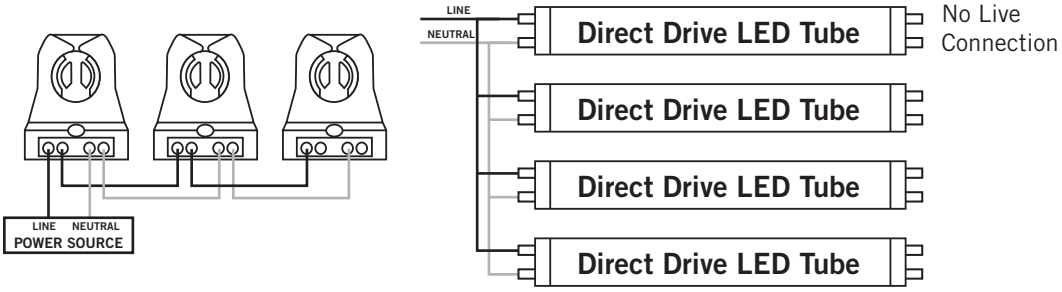

Typical Non-Shunted Lampholder

Connect wires directly to these terminals

CAUTION: Use only non-shunted lampholders.

Do not install product in a fixture with shunted lampholders (found in all fixtures using instant start ballasts). If the current lampholders are shunted, remove them and replace them with non-shunted lampholders. Make new connections directly to terminals as indicated above.

Keystone can provide any style replacement lampholders. Call us at 800-464-2680.

PHYSICAL CHARACTERISTICS

LAMP DIMENSIONS

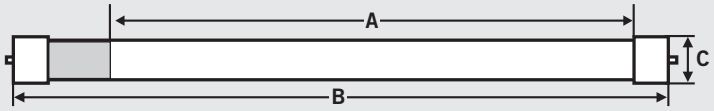

A (Illuminated Length)	29.56”
B (Body Length)	33.38”
C (Diameter)*	0.82”

NOMINAL LENGTH: 36” **BASE TYPE:** G5 (Miniature Bi-Pin)

*Though nominally referred to as a T5, this lamp has a T6 diameter

ORDERING INFORMATION

ORDER CODE	PACKAGING STYLE	PACK QTY.	ITEM STATUS
KT-LED16T5HO-36GC-850-D-CP	Carton Pack (Egg Crate Packaging)	25	Quick Ship

CATALOG NUMBER BREAKDOWN

KT-LED16T5HO-36GC-850-D-CP

Keystone Technologies	LED Lamp	Wattage	Lamp Type	Nominal Length (Inches)	Shatter-Proof Coated Glass	800 Series	Color Temp.	Direct Drive Series	Packaging Style

Light Efficient Design

Product Specifications Sheet

4 Pin Electronic Ballast PL Lamp Retrofits - Type A

LED for HID RETROFIT

Models

LED-7334-XXK-G2 120-277VAC, CE, ROHS, 2700K, 3500K & 4000K CCT
LED-7330-XXK-G2, 120-277VAC, CE, ROHS, 2700K, 3500K & 4000K CCT
LED-7338-XXA, 120-277VAC, CE, ROHS, 2700K, 3500K & 4000K CCT

Description

Light Efficient Design's 4 Pin PL Lamp Retrofit Lamps replace CFL lamps up to 26W. Unique lamp designs closely matches existing PL lamp to deliver optimum light distribution.
Type A Driver- Works on Electronic Ballast only.

Features

- 11W or 12W LED Replaces up to 26W CFL Lamps
- Up to 1,200 lumen output and 106 LPW efficacy
- G24q or GX24q PL/CFL sockets
- Dimmable with dimmable electronic ballast only
- Suitable for damp environments and semi-enclosed recessed fixtures or equivilent
- 50,000 hour rated LED life (supported by LM80 and ISTMT reports (see website)
- 5 Year Limited Warranty
- Insect/dust resistant housing

LED-7330

TECHNICAL SPECIFICATIONS

MODEL	VOLTAGE	WATTAGE	LUMENS*	LPW*	REPLACES	BASE	CCT	CRI*	THD*	PF*	R9*	Duv*	LIGHT DISTRIBUTION	DIMMABLE
LED-7334-27K-G2	Electronic Ballast only	11W	1200	110	26W 4 Pin	G/GX24q	2700K	>80	N/A	N/A	N/A	N/A	120°	Yes
LED-7334-35K-G2			1200	110			3500K	>80	N/A	N/A	N/A	N/A		
LED-7334-40K-G2			1200	110			4000K	>80	N/A	N/A	N/A	N/A		
LED-7330-27K-G2		10W	760	90	26W 4 Pin	G/GX24q	2700K	>80	N/A	N/A	N/A	N/A	360°	No
LED-7330-35K-G2			850	85			3500K	>80	N/A	N/A	N/A	N/A		
LED-7330-40K-G2			916	100			4000K	>80	N/A	N/A	N/A	N/A		
LED-7338-27A		12W	1100	95	26W 4 Pin	G/GX24q	2700K	>80	N/A	N/A	N/A	N/A	120°	No
LED-7338-35A			1100	95			3500K	>80	N/A	N/A	N/A	N/A		
LED-7338-40A			1100	95			4000K	>80	N/A	N/A	N/A	N/A		

PACKAGING SPECIFICATIONS

MODEL	PRODUCT DIMENSION	PRODUCT WEIGHT	UNIT CARTON DIMENSION	UNIT CTN WT	SHIPPER CARTON DIMENSION	SHIPPER CTN WT	CARTON QUANTITY
LED-7334-G2	5.75 X 1.374 in.	0.4 Lbs.	3.2 X 3.2 X 4.7 in./ 81 X 81 X 119 mm.	0.3 lbs/.13 kg.	12.5 X 15.6 X 5.1 in./ 320 X 395 X 130 mm.	4 lbs./1.8 kg.	24
LED-7330-G2	6.2 X 1.4 in.	0.4 Lbs.	#N/A	0.3 lbs/.13 kg.	10.5 X 7.25 X 7.25 in./ 266 X 184 X 184 mm.	4 lbs./1.8 kg.	24
LED-7338A	3.78 X 2.99 in.	0.4 Lbs.	3.2 X 3.2 X 4.7 in./ 81 X 81 X 119 mm.	0.4 lbs./.18 kg.	18.1 X 9.44 X 6.88 in./ 460 X 240 X 175 mm.	20 lb./9.1 kg.	50

ENERGY SAVISING vs. HID

LED Lamp Power (watts)	11
PL Lamp Power (watts)	26
PL Ballast Power (watts)	4
Total power Savings (watts)	18.9
Annual Energy Savings	$10.62
Lifetime Energy Savings over 50,000 hrs)	$103.95

Please see instruction sheet for a list of compatible ballasts.

Mounting Orientation

BASE DOWN	BASE UP	HORIZONTAL
APPROVED	APPROVED	APPROVED

Recommended Mininum Fixture Size		THERMAL SPECIFICATIONS	
		OPERATING TEMPERATURE	0°F to +85°F / -17°C to +30°C
Width	6	IN-SITU TEMP MEASUREMENT/L70	
Height	6	LED TEMPERATURE*	N/A
Volume (Cu. Cm.)	216	L70 LED LUMEN MAINTAINENCE*	N/A
		* FROM ISTMT REPORT AT 25°C	

LED T5 | DIRECT REPLACEMENT

Product Features

- Easy Plug-and-Play Installation - No Rewiring Required
- Operates with Electronic Ballasts[1]
- Identical Look to Standard Fluorescent Lamp
- Full Glass Lens with 240 Degree Light Distribution
- High Efficacy with 50% Energy Savings
- DLC QPL Listed
- UL Listed for Direct Fuorescent Lamp Replacement
- 5-Year Warranty
- ETL Sanitation Listed for Food Service Applications

$90 Total Life Savings[3]

Applications

- Office Buildings/Schools
- Warehouse
- Manufacturing Facilities
- Parking Garages

Model Number[2]	Lamp Type	Base	Watts / Replaced	Lumens	CCT	MOL	Distribution	Certification	Warranty
LBT5F16xx	Plug-n-Play	G5	13W / 28W	1650 lm	3500K 4100K 5000K	45.8”	240°	UL	5-Years
LBT5F33xx	Plug-n-Play	G5	31W / 54W	3300 lm	3500K 4100K 5000K	45.8”	240°	UL/DLC	5-Years

NOTE 1: Please reference our Ballast Compatibility List
NOTE 2: Replace xx with 35 for 3500K, 41 for 4100K, and 50 for 5000K Color Temperature
NOTE 3: Savings calculated by 50,000 hour Lifetime, Electricity rated $0.12, and 3 Operating Hours Per Day.

S29850

9WPLH/LED/830/DR/4P
9W LED PL 4-Pin; 3000K; 950 Lumens; G24q base; 50000 Average rated hours; 120 Deg. beam spread

S29850

Features
- Replaces 26, 32, and 42 watt CFLs
- Direct Replacement - for use with Electronic, Instant Start, Rapid Start, and Programmed Start ballasts with no rewiring required. Ballast required.
- Instant on to full brightness / no flickering
- Horizontal operation
- Up to 70% energy saving
- Long life - 50,000 hours
- 5 year warranty

*Ballast required (See Ballast Compatibility Chart)

Item Number	UPC	Watts	Fluorescent Equivalent	Lamp Shape	Base	Lamp Code	Dimmable/Non-Dimmable
S29850	045923298509	9	26, 32, and 42 watt CFL	PL	G24q	9WPLH/LED/830/DR/4P	Non-Dimmable

Finish	MOL In Inches	MOD In Inches	Initial Lumens	Average Rated Hours	Kelvin Temp	Color	CRI
Frost	6-5/8"	1-3/32"	950	50000	3000	Soft White	82

Beam Spread Deg	Operating Temperature	Package Type	CEC Status	DLC ID:	RoHS Compliant	UL or ETL Listed	UL Classification
120	-20C (-4F) to a maximum of +45C (+113F)	Box	Lawful for sale in California	PLJAGBSSPJZJ DLC Search	Yes	Yes	cULus Classified - Damp Location Rated

Warranty
5 Year Limited

LED InstantFit Lamps

24T5 LED/HO/48-3500 IF 10/1

Philips LED T8 InstantFit Lamps are an ideal energy saving choice for existing linear fluorescent fixtures.

Product data

General Information	
Cap-Base	G5 [G5]
Nominal Lifetime (Nom)	50000 h
Switching Cycle	50000X
B50L70	50000 h

Light Technical	
Color Code	835 [CCT of 3500K]
Luminous Flux (Nom)	3300 lm
Luminous Flux (Rated) (Nom)	3300 lm
Correlated Color Temperature (Nom)	3500 K
Color Consistency	<5
Color Rendering Index (Nom)	82
LLMF At End Of Nominal Lifetime (Nom)	70 %

Operating and Electrical	
Input Frequency	40000-80000 Hz
Power (Rated) (Nom)	24 W
Lamp Current (Max)	600 mA
Lamp Current (Min)	400 mA
Starting Time (Nom)	0.5 s
Warm Up Time To 60% Light (Nom)	0.5 s
Power Factor (Nom)	0.9
Voltage (Nom)	39-64 V

Temperature	
T-Ambient (Max)	45 °C
T-Ambient (Min)	-20 °C
T-Storage (Max)	65 °C
T-Storage (Min)	-40 °C

Controls and Dimming	
Dimmable	No

Mechanical and Housing	
Product Length	1100 mm

Approval and Application	
Energy Saving Product	Yes
Approval Marks	UL certificate RoHS compliance

Product Data	
Order product name	24T5 LED/HO/48-3500 IF 10/1
EAN/UPC - Product	046677467135
Order code	929001283804
Numerator - Quantity Per Pack	1
Numerator - Packs per outer box	10

Material Nr. (12NC)	929001283804
Net Weight (Piece)	0.170 kg

Warnings and Safety

- Philips LED T8 InstantFit lamps will only operate properly on compatible instant-start ballasts. Please referto the Philips LED T8 InstantFit Installation Guide, which can be obtained through your local Philips Sales Representative, or visit www.philips.com/tled

Dimensional drawing

Product	D1	D2	A1	A2	A3
24T5 LED/HO/48-3500 IF 10/1	15.2 mm	17.8 mm	1147.8 mm	1154.9 mm	1162 mm

TLED 120V 24-54W 3600lm 3500K G5

Photometric data

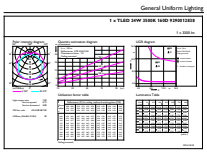

© 2017 Philips Lighting Holding B.V. All rights reserved. Philips Lighting reserves the right to make changes in specifications and/or to discontinue any product at any timewithout notice or obligation and will not be liable for any consequences resulting from the use of this publication.

Euri Lighting

LED SP38-1000*h*

Part #: SBPAR30DM/I/13W/1050/40D/30K/E26 **Bulb Class:** PAR38

3000K CCT

Product Description

LED SP38-1000*h* delivers superior brightness, valuable energy savings and long lasting performance. This Flood LED PAR38 Class bulb is ideal for task lighting due to its uniform *halogen white light (3000K) and replaces conventional 100 Watt incandescent bulbs. Enjoy features such as: instant on, dimming options, shatter resistance, mercury free and damp rated.

Specifications

Input Power	Input Voltage	Lumen Output	Beam Angle	Center Beam	CCT
13 W	AC 120 V	1050 lm	40°	N/A	3000 K

CRI	Luminous Efficacy	Power Factor	Input Current	Base/Cap	Lamp Lifespan
80	80 lm/W	0.7	N/A	E26	25,000 Hrs.

Product Features

- Dimmable
- Instant-On/Off
- Mercury Free
- Energy Efficient

Product Dimensions

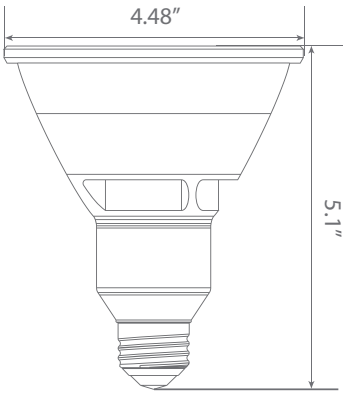

Product Photometric Data

CURRENTLY NOT AVAILABLE

[redacted] ECM [redacted] [redacted] L[redacted] M[redacted] [redacted]

Economic Summary

ECM[redacted] [redacted] [redacted]
E[redacted] [redacted] [redacted]
A[redacted] M[redacted] D[redacted] [redacted] [redacted]
[redacted] G[redacted] [redacted] [redacted]
E[redacted] C[redacted] [redacted]
E[redacted] I[redacted] [redacted] C[redacted]
[redacted] [redacted] [redacted]
GHG E[redacted] [redacted] M[redacted] [redacted]

Existing Condition

[redacted]

Recommendation

[redacted] AC [redacted]

[redacted]

F[redacted]

[redacted]

[illegible]

[illegible].0 G[illegible]

1.1 The design and installaton of the plug load management system is left to the contractor's discreton. The plug load management system should be designed to maximize energy savings while remaining wi hin Pascua Yaqui Tribe's project budget and payback period. NORESCO based its analysis on the following parameters:

- Estimated 95 controlled outlets.
- 50% controllable plug loads (fracton of total plug loads that will operate on system).
- 20% plug load savings (average energy reduct on for each controlled device).

1.2 Contactor is to coordinate the installation of the plug load management system wih the Pascua Yaqui Tribe and the building staf.

1.3 Contactor is responsible for completng all applicable incentive/rebate applicatons for Owner.

1.4 All work is to comply with the 2018 Pima County Codes. More informaton can be found on the web at: http://webcms.pima.gov/government/development_services/building_and_sie_development

1.5 Contactor responsible for fling all permits, reviews and inspections with the respective municipaliy/authority.

2.0 Commissioning Ac[illegible]ivities

The contractor shall:

2.1. Conduct installation and functonal checks to veriy the proper operation of the system.

2.2. Contactor is to utlize and complete manufacturers recommended startup forms for all equipment and provide these forms to the project team for review immediately afer completon.

2.3. Develop a systems manual that provides future operatng staff the information needed to understand and optimally operate the commissioned systems. The Systems Manual shall include the following for each commissioned system:

2.3.1. Final version of the Basis of Design.

2.3.2. System single line diagram.

2.3.3. A[illegible]built drawings, sequences of operatons, and control drawings.

2.3.4. Operatng instructons for system.

2.3.5. Recommended schedule of maintenance requirements and f equency, if not already included in the project[illegible]& M manuals.

2.4. The contactor is to provide training syllabus and training materials for review by the project team. Contactor to provide classroom training and feld walk-through

[illegible] D[illegible] DE[illegible]

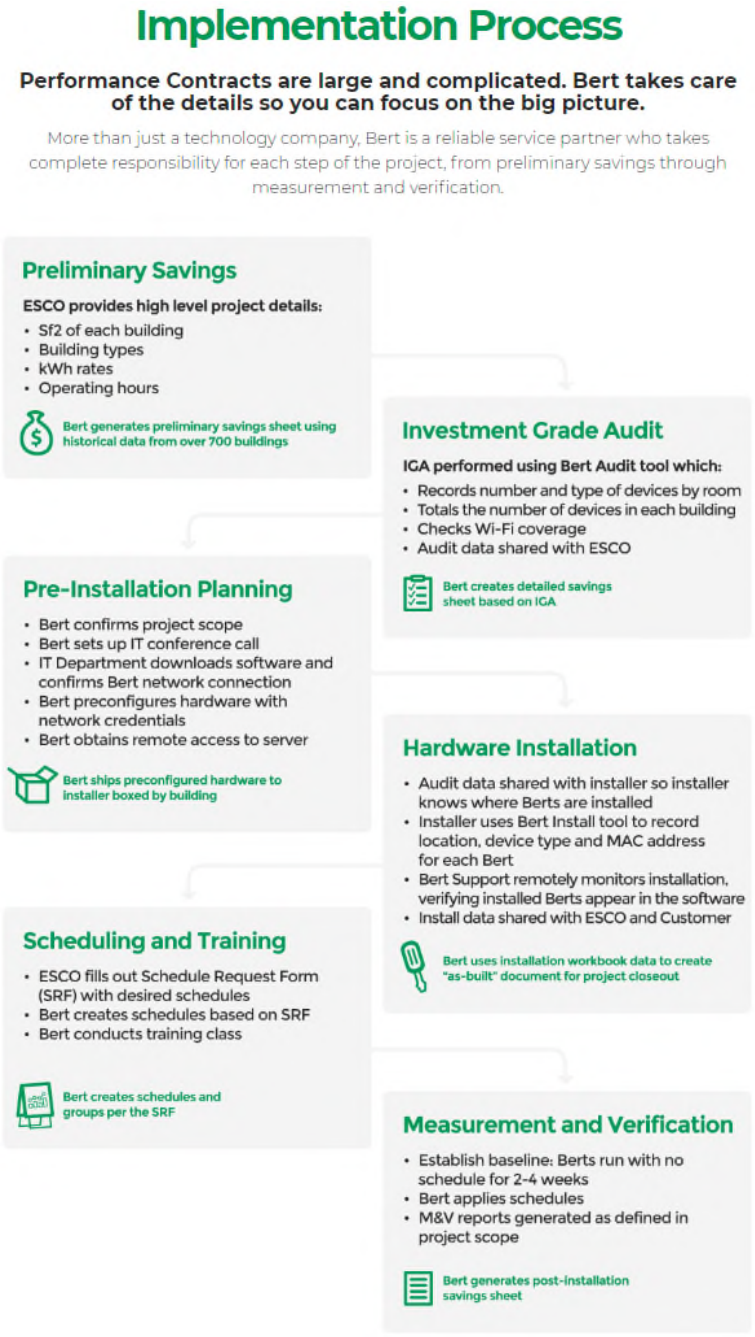
Implementation Process
Performance Contracts are large and complicated. Bert takes care of the details so you can focus on the big picture.
More than just a technology company, Bert is a reliable service partner who takes complete responsibility for each step of the project, from preliminary savings through measurement and verification.
Preliminary Savings
ESCO provides high level project details:
• Sf2 of each building
• Building types
• kWh rates
• Operating hours
Bert generates preliminary savings sheet using historical data from over 700 buildings
Investment Grade Audit
IGA performed using Bert Audit tool which:
• Records number and type of devices by room
• Totals the number of devices in each building
• Checks Wi-Fi coverage
• Audit data shared with ESCO
Bert creates detailed savings sheet based on IGA
Pre-Installation Planning
• Bert confirms project scope
• Bert sets up IT conference call
• IT Department downloads software and confirms Bert network connection
• Bert preconfigures hardware with network credentials
• Bert obtains remote access to server
Bert ships preconfigured hardware to installer boxed by building
Hardware Installation
• Audit data shared with installer so installer knows where Berts are installed
• Installer uses Bert Install tool to record location, device type and MAC address for each Bert
• Bert Support remotely monitors installation, verifying installed Berts appear in the software
• Install data shared with ESCO and Customer
Bert uses installation workbook data to create "as-built" document for project closeout
Scheduling and Training
• ESCO fills out Schedule Request Form (SRF) with desired schedules
• Bert creates schedules based on SRF
• Bert conducts training class
Bert creates schedules and groups per the SRF
Measurement and Verification
• Establish baseline: Berts run with no schedule for 2-4 weeks
• Bert applies schedules
• M&V reports generated as defined in project scope
Bert generates post-installation savings sheet

BERT® Smart Plug Series Data Sheet

Hardwired Measurement and Control for 15A Devices

	BERT 110 M	BERT 110 E
Dimensions	3.5″ W x 3.5″ H x 2″ D	3.5″ W x 3.5″ H x 2″ D
Weight	4.2 Ounces	4.4 Ounces
Voltage	120 Volts	120 Volts
Amperage	Up to 15 Amps	Up to 15 Amps
Operating Environment	Indoor Use Only	Indoor Use Only
Manual Override Button	YES	YES
BAS Integration	BACnet/IP	BACnet/IP
Standard Software	Measurement, Analysis and Control	Measurement, Analysis and Control
Intelligent Control Options	Threshold and Temperature	Threshold and Temperature
Measurement Accuracy	+/-5%	+/-5%
Measurement Update Frequency	Configurable: 1 to 999 seconds	Configurable: 1 to 999 seconds
Stored Measurement Data - Server	Unlimited	Unlimited
Stored Measurement Data - Bert	14-Day Rolling Log	14-Day Rolling Log
M & V Reporting	Daily, Weekly, Monthly, Yearly or User Defined	Daily, Weekly, Monthly, Yearly or User Defined
Wireless Standards	802-11 b/g	802.11 b/g/n
Communication Protocol	UDP	UDP
Network Security	WPA/WPA2-PSK	WPA/WPA2-PSK, WPA/WPA2-Enterprise
Certifications	UL 916, CAN/CSA-C22.2 No. 205, FCC	UL 916, CAN/CSA-C22.2 No. 205, FCC

RECOMMENDED DEVICES FOR USE WITH BERT SMART PLUGS

Printers, Copiers, Projectors, Charging Carts, Vending Machines,
Large Coffeemakers, Hot/Cold Beverage Dispensers, Window AC units

MEET BERT your energy control freak.

© 2018 Best Energy Reduction Technologies, LLC. All Rights Reserved.

ECM [redacted]

Economic Summary

ECM[redacted]	
E[redacted]	[redacted]
A[redacted] M[redacted] D[redacted]	[redacted]
E[redacted] C[redacted]	[redacted]
E[redacted] I[redacted] C[redacted]	[redacted]
[redacted]	[redacted]
E[redacted] I[redacted]	[redacted]
[redacted] C[redacted]	[redacted]
[redacted] I[redacted]	[redacted]
M[redacted] C[redacted] M[redacted]	[redacted]

Existing Condition

[redacted]

[redacted]

Recommendation

[redacted]

Figure 1 Proposed Solar Layout

A [illegible] is proposed to be installed on the roof of the [illegible] building. The [illegible] will be [illegible] and will be [illegible] to the [illegible] building. The [illegible] will be [illegible] to the [illegible] building. The [illegible] will be [illegible] to the [illegible] building. The [illegible] will be [illegible] to the [illegible] building.

[illegible]

[illegible]

[illegible] The [illegible] will be [illegible] to the [illegible] building. The [illegible] will be [illegible] to the [illegible] building. The [illegible] will be [illegible] to the [illegible] building.

[illegible] The [illegible] will be [illegible] to the [illegible] building. The [illegible] will be [illegible] to the [illegible] building. The [illegible] will be [illegible] to the [illegible] building.

- [illegible] The [illegible] will be [illegible] to the [illegible] building. The [illegible] will be [illegible] to the [illegible] building. The [illegible] will be [illegible] to the [illegible] building.
- [illegible] The [illegible] will be [illegible] to the [illegible] building. The [illegible] will be [illegible] to the [illegible] building. The [illegible] will be [illegible] to the [illegible] building.
- [illegible] The [illegible] will be [illegible] to the [illegible] building. The [illegible] will be [illegible] to the [illegible] building. The [illegible] will be [illegible] to the [illegible] building.

[illegible] The [illegible] will be [illegible] to the [illegible] building. The [illegible] will be [illegible] to the [illegible] building. The [illegible] will be [illegible] to the [illegible] building.

[redacted] C[redacted]

[redacted] A[redacted] C[redacted] M[redacted]

[redacted] C[redacted]

[redacted] M[redacted]

[redacted]

[redacted]

[redacted]

[redacted]

[redacted]

[redacted]

[redacted] A[redacted]

[redacted] E[redacted]

[redacted] A[redacted]

[redacted] I[redacted]

[redacted] A[redacted]

[redacted] I[redacted]

[redacted]

- A[redacted] DC [redacted] AC[redacted]
- M[redacted]
- [redacted]
- [redacted]

[illegible] C[illegible] A[illegible]

[illegible]

[illegible] C[illegible]

[illegible] C[illegible]

[illegible] D[illegible] M[illegible]

[illegible] F[illegible] B[illegible] D[illegible]

[illegible]

[illegible] M[illegible]

[illegible] A[illegible]

[illegible] C[illegible]

[illegible]

LG
Life's Good

LG PRODUCT WARRANTY
25 YEAR
15 YEARS LONGER THAN INDUSTRY STANDARD OF 10 YEARS

LG NeON® 2

LG400/405N2W-V5

THE 72 CELL POWER HOUSE

UP TO 19.5% MODULE EFFICIENCY

Awards Received By LG Solar™

EUPD RESEARCH TOP BRAND PV MODULES AUSTRALIA 2019
EUPD RESEARCH TOP BRAND PV MODULES AUSTRALIA 2018
EUPD RESEARCH TOP BRAND PV MODULES AUSTRALIA 2017
EUPD RESEARCH TOP BRAND PV MODULES AUSTRALIA 2016
inter solar award 2016 WINNER
inter solar award 2015 WINNER
inter solar award 2013 WINNER

THE NeON® 2 72 CELL - 405W - THE PANEL OF THE FUTURE AVAILABLE TODAY

The new LG NeON® 2 72 cell has seen many improvements, from longer warranties and higher efficiency to more busbars. This panel is ideal for commercial systems or solar farms seeking an efficient use of space and a high quality panel with great output efficiency.

The new NeON® 2 with 72 cells adopts the award winning CELLO Technology replacing 3 busbars in each cell with 12 thin wires to enhance power output. This technology sets a new standard for innovation and was recognised with the 2015 Photovoltaic Innovation Award at the Intersolar Industry Event in Germany. LG also won the 2016 Intersolar award for our new NeON® Bifacial range.

More Power per Square Metre

LG NeON® 2's 405W are a similar physical size to many conventional 320W 72 cell panels. This means with the LG NeON® 2 405W you get 26% more electricity per square metre than a 320W panel. So you can install more kW of solar on your roof with the LG NeON® 2.

25 Years Product Warranty (Parts & Labour)

LG has extended the product warranty of the LG NeON® 2 by an additional 15 years from industry average 10 to 25 years. This includes coverage for labour and transport.

Improved High Temperature Performance

Solar panels slowly lose ability to generate power as they get hotter. LG NeON® 2, has an improved temperature co-efficient of -0.36%/°C to our previous model and to the majority of competitor models which means in high temperatures LG NeON® 2 panels will deliver higher output.

Improved 25 Year Performance Warranty

The initial degradation of cells has been improved from -3% to -2%, in the 1st year and the annual rate of degradation has fallen from -0.7%/year to -0.35%/ year thereafter. This brings an 89.6% warranted output at 25 years, compared to 80.2% for many competing panels.

Made in Korea

www.lgenergy.com.au

LG NeON® 2 - 72 Cell

ABOUT LG SOLAR

LG Electronics embarked on a solar energy research programme in 1985, using our vast experience in semi-conductors, chemistry and electronics. LG Solar modules are now available in 32 countries. In 2013, 2015 and 2016 the LG NeON® range won the acclaimed Intersolar Award in Germany, which demonstrates LG Solar's lead in innovation and commitment to the renewable energy industry. Additionally, LG Solar™ won the Australian Top Brand award in 2016, 2017 and 2018.

With over 200 lesser known brand panels selling in Australia, LG solar panels offer a peace of mind solution, as they are backed by an established global brand.

KEY FEATURES

Proven Field Performance

LG has been involved in a number of comparison tests of the LG panels against many other brand panels. LG NeON® models are consistently among the best performing in these tests.

Additional Certification

LG NeON® 2 panels have received additional certification including for, Salt Mist Corrosion to maximum severity 6. Ammonia Resistance certification and PID Resistance Tests.

Strict Quality Control Reliable for the Future

The quality control of LG world-class production processes is monitored and improved to Six Sigma quality control standards, which includes 500+ monitoring points to effectively maintain and improve our uncompromising standards.

Multi Anti-reflective Coatings Increase Output

LG Solar™ is using an anti-reflective coating on the panels glass as well as on the cell surface to ensure more light is absorbed in the panel and not reflected. More absorbed light means more electricity generation.

Installation Time Savings

This NeON® 2 - 72 cell panel can reduce installation time for commercial systems, as there are less panels required eg. to install a 3.2 MW system one would need 8,000 LG400W instead of 10,000 of a 320W – 72 cell panel. There will also be significant savings in design, transport, labour, rails and cabling and 20% less space required.

"CELLO" Technology Increases Power

"CELLO" Multi wire busbar cell technology lowers electrical resistance and increases panel efficiency, giving more power per panel and provides a more uniform look to the panel.

Low LID

The N-type doping of the NeON® cells results in extremely low Light Induced Degradation (LID) when compared with the standard P-type cells. This means more electricity generation over the life of the panel as the panel degrades less.

Extensive Testing Programme

LG solar panels are tested between 2 to 3 times the International Standards at our in-house testing laboratories, ensuring a very robust and longer lasting solar module.

Double-Sided Cell Structure

In conventional panels the cells produce energy from the front only. The NeON® Cell produces energy from both the front as well as the back of the cell. This innovative technology allows the absorption of light from behind the panel which raises the panel's efficiency and electricity output.

Positive Tolerance (0/+3%)

If we sell you a 400 Watt panel then the flash test of this panel will show somewhere between 400W and 412.1W. Some competitor panels have -/+ tolerance, so you could get a flash test result below the rated Watt, meaning you pay for Watts you never get.

Excellent low light performance

LG NeON 2 panels will give better performance under low light, such as early morning or late afternoon compared to many competing panels.

Automated Production in South Korea

All LG solar panels are manufactured in a custom designed and fully automated production line by LG in Gumi, South Korea ensuring extremely low tolerances. This means great quality and build consistency between panels.

LG NeON® 2 72 cell– INNOVATIVE, CLEVER, HIGH EFFICIENT

LG NeON® 2 72 cell solar modules now offer even more performance. Featuring LG's 12 wire busbar CELLO Technology for improved performance and reliability, it can also withstand a static front panel load of 5,400 pascals. LG has extended its product warranty from 10 to 25 years and improved its linear performance guarantee to at least 89.6% of nominal output after 25 years.

LOCAL WARRANTY, GLOBAL STRENGTH

LG Solar™ is part of LG Electronics Inc., a global and financially strong company, with over 50 years of experience in technology.

Good to know: LG Electronics Australia Pty Ltd is the warrantor in Australia and NZ for your solar modules. So LG support, via offices in every Australian mainland state and NZ and through our 70 strong, Australia wide dealer network, is only a phone call away.

The Warrantor's 2017 Global Sales in Billions of US Dollars

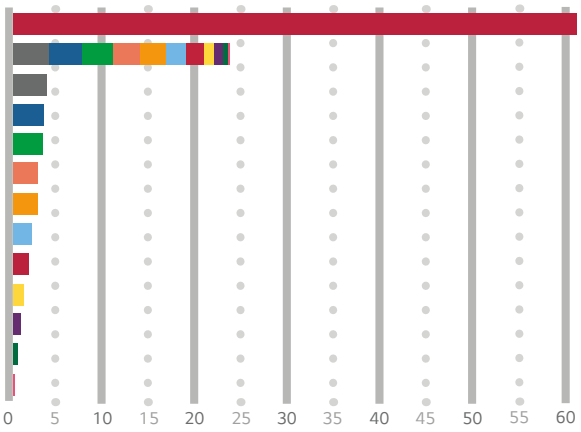

LG Electronics	$61.4bn
All below combined	$23.7bn
Jinko Solar*	$3.9bn
Trina Solar*	$3.5bn
Canadian Solar*	$3.4bn
First Solar*	$2.9bn
JA Solar*	$2.9bn
Hanwha Q Cells*	$2.2bn
Sunpower*	$1.9bn
Yingli*	$1.2bn
Suntech*	$0.9bn
REC Solar*	$0.6bn
Winaico/Win Win Precision Tech*	$0.15bn

*2017 Annual Financial Statements.

HIGHER OUTPUT, HIGHER YIELD

The NeON® Cell produces energy from both the front and the back of the cell. This innovative approach allows the absorption of light from the back of the cell which raises the panel's efficiency and power output. Standard panels only absorb light from the front.

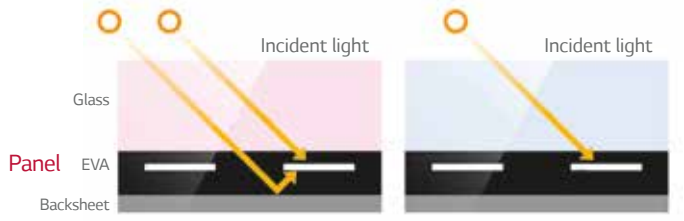

LG NeON® 2 module | Standard module

EXCELLENT QUALITY, THOROUGHLY TESTED

You can rely on LG. We test our products with at least double the intensity specified in the IEC standard. (International Quality Solar Standard).

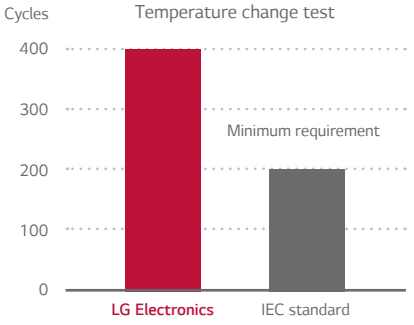

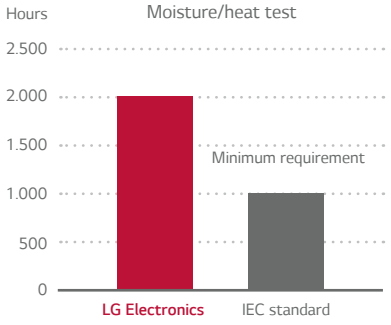

Awards Received By LG Solar™

Our panel range have won a string of International Awards.

GREAT WARRANTY

If you buy an LG panel and should there be a warranty issue you will deal with LG Electronics Australia/NZ. You will not have to worry if the importer is still in operation or the manufacturer is located overseas. We are only one phone call away. LG Electronics Australia/NZ backs your product. That's peace of mind. Contact us on solar.sales@lge.com.au or ph 61-2-88054038.

LG offers a 15 year longer product warranty for parts and labour than many competitors 10 years to an impressive 25 years.

10yrs +15yrs

LG NeON® 2 - 72 Cell

Mechanical Properties

Cells	6 x 12
Cell Vendor	LG
Cell Type	Monocrystalline / N-type
Cell Dimensions	161.7 x 161.7 mm
# of Busbar	12 (Multi Wire Busbar)
Dimensions (L x W x H)	2024 x 1024 x 40 mm
Front Load	5400 Pa
Rear Load	3000 Pa
Weight	20.3 kg
Connector Type	Genuine MC4, IP68 (Male: PV-KST4) (Female: PV-KBT4)
Junction Box	IP68 with 3 bypass diodes
Length of Cables	2 x 1200 mm
Front cover	High transmission tempered glass
Frame	Anodised aluminum

Certifications and Warranty

Certifications	ISO 9001, ISO 14001, ISO 50001
	IEC 61215-1/-1-1/2:2016, IEC 61730-1/-2:2016, UL1703
	OHSAS 1001, PV CYCLE
	IEC 61701:2012 Severity 6 (Salt Mist Corrosion Test)
	IEC 62716:2013 (Ammonia Test)
Module Fire Rating	Class C (UL 790, ULC/ORD C 1703)
Product Warranty	25 Years
Output Warranty of Pmax (Measurement Tolerance ± 3%)	Linear Warranty[1]

[1] 1) 1st year: 98%, 2) After 1st year: 0.35% annual degradation, 3) 89.6% for 25 years

Temperature Characteristics

NMOT	42 ± 3 °C
Pmax	-0.36 %/°C
Voc	-0.26 %/°C
Isc	0.02 %/°C

Characteristic Curves

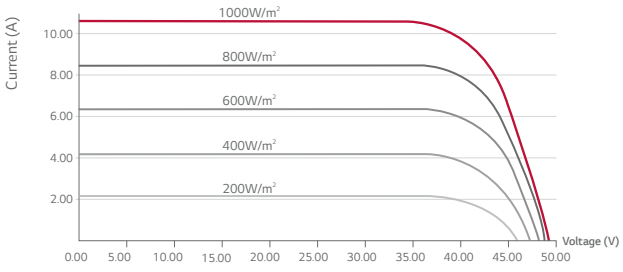

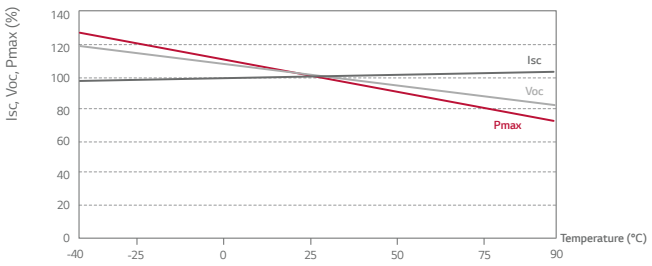

Electrical Properties (STC[2])

Module Type	400 W	405 W
Maximum Power Pmax (W)	400	405
MPP Voltage Vmpp (V)	40.6	41.0
MPP Current Impp (A)	9.86	9.89
Open Circuit Voltage Voc (V)	49.3	49.4
Short Circuit Current Isc (A)	10.47	10.51
Module Efficiency (%)	19.3	19.5
Operating Temperature (°C)	-40 ~ +90	
Maximum System Voltage (V)	1000 (IEC) / 1500 (UL)	
Maximum Series Fuse Rating (A)	20	
Power Tolerance (%)	0 ~ +3	

[2] STC (Standard Test Condition): Irradiance 1000 W/m², Module Temperature 25 °C, AM 1.5.
The nameplate power output is measured and determined by LG Electronics at its sole and absolute discretion.

Electrical Properties (NMOT[3])

Module Type	400 W	405 W
Maximum Power Pmax (W)	300	304
MPP Voltage Vmpp (V)	38.0	38.4
MPP Current Impp (A)	7.88	7.91
Open Circuit Voltage Voc (V)	46.5	46.6
Short Circuit Current Isc (A)	8.40	8.44

[3] NMOT (Nominal Module Operating Temperature): Irradiance 800 W/m², ambient temperature 20 °C, wind speed 1 m/s, Spectrum AM 1.5.

Dimensions (mm)

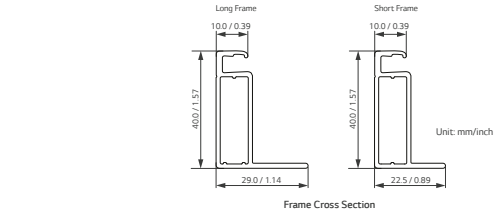

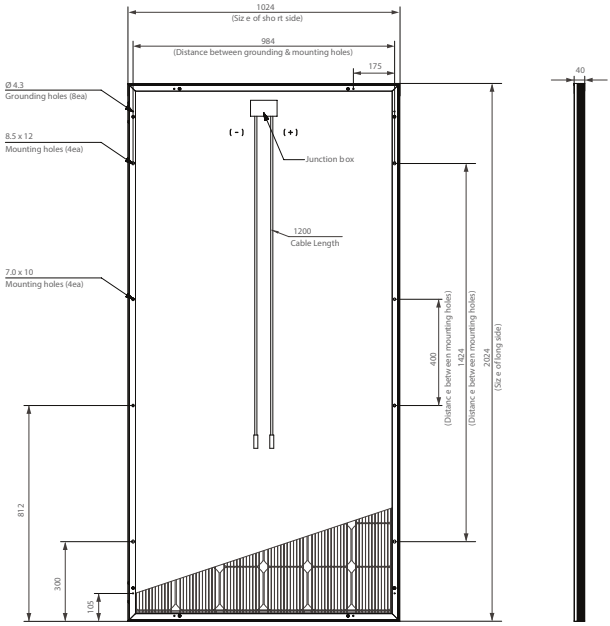

* The distance between the center of the mounting/grounding holes.

LG Life's Good

LG Electronics Australia Pty Ltd
Solar Business Group
2 Wonderland Drive, Eastern Creek, NSW 2766
Ph: (02) 88054038
E-Mail: solar.sales@lge.com.au
Web:lgenergy.com.au

LG Electronics Inc.
Solar Business Division
Twin Building, Western Tower, 11F,
128, Yeoui-daero, Yeongdeungpo-gu,
Seoul, 07336, Korea
www.lg.com/global/business

Product specifications are subject to change without prior notice.
Date: 12/2018

Copyright © 2018 LG Electronics.
All rights reserved.

SB3.0-1SP-US-40 / SB3.8-1SP-US-40 / SB5.0-1SP-US-40 / SB6.0-1SP-US-40
SB7.0-1SP-US-40 / SB7.7-1SP-US-40 / SB3.0-1TP-US-40 / SB3.8-1TP-US-40
SB5.0-1TP-US-40 / SB6.0-1TP-US-40 / SB7.0-1TP-US-40 / SB7.7-1TP-US-40

Value-Added Improvements

- Superior integration with SMA's MLPE Power+ Solution
- World's first Secure Power Supply* now offers up to 2,000 W
- Full grid management capabilities ensure a utility-compliant solution for any market

Reduced Labor

- New Installation Assistant with direct access via smartphone minimizes time in the field
- Advanced communication interface with fewer components creates 50% faster setup and commissioning

Unmatched Flexibility

- SMA's proprietary OptiTrac™ Global Peak technology mitigates shade with ease
- Multiple independent MPPTs accommodate hundreds of stringing possibilities

Trouble-Free Servicing

- Two-part enclosure concept allows for simple, expedited servicing
- Equipped with SMA Smart Connected, a proactive service solution that is integrated into Sunny Portal

SUNNY BOY 3.0-US / 3.8-US / 5.0-US / 6.0-US / 7.0-US / 7.7-US

Reduce costs across your entire residential business model

The residential PV market is changing rapidly. Your bottom line matters more than ever—so we've designed a superior residential solution to help you decrease costs at every stage of your business operations. The Sunny Boy 3.0-US/3.8-US/5.0-US/6.0-US/7.0-US/7.7-US join the SMA lineup of field-proven solar technology backed by the world's #1 service team, along with a wealth of improvements. Simple design, improved stocking and ordering, value-driven sales support and streamlined installation are just some of the ways that SMA helps your business operate more efficiently. And, Sunny Boy's superior integration with the innovative Power+ Solution means installers have even more flexibility in addressing their toughest challenges. Finally, SMA Smart Connected will automatically detect errors and initiate the repair and replacement process so that installers can reduce service calls and save time and money.

Technical data	Sunny Boy 3.0-US		Sunny Boy 3.8-US		Sunny Boy 5.0-US	
	208 V	240 V	208 V	240 V	208 V	240 V
Input (DC)						
Max. PV power	4260 Wp		5396 Wp		7100 Wp	
Max. DC voltage	600 V					
Rated MPP voltage range	155 - 480 V		195 - 480 V		220 – 480 V	
MPPT operating voltage range	100 – 550 V					
Min. DC voltage / start voltage	100 V / 125 V					
Max. operating input current per MPPT	10 A					
Max. short circuit current per MPPT	18 A					
Number of MPPT tracker / string per MPPT tracker	2/1				3 / 1	
Output (AC)						
AC nominal power	3000 W	3000 W	3330 W	3800 W	5000 W	5000 W
Max. AC apparent power	3000 VA	3000 VA	3330 VA	3800 VA	5000 VA	5000 VA
Nominal voltage / adjustable	208 V / ●	240 V / ●	208 V / ●	240 V / ●	208 V / ●	240 V / ●
AC voltage range	183 – 229 V	211 – 264 V	183 – 229 V	211 – 264 V	183 – 229 V	211 – 264 V
AC grid frequency	60 Hz / 50 Hz					
Max. output current	14.5 A	12.5 A	16.0 A	16.0 A	24.0 A	24.0 A
Power factor (cos φ)	1					
Output phases / line connections	1 / 2					
Harmonics	< 4 %					
Efficiency						
Max. efficiency	97.2 %	97.6 %	97.2 %	97.5 %	97.2 %	97.5 %
CEC efficiency	96 %	96.5 %	96.5 %	96.5 %	96.5 %	97 %
Protection devices						
DC disconnect device / DC reverse polarity protection	● / ●					
Ground fault monitoring / Grid monitoring	●					
AC short circuit protection	●					
All-pole sensitive residual current monitoring unit (RCMU)	●					
Arc fault circuit interrupter (AFCI)	●					
Protection class / overvoltage category	I / IV					
General data						
Dimensions (W / H / D) in mm (in)	535 x 730 x 198 (21.1 x 28.5 x 7.8)					
Packaging dimensions (W / H / D) in mm (in)	600 x 800 x 300 (23.6 x 31.5 x 11.8)					
Weight / packaging weight	26 kg (57 lb) / 30 kg (66 lb)					
Temperature range: operating / non-operating	-25°C ...+60°C / -40°C ...+60°C					
Environmental protection rating	NEMA 3R					
Noise emission (typical)	39 dB(A)					
Internal power consumption at night	< 5 W					
Topology / Cooling concept	Transformerless / Convection					
Features						
Ethernet ports	2					
Secure Power Supply	●*					
Display (2 x 16 characters)	●					
WLAN / Sensor module / External WLAN antenna	● / ○ / ○					
Cellular (4G / 3G) / Revenue Grade Meter	○ / ○**					
Warranty: 10 / 15 / 20 years	●/○/○					
Certificates and approvals	UL 1741, UL 1741 SA incl. Rule 21 RSD, UL 1998, UL 1699B, IEEE1547, FCC Part 15 (Class A & B), CAN/CSA V22.2 107.1-1, HECO SRD-UL-1741-SA-V1.1					
● Standard features ○ Optional features – Not available Data at nominal conditions						
NOTE: US inverters ship with gray lids. * Not compatible with the Power+ Solution Shutdown functionality **Standard in SBX.X-1TP-US-40						
Type designation	SB3.0-1SP-US-40 / SB3.0-1TP-US-40		SB3.8-1SP-US-40 / SB3.8-1TP-US-40		SB5.0-1SP-US-40 / SB5.0-1TP-US-40	

Accessories

Sensor module
MD.SEN-US-40

External WLAN antenna
EXTANT-US-40

SMA Rooftop
Communication Kit
ROOFCOMMKIT-P2-US

Revenue Grade
Meter Kit
RGM05KIT-US-10

Cellular Modem Kit
CELLMODKIT-US-10

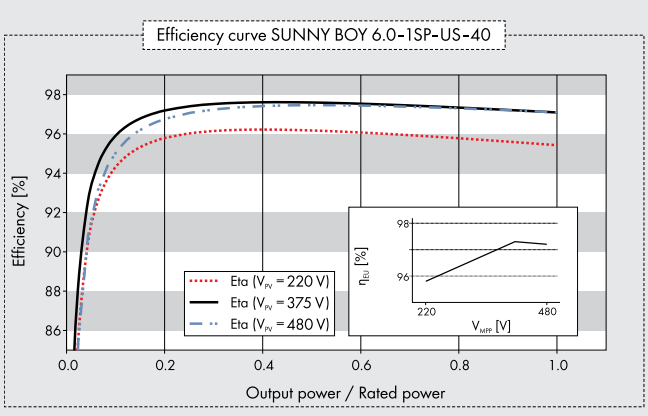

Technical data	Sunny Boy 6.0-US		Sunny Boy 7.0-US		Sunny Boy 7.7-US	
	208 V	240 V	208 V	240 V	208 V	240 V
Input (DC)						
Max. PV power	8520 Wp		9940 Wp		10905 Wp	
Max. DC Voltage	600 V					
Rated MPP Voltage range	220 – 480 V		245 - 480 V		270 - 480 V	
MPPT operating voltage range	100 – 550 V					
Min. DC voltage / start voltage	100 V / 125 V					
Max. operating input current per MPPT	10 A					
Max. short circuit current per MPPT	18 A					
Number of MPPT tracker / string per MPPT tracker	3 / 1					
Output (AC)						
AC nominal power	5200 W	6000 W	6660 W	7000 W	6660 W	7680 W
Max. AC apparent power	5200 VA	6000 VA	6660 VA	7000 VA	6660 VA	7680 VA
Nominal voltage / adjustable	208 V / ●	240 V / ●	208 V / ●	240 V / ●	208 V / ●	240 V / ●
AC voltage range	183 – 229 V	211 – 264 V	183 – 229 V	211 – 264 V	183 – 229 V	211 – 264 V
AC grid frequency	60 Hz / 50 Hz					
Max. output current	25.0 A	25.0 A	32.0 A	29.2 A	32.0 A	32.0 A
Power factor (cos φ)	1					
Output phases / line connections	1 / 2					
Harmonics	< 4 %					
Efficiency						
Max. efficiency	97.2 %	97.6 %	97.1 %	97.5 %	97.1 %	97.5 %
CEC efficiency	96.5 %	97 %	96.5 %	97 %	96.5 %	97 %
Protection devices						
DC disconnect device / DC reverse polarity protection	● / ●					
Ground fault monitoring / Grid monitoring	●					
AC short circuit protection	●					
All-pole sensitive residual current monitoring unit (RCMU)	●					
Arc fault circuit interrupter (AFCI)	●					
Protection class / overvoltage category	I / IV					
General data						
Dimensions (W / H / D) in mm (in)	535 x 730 x 198 (21.1 x 28.5 x 7.8)					
Packaging Dimensions (W / H / D) in mm (in)	600 x 800 x 300 (23.6 x 31.5 x 11.8)					
Weight / packaging weight	26 kg (57 lb) / 30 kg (66 lb)					
Temperature range: operating / non-operating	-25°C ...+60°C / -40°C ...+60°C					
Environmental protection rating	NEMA 3R					
Noise emission (typical)	39 dB(A)		45 dB(A)			
Internal power consumption at night	< 5 W					
Topology / Cooling concept	Transformerless / Convection		Transformerless / Fan			
Features						
Ethernet ports	2					
Secure Power Supply	●*					
Display (2 x 16 characters)	●					
WLAN / Sensor module / External WLAN antenna	● / o / o					
Cellular (4G / 3G) / Revenue Grade Meter	o / o**					
Warranty: 10 / 15 / 20 years	●/o/o					
Certificates and approvals	UL 1741, UL 1741 SA incl. Rule 21 RSD, UL 1998, UL 1699B, IEEE1547, FCC Part 15 (Class A & B), CAN/CSA V22.2 107.1-1, HECO SRD-UL-1741-SA-V1.1					
● Standard features o Optional features – Not available Data at nominal conditions NOTE: US inverters ship with gray lids. * Not compatible with the Power+ Solution Shutdown functionality						
NOTE: US inverters ship with gray lids. * Not compatible with the Power+ Solution Shutdown functionality **Standard in SBX.X-1TP-US-40						
Type designation	SB6.0-1SP-US-40 / SB6.0-1TP-US-40		SB7.0-1SP-US-40 / SB7.0-1TP-US-40		SB7.7-1SP-US-40 / SB7.7-1TP-US-40	

POWER+ SOLUTION

The SMA Power+ Solution combines legendary SMA inverter performance and intelligent DC module-level electronics in one cost-effective, comprehensive package. This means that you can achieve maximum solar power production for your customers while also realizing significant installation savings.

NEW! Advanced communication interface allows for 50% faster setup and commissioning thanks to reduced components and a simplified process.

Visit www.SMA-America.com for more information.

SIMPLE, FLEXIBLE DESIGN

Speed the completion of customer proposals and maximize the efficiency of your design team with the Sunny Boy-US series, which provides a new level of flexibility in system design by offering:

» Hundreds of stringing configurations and multiple independent MPPTs

» SMA's proprietary OptiTrac™ Global Peak shade mitigation technology

» Diverse application options including on- and off-grid compatibility

VALUE-DRIVEN SALES ENABLEMENT

SMA wants to enable your sales team by arming them with an abundance of feature/benefit support. Show your customers the value of the Sunny Boy-US series by utilizing:

» Secure Power Supply, now with 2,000 W of opportunity power in the event of a grid outage, as an increased value-add or upsell opportunity

» SMA's 35 year history and status as the #1 global inverter manufacturer instills homeowners with peace of mind and the long-term security they demand from a PV investment

» An economical solution for shade mitigation and the challenges of complex roofs

IMPROVED STOCKING AND ORDERING

Ensure that your back office business operations run smoothly and succinctly while mitigating potential errors. The Sunny Boy-US series can help achieve cost savings in these areas by providing:

» An integrated DC disconnect that simplifies equipment stocking and allows for a single inverter part number

» All communications integrated into the inverter, eliminating the need to order additional equipment

STREAMLINED INSTALLATION AND COMMISSIONING

Expedite your operations in the field by taking advantage of the new Sunny Boy's installer-friendly feature set including:

» Direct access via smartphone and utilization of SMA's Installation Assistant, which minimizes time/labor spent in the field and speeds the path to commissioning

» Simple commissioning and monitoring setup in a single online portal

» New! Advanced communication interface with fewer components allows for 50% faster commissioning

SUPERIOR SERVICE

SMA understands the factors that contribute to lifetime PV ownership cost, that's why the Sunny Boy-US series was designed for maximum reliability and backstopped by an unmatched service offering. Benefit from:

» SMA Smart Connected, a proactive service solution integrated into Sunny Portal that automatically detects errors and initiates the repair and replacement process

» The #1 service team in the PV industry, as recognized by IMS research, with experience servicing an installed base of more than 55 GW

SB3.0-7-US-DUS184327 SMA and Sunny Boy are registered trademarks of SMA Solar Technology AG. Printed on FSC-certified paper. All products and services described as well as technical data are subject to change, even for reasons of country-specific deviations, at any time without notice. SMA assumes no liability for errors or omissions. For current information, see www.SMA-Solar.com.

ROCK GAP
Energy Services

E[redacted] A[redacted]

C[redacted]

[redacted]

[redacted]

[redacted]

[redacted]

[redacted]

M[redacted]

New Mexico
3737 Princeton St NE, Ste 100, Albuquerque, NM 87107
T: (505) 344.2366 ◆ F: (505) 213.0563

Arizona
1921 S. Alma School Road Ste. 212, AZ 85210
T: (480) 834.5717 ◆ F: (480) 834.5718

Table of Contents

Executive Summary 3

1.0 Introduction 5

2.0 Facility Description 9

3.0 Historical Energy Consumption Analysis 14

4.0 Summary of Potential Energy Savings by System 22

5.0 Energy Conservation Measures 28

6.0 Measures for Future Consideration 40

7.0 Measures Not Feasible 44

8.0 Next Steps 44

APPENDICES

Appendix 1 Calculations and Cost Estimates

E[illegible]

[illegible] [illegible] [illegible] [

[illegible] [illegible] [illegible] [

[redacted] I[redacted]

I[redacted] EC[redacted] G[redacted] E[redacted] C[redacted] A[redacted] ECM[redacted]

[redacted] E[redacted] C[redacted] M[redacted] [redacted]

[redacted] E[redacted] C[redacted] M[redacted] ECM[redacted]

A[redacted] GHG[redacted]

ROCK GAP
Energy Services

[illegible]

ECM #	[illegible]	[illegible]	[illegible]	[illegible]	[illegible]	[illegible]	[illegible]	[illegible]	[illegible]	[illegible]	[illegible]	[illegible]	[illegible]	[illegible]	[illegible]
[illegible]	[illegible]	[illegible]	[illegible]	[illegible]	[illegible]	[illegible]	[illegible]	[illegible]	[illegible]	[illegible]	[illegible]	[illegible]	[illegible]	[illegible]	[illegible]
[illegible]	[illegible]	[illegible]	[illegible]	[illegible]	[illegible]	[illegible]	[illegible]	[illegible]	[illegible]	[illegible]	[illegible]	[illegible]	[illegible]	[illegible]	[illegible]
[illegible]	[illegible]	[illegible]	[illegible]	[illegible]	[illegible]	[illegible]	[illegible]	[illegible]	[illegible]	[illegible]	[illegible]	[illegible]	[illegible]	[illegible]	[illegible]
[illegible]	[illegible]	[illegible]	[illegible]	[illegible]	[illegible]	[illegible]	[illegible]	[illegible]	[illegible]	[illegible]	[illegible]	[illegible]	[illegible]	[illegible]	[illegible]
[illegible]	[illegible]	[illegible]	[illegible]	[illegible]	[illegible]	[illegible]	[illegible]	[illegible]	[illegible]	[illegible]	[illegible]	[illegible]	[illegible]	[illegible]	[illegible]
[illegible]	[illegible]	[illegible]	[illegible]	[illegible]	[illegible]	[illegible]	[illegible]	[illegible]	[illegible]	[illegible]	[illegible]	[illegible]	[illegible]	[illegible]	[illegible]
[illegible]	[illegible]	[illegible]	[illegible]	[illegible]	[illegible]	[illegible]	[illegible]	[illegible]	[illegible]	[illegible]	[illegible]	[illegible]	[illegible]	[illegible]	[illegible]
[illegible]	[illegible]	[illegible]	[illegible]	[illegible]	[illegible]	[illegible]	[illegible]	[illegible]	[illegible]	[illegible]	[illegible]	[illegible]	[illegible]	[illegible]	[illegible]

EVALUATED BUT NOT RECOMMENDED ECM SUMMARY

ECM #	[illegible]	[illegible]	[illegible]	[illegible]	[illegible]	[illegible]	[illegible]	[illegible]	[illegible]	[illegible]	[illegible]	[illegible]	[illegible]	[illegible]	[illegible]
[illegible]	[illegible]	[illegible]	[illegible]	[illegible]	[illegible]	[illegible]	[illegible]	[illegible]	[illegible]	[illegible]	[illegible]	[illegible]	[illegible]	[illegible]	[illegible]
[illegible]	[illegible]	[illegible]	[illegible]	[illegible]	[illegible]	[illegible]	[illegible]	[illegible]	[illegible]	[illegible]	[illegible]	[illegible]	[illegible]	[illegible]	[illegible]
[illegible]	[illegible]	[illegible]	[illegible]	[illegible]	[illegible]	[illegible]	[illegible]	[illegible]	[illegible]	[illegible]	[illegible]	[illegible]	[illegible]	[illegible]	[illegible]
[illegible]	[illegible]	[illegible]	[illegible]	[illegible]	[illegible]	[illegible]	[illegible]	[illegible]	[illegible]	[illegible]	[illegible]	[illegible]	[illegible]	[illegible]	[illegible]

Savings Summary	Energy Cost ($/yr)	Electric (kWh/year)	Electric Demand (kW)	Natural Gas (therms/year)	Water (gal/year)	Mg CO2-e (metric tons)
Savings	$91,447	870,454	132	6,121	177,116	445
Annual Use	$357,382	2,958,912	665	73,865	N/A	1,793
% Reduction	**25.6%**	**29.4%**	**19.8%**	**8.3%**	**N/A**	**24.8%**
New Annual Use	$265,935	2,088,458	534	67,744	N/A	1,349
Cost savings by fuel		$56,579	$28,657	$4,970	$1,240	

[illegible]

Utility	Energy Conversion		GHG Emissions	
	Unit	to Btu	Mg (Metric Tons)	Unit
Electric	kWh	3,412	0.0004734	CO2e/kWh
Natural Gas	therm	100,000	0.0053060	CO2e/therm

[illegible] E[illegible] A[illegible]

[illegible] [illegible] [illegible] [

D

A

M

2 Facility Description

This section of the report provides a description of the building and its major energy consuming systems.

2.1 Building Description

The Casino of the Sun has a total floor area of approximately 70,000 square feet. NORESCO calculated the facility's floor area by utilizing an online roof area tool (https://www.mapdevelopers.com/area_finder.php). This tool was used in lieu of the square footage provided in the RFP documents of 15,795 sq.ft. due to the fact that the building is visibly much larger than 15,795 sq.ft.

The Casino first opened in 1996. It is open 24 hours per day. It is made up of two (2) stories. Spaces include the main gaming floor, a restaurant, kichen, offices, and storage.

The exterior walls are tan stucco. The few windows are generally fixed aluminum frames with insulated glazing. The roof is a flat roof wih a white membranet.

The HVAC systems include:

- Four (4) Air Handling Units
- One (1) natural gas fired boiler
- Two (2) air cooled chillers

2.2 Recent and Planned Projects

There are no known relevant recent or planned projects at this facility.

2.3 Equipment Description

2.3.1 Air Handling Units

The building is conditoned by four (4) Trane Air Handling Units (AHUs) serving VAV boxes. AHUs 1-3 are 100% outdoor air units wih variable speed fans, hot water heatng coils, and chilled water cooling coils. AHUs 1-3 serve the main gaming floor. In addition to these AHUs, the gaming floor is served by three separate variable speed exhaust fans located on the roof. The variable speed drive for each of the exhaust fans tracks an associated AHU supply fan speed.

AHU 4 is a conventional variable air volume air handling unit wih a variable speed supply fan, chilled water coils, and an outdoor air economizer with RA and OA dampers. AHU 4 does not have a heatng coil and relies on the VAV terminals to provide all of the heatng to the space. AHU 4 serves the back of house areas including the offces and storage areas.

In addition to the four main AHUs, there are four (4) Trane single zone packaged roof top units. These unis have constant volume fans, dx cooling, and furnaces for heating. The packaged RTUs serve miscellaneous areas such as offices, food storage, and storage areas.

The age of the AHUs and RTUs is unknown, however they are most likely original implying that they are 22 years old. The AHUs and RTUs generally appear to be in fair-poor condition and are likely approaching end of life.

F[illegible] [illegible]A[illegible] H[illegible] [illegible]

[illegible] H[illegible] [illegible]

H[illegible] [illegible] [illegible] [illegible] [illegible] A[illegible] [illegible] [illegible] [illegible] [

F[illegible] [illegible]H[illegible] [illegible]B[illegible]

[illegible] C[illegible] [illegible]

C[illegible] [illegible] [illegible] [

H AC C

DDC AH A J C M D

F C

L

CFL L

E

F[illegible] G[illegible] F[illegible] L[illegible]

[illegible] D[illegible] H[illegible]

D[illegible]

[illegible] E[illegible]

[illegible]

F[illegible] E[illegible] G[illegible]

[redacted] H[redacted] E[redacted] C[redacted] [redacted] A[redacted]

[redacted] [redacted] [redacted] [

[illegible] E[illegible] C[illegible] [illegible] D[illegible] [illegible] L[illegible] F[illegible]

[illegible] [illegible] [illegible] [

C[illegible] J[illegible] D[illegible]

G[illegible] E[illegible] D[illegible]

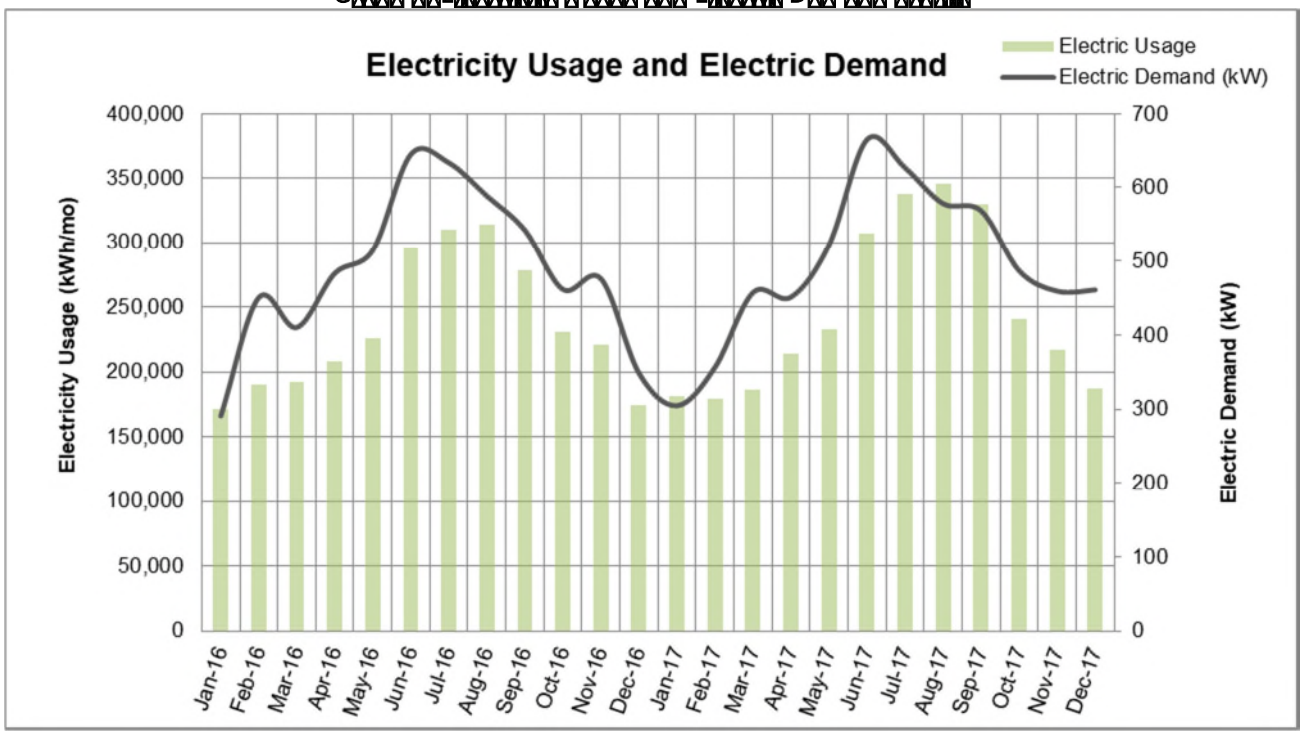
Electricity Usage and Electric Demand
Electric Usage
Electric Demand (kW)
Electricity Usage (kWh/mo)
Electric Demand (kW)
400,000
350,000
300,000
250,000
200,000
150,000
100,000
50,000
0
700
600
500
400
300
200
100
0
Jan-16
Feb-16
Mar-16
Apr-16
May-16
Jun-16
Jul-16
Aug-16
Sep-16
Oct-16
Nov-16
Dec-16
Jan-17
Feb-17
Mar-17
Apr-17
May-17
Jun-17
Jul-17
Aug-17
Sep-17
Oct-17
Nov-17
Dec-17

[illegible] J[illegible] D[illegible]

G[illegible] L[illegible] F[illegible]

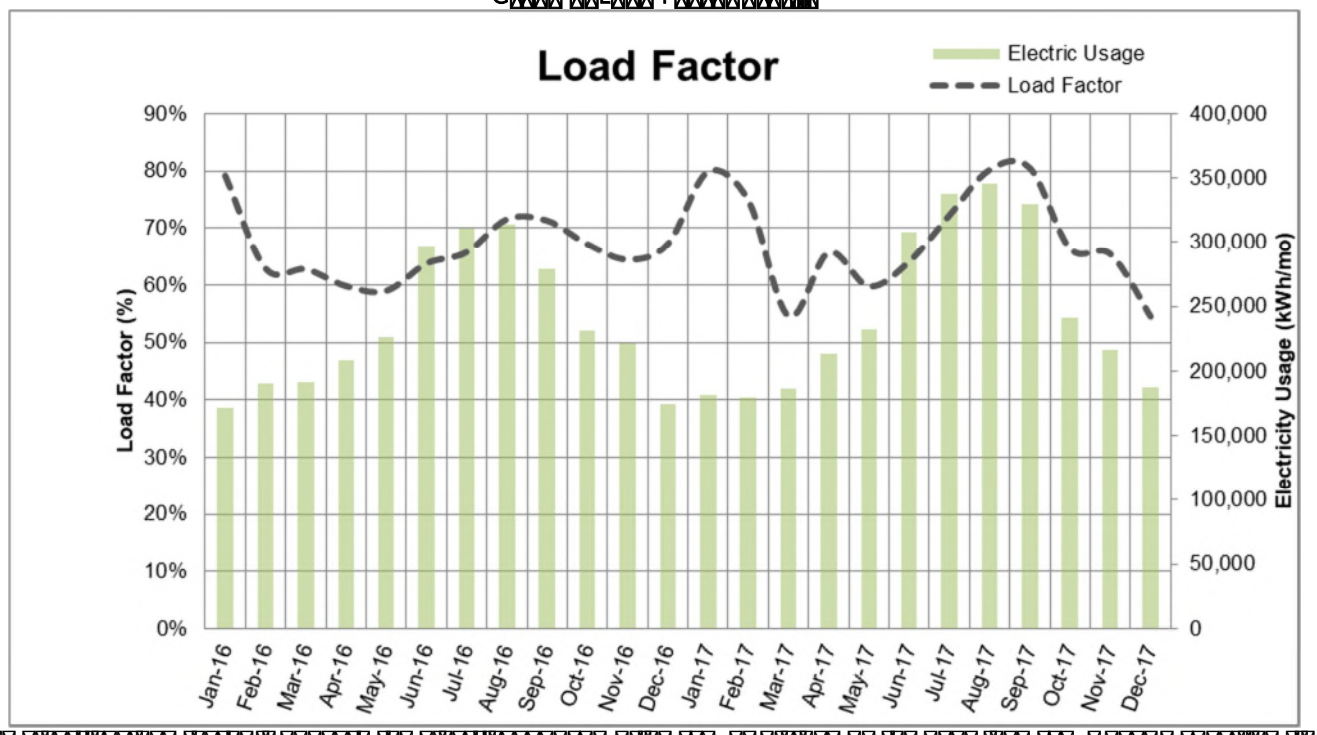
Load Factor
Electric Usage
Load Factor
Load Factor (%)
Electricity Usage (kWh/mo)
90%
80%
70%
60%
50%
40%
30%
20%
10%
0%
400,000
350,000
300,000
250,000
200,000
150,000
100,000
50,000
0
Jan-16
Feb-16
Mar-16
Apr-16
May-16
Jun-16
Jul-16
Aug-16
Sep-16
Oct-16
Nov-16
Dec-16
Jan-17
Feb-17
Mar-17
Apr-17
May-17
Jun-17
Jul-17
Aug-17
Sep-17
Oct-17
Nov-17
Dec-17

[illegible] [illegible] [illegible] [

[illegible] G[illegible] C[illegible] [illegible]

[illegible] J[illegible] D[illegible]

G[illegible] G[illegible]

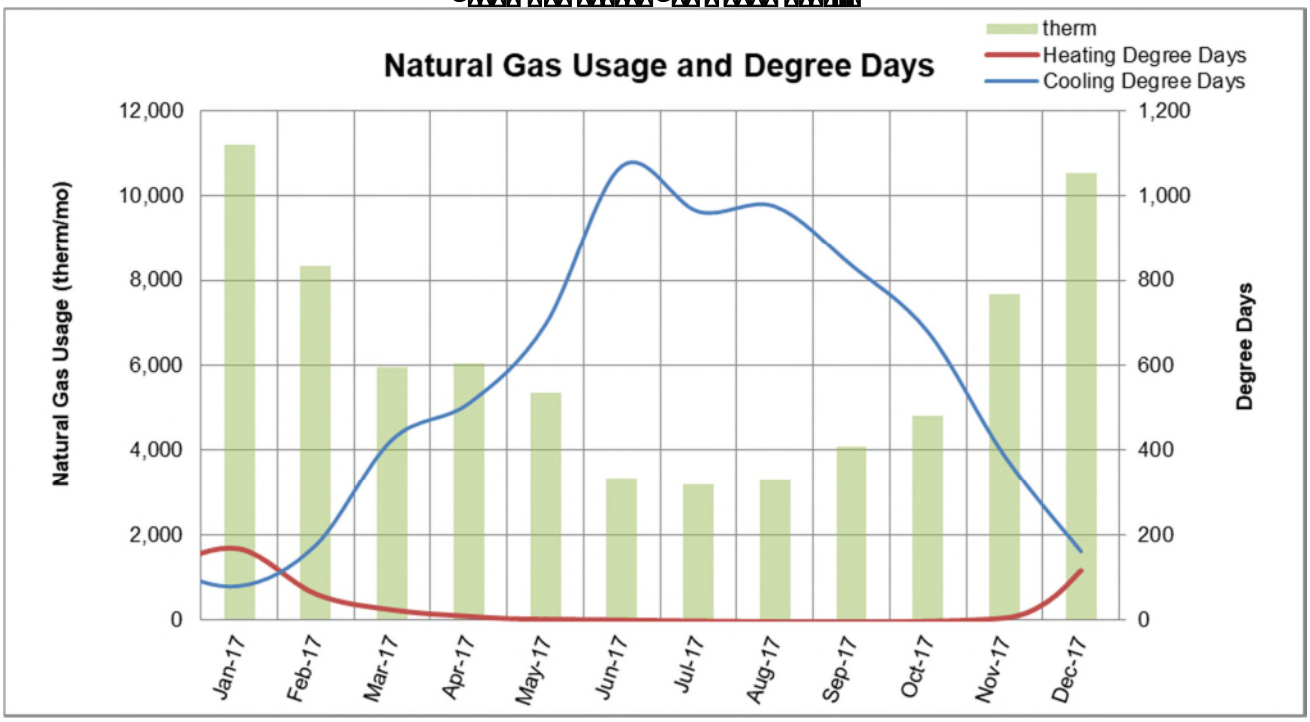

E[illegible] I[illegible]

E[illegible] E[illegible] F[illegible]

[illegible] E[illegible] I[illegible] B[illegible] C[illegible]

Energy Consumption			
Energy Source			kBtu
Electric	2,958,912	kWh	10,095,808
Natural Gas	73,865	therm	7,386,500
Total	17,482,308		kBtu
Bldg. Area	70,000	ft^2	
EUI	**249.7**	**(kBtu/ft2/ Yr)**	

[illegible] E[illegible] D[illegible]

[illegible] E[illegible] D[illegible] F[illegible]

[illegible] C[illegible]

G[illegible] E[illegible] D[illegible]

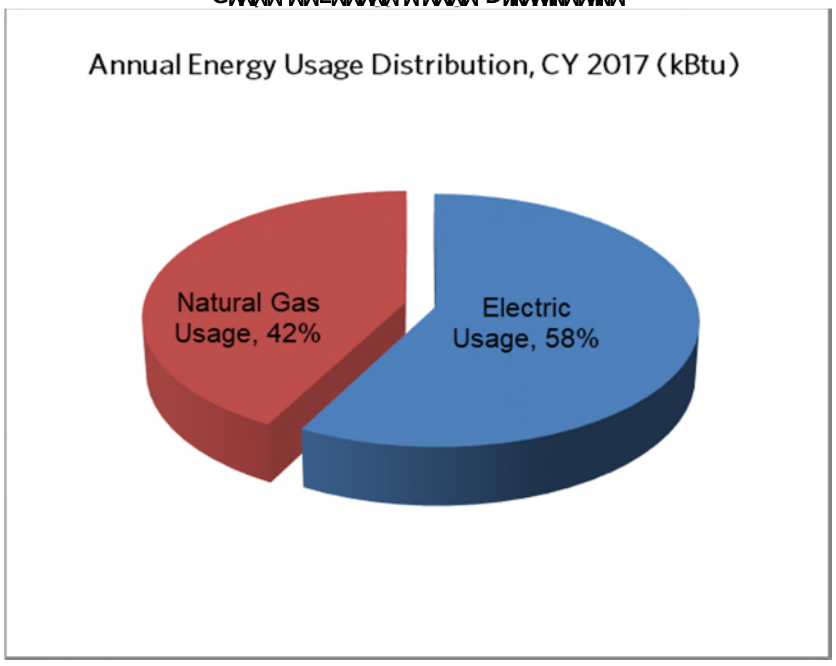

[illegible] E[illegible] C[illegible] D[illegible] F[illegible]

D[illegible] F[illegible] C[illegible]

G[illegible] E[illegible] C[illegible] D[illegible]

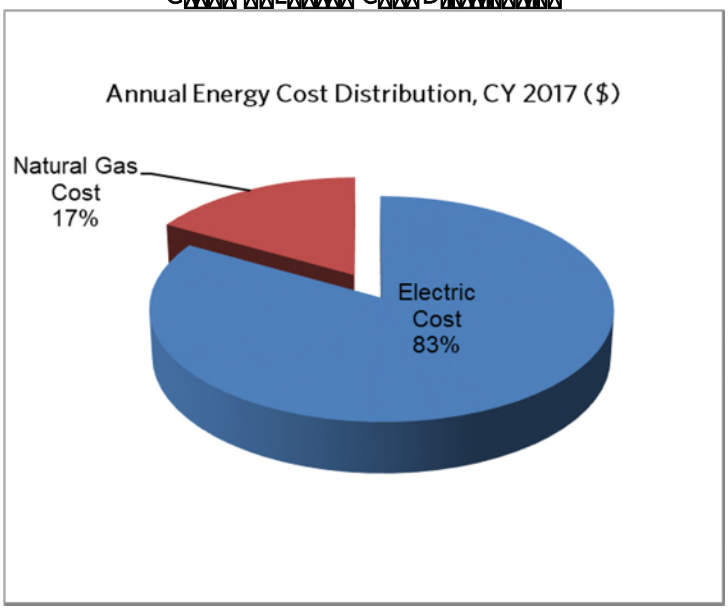
Annual Energy Cost Distribution, CY 2017 ($)
Natural Gas Cost 17%
Electric Cost 83%

[illegible] E[illegible] E[illegible] [illegible] [illegible] [illegible] M[illegible] E[illegible] C[illegible] [illegible]

[illegible] [illegible] [illegible] [

[illegible]

End Use	Electric (kWh/yr)	Natural Gas (therm/yr)	Total Site Energy Use (MMBtu/yr)	% of Total Electric Usage	% of Total Natural Gas Usage	% of Total Energy Usage
Space Heating	0	34,465	3,447	0%	47%	20%
Space Cooling	1,208,394	0	4,123	41%	0%	24%
Air Distribution (Fans)	854,746	0	2,916	29%	0%	17%
Water Distribution (Pumps)	130,360	0	445	4%	0%	3%
DHW	0	31,520	3,152	0%	43%	18%
Conveyance	0	0	0	0%	0%	0%
Lighting	220,360	0	752	8%	0%	4%
Plug Loads	495,488	0	1,691	17%	0%	10%
Process Loads	0	0	0	0%	0%	0%
Refrigeration	6,100	0	21	0%	0%	0%
Cooking	0	7,880	788	0%	11%	5%
Information Technology	20,931	0	71	1%	0%	0%
Other	0	0	0	0%	0%	0%
Total	**2,936,379**	**73,865**	**17,405**	**100%**	**100%**	**100%**

[illegible] E[illegible]

[illegible] ECM[illegible]

E[illegible]

[illegible] ECM[illegible]

G[illegible] E[illegible] D[illegible]

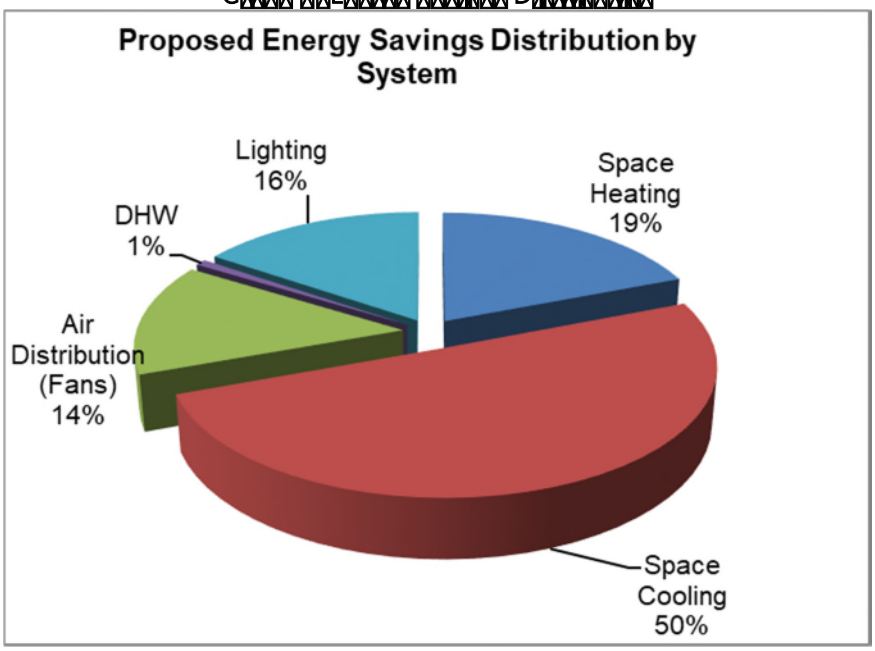

[illegible] ECM[illegible]

[illegible] E[illegible] D[illegible]

		Space Heating		Space Cooling		Air Distribution (Fans)	Water Distribution (Pumps)	DHW		Lighting
ECM #	Measure Name	Electric Savings (kWh/yr)	Natural Gas Savings (therms/yr)	Electric Savings (kWh/yr)	Natural Gas Savings (therms/yr)	Electric Savings (kWh/yr)	Electric Savings (kWh/yr)	Electric Savings (kWh/yr)	Natural Gas Savings (therms/yr)	Electric Savings (kWh/yr)
1	ECM-1: Interior Lighting Upgrade	0	-532	0	0	0	0	0	0	57,891
2	ECM-2: Retro -Commissioning	0	5,540	122,055	0	99,863	0	0	0	0
3	ECM-3: Exterior Lighting Upgrade	0	0	0	0	0	0	0	0	82,026
4	ECM-4: Kitchen Exhaust VFD	0	876	0	0	28,325	0	0	0	0
5	ECM-5: Low Flow Fixtures	0	0	0	0	0	0	0	237	0
6	ECM-6: Solar PV	0	0	0	0	0	0	0	0	0
7	ECM-7: Replace Chillers	0	0	331,488	0	0	0	0	0	0
Annual Total Savings		0	5,884	453,543	0	128,188	0	0	237	139,917

		Space Heating		Space Cooling		Air Distribution (Fans)	Water Distribution (Pumps)	DHW		Lighting
ECM #	Measure Name	Electric Savings (kWh/yr)	Natural Gas Savings (therms/yr)	Electric Savings (kWh/yr)	Natural Gas Savings (therms/yr)	Electric Savings (kWh/yr)	Electric Savings (kWh/yr)	Electric Savings (kWh/yr)	Natural Gas Savings (therms/yr)	Electric Savings (kWh/yr)
8	ECM-8: Occupancy Sensors	0	-37	0	0	0	0	0	0	3,981
9	ECM-9: Install VFD for CHW Pumps	0	0	0	0	0	35,347	0	0	0
10	ECM-10: Replace Boiler	0	5,901	0	0	0	0	0	0	0
Annual Total Savings		0	5,865	0	0	0	35,347	0	0	3,981

[illegible] *E[illegible]* [illegible] *GHG*[illegible]

[illegible] C[illegible] [illegible] E[illegible] A[illegible]

I[illegible] ECM[illegible] C[illegible] [illegible] [illegible] [illegible] [illegible] [illegible] [illegible] [illegible] [illegible] [illegible]

[illegible] [illegible] [illegible] [illegible] [illegible]

Annual Energy Usage	Existing	Proposed	Unit	Existing Cost	Proposed Cost	% Savings
Electricity	2,958,912	2,088,458	kWh	$192,046	$135,466	29.4%
Summer Peak kW	665	534	kW	$105,363	$76,706	19.8%
Winter Peak kW	569	437	kW			23.2%
Natural Gas	73,865	67,744	therm	$59,973	$55,002	8.3%
Metric Tons CO_2e	1,793.1	1,348.6	$MgCO_2e$	NA	NA	24.8%
				$357,382	**$265,935**	**25.6%**

A[illegible] ECM[illegible] [illegible] [illegible] [illegible] [illegible] [illegible] [illegible] [illegible] [illegible] [illegible] [illegible] [illegible] [illegible] [illegible] [illegible]

G[illegible] [illegible] E[illegible] [illegible] D[illegible]

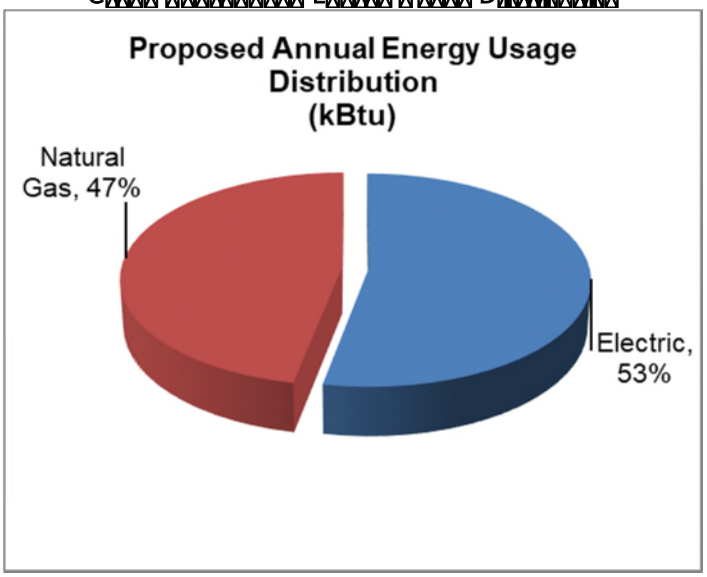

[illegible] K[illegible] [illegible] [illegible] I[illegible]

[illegible] [illegible] [illegible] [illegible] K[illegible] [illegible] [illegible] [illegible] [illegible] [illegible] [illegible] [illegible] [illegible] [illegible] [illegible] [illegible] ECM[illegible] K[illegible] [illegible] [illegible] [illegible] [illegible] [illegible] [illegible] [illegible] [illegible] [illegible] [illegible] [illegible] [illegible] [illegible] [

[illegible] [illegible] E[illegible] [illegible] I[illegible] [illegible] [illegible]

	Annual Energy Cost per Square Foot ($ / sq ft-yr)	Site EUI (kBtu / sq ft-yr)	Annual Energy Cost ($ / yr)
Existing (CY 2017)	$5.11	249.7	$357,382
Proposed	$3.80	204.3	$265,935
% Savings	25.6%	18.2%	25.6%

[illegible] E[illegible] I[illegible] [illegible] [illegible] [illegible] E[illegible] I[illegible] [illegible] [illegible] [illegible] [illegible] ECM[illegible] [illegible] [illegible] [illegible] [illegible] [illegible]

G[illegible] [illegible] E[illegible] [illegible] I[illegible] [illegible]

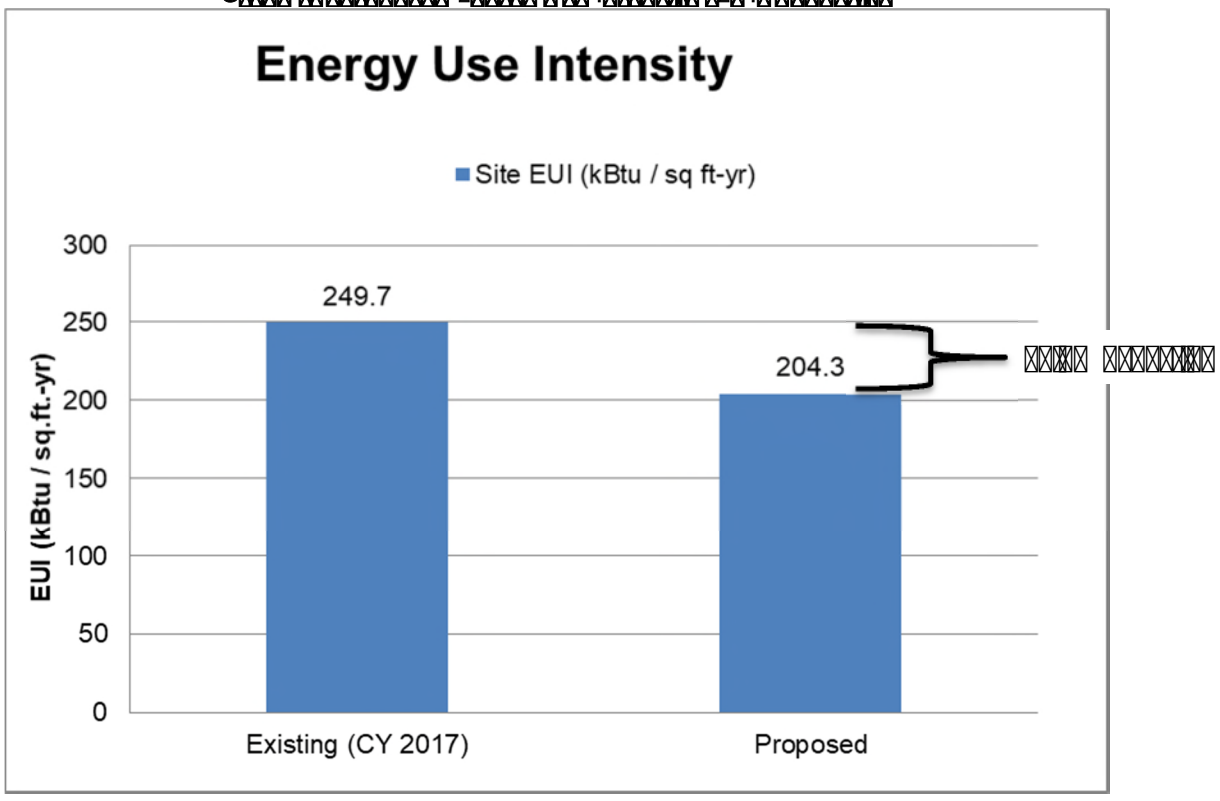

[illegible] [illegible] [illegible] [

[illegible] [illegible] E[illegible] [illegible] [illegible] [illegible]

End Uses Type	Existing Annual Energy Use			Proposed Annual Energy Use			% Reduction
	Electric (kWh/yr)	Natural Gas (therm/yr)	Total Site Energy Use (MMBtu/yr)	Electric (kWh/yr)	Natural Gas (therm/yr)	Total Site Energy Use (MMBtu/yr)	
Space Heating	0	34,465	3,447	0	28,581	2,858	17%
Space Cooling	1,208,394	0	4,123	754,851	0	2,576	38%
Air Distribution (Fans)	854,746	0	2,916	726,558	0	2,479	15%
Water Distribution (Pumps)	130,360	0	445	130,360	0	445	0%
DHW	0	31,520	3,152	0	31,283	3,128	1%
Lighting	212,477	0	725	72,559	0	248	66%
Plug Loads	495,488	0	1,691	495,488	0	1,691	0%
Refrigeration	6,100	0	21	6,100	0	21	0%
Cooking	0	7,880	788	0	7,880	788	0%
Information Technology	20,931	0	71	20,931	0	71	0%
Total Estimated	2,928,495	73,865	17,379	2,206,847	67,744	14,304	18%
Total per Sq-ft	41.8	1.1	0.2	31.5	1.0	0.2	

[illegible] E[illegible] C[illegible] M[illegible]

[illegible] [illegible] EC[illegible] [illegible] [illegible] [

F[illegible] G[illegible] F[illegible] L[illegible]

Recommendation

[illegible] EC[illegible] [illegible] LED [illegible]

L[illegible] LED [illegible] [illegible]

L[illegible] LED [illegible] [illegible] [illegible]

[illegible] ECM [illegible] [illegible] LED [illegible]

- [illegible]
- [illegible] CFL[illegible]
- [illegible]
- [illegible]
- [illegible] HID [illegible]

Interactive Effects

[illegible] E[illegible]

[illegible] ECM [illegible]

Economic Summary

ECM[illegible]
E[illegible]
A[illegible] M[illegible] D[illegible]
[illegible]G[illegible]
E[illegible]
E[illegible] I[illegible]
[illegible]
GHG E[illegible]

Existing Condition

[illegible]

[illegible]

[illegible]

F[illegible] D[illegible]

[illegible]

M[illegible] H[illegible] H[illegible]

F[illegible] E[illegible] A[illegible]

M[illegible] C[illegible]

F[illegible] E[illegible] A[illegible]

F[illegible] D[illegible] A[illegible]

F[illegible] D[illegible] H[illegible] A[illegible]

Recommendation

[illegible] H[illegible]

[illegible] M[illegible]

[illegible]

ROCK GAP Energy Services

[illegible] [illegible] [illegible] [

[redacted] ECM [redacted] E[redacted] L[redacted] [redacted]

Economic Summary

ECM[redacted] [redacted]
E[redacted] [redacted] [redacted]
A[redacted] M[redacted] D[redacted] [redacted] [redacted]
[redacted] G[redacted] [redacted] [redacted]
E[redacted] [redacted] C[redacted] [redacted]
E[redacted] [redacted] I[redacted] [redacted] C[redacted]
[redacted] [redacted] [redacted]
M[redacted] [redacted] C[redacted] [redacted] [redacted] M[redacted] [redacted]

Existing Condition

[redacted]

- A[redacted]
- E[redacted] CFL [redacted]
- [redacted]

[redacted]

Recommendation

[redacted] LED [redacted] LED [redacted]

[redacted] LED [redacted]

[redacted] CFL [redacted] LED [redacted]

[redacted] LED [redacted]

F[redacted] E[redacted] LED [redacted]

Interactive Effects

[illegible] [illegible] [illegible] [illegible] [illegible] [illegible] [illegible] [illegible] [illegible]

[illegible] ECM [illegible] [illegible] K[illegible] E[illegible] FD

Economic Summary

ECM[illegible] [illegible]
E[illegible] [illegible] [illegible]
A[illegible] M[illegible] D[illegible] [illegible] [illegible]
[illegible] G[illegible] [illegible] [illegible]
E[illegible] [illegible] C[illegible] [illegible]
E[illegible] [illegible] I[illegible] [illegible] C[illegible]
[illegible] [illegible] [illegible]
M[illegible] [illegible] C[illegible] [illegible] [illegible] M[illegible] [illegible]

Existing Condition

[illegible] [illegible] [illegible] [illegible] [illegible] [illegible] [illegible] [illegible] [

[redacted]

Interactive Effects

[redacted]

[redacted]

Economic Summary

[redacted]	
[redacted]	[redacted]
[redacted]	[redacted]
[redacted]	[redacted]
[redacted]	[redacted]
[redacted]	[redacted]
[redacted]	[redacted]
[redacted]	[redacted]
[redacted]	[redacted]

Existing Condition

[redacted]

[redacted]

Recommendation

[redacted]

- [redacted]
- [redacted]
- [redacted]

Interactive Effects

[redacted]

[illegible] ECM [illegible] [illegible]

Economic Summary

ECM[illegible] [illegible]
E[illegible] [illegible] [illegible]
A[illegible] M[illegible] D[illegible] [illegible] [illegible]
[illegible] G[illegible] [illegible]
E[illegible] [illegible] C[illegible]
E[illegible] [illegible] I[illegible] [illegible] C[illegible]
[illegible] [illegible] [illegible]
E[illegible] [illegible] I[illegible]
[illegible] I[illegible] [illegible] C[illegible]
[illegible] [illegible] [illegible] I[illegible]
M[illegible] C[illegible] [illegible] [illegible] [illegible] M C[illegible]

Existing Condition

[illegible] C[illegible] [illegible] [illegible] [

F[illegible] [illegible] [illegible] L[illegible]

A [illegible] [illegible] [illegible]

Existing Condition

Recommendation

Interactive Effects

[redacted]

[redacted]

[redacted]

Economic Summary

[redacted]	
[redacted]	[redacted]
[redacted]	[redacted]
[redacted]	[redacted]
[redacted]	[redacted]
[redacted]	[redacted]
[redacted]	[redacted]
[redacted]	[redacted]

Existing Condition

[redacted]

Recommendation

[redacted]

[redacted]

[redacted]

F[illegible] E[illegible] M[illegible] C[illegible] M[illegible]

Interactive Effects

ECM [illegible] ECM [illegible] ECM [illegible] A[illegible] E[illegible]

[illegible] ECM [illegible] FD [illegible] CH [illegible]

Economic Summary

ECM[illegible]
E[illegible]
A[illegible] M[illegible] D[illegible]
E[illegible] C[illegible]
E[illegible] I[illegible] C[illegible]
[illegible]
M[illegible] C[illegible] M[illegible]

Existing Condition

[illegible] B[illegible] G[illegible] H[illegible] D[illegible]

Recommendation

[illegible]

[illegible]

[illegible]

Interactive Effects

[illegible]

[illegible] ECM [illegible] B[illegible]

Economic Summary

ECM[illegible]
E[illegible]
A[illegible]
[illegible]
E[illegible]
E[illegible]
[illegible]
M[illegible]

Existing Condition

[illegible]

F[illegible] E[illegible] B[illegible]

Recommendation

[illegible]

[illegible]

Interactive Effects

[illegible]

M F

D E C GHG

- A
- H FD
- E
- B

E

E C E C ECM ECM

ROCK GAP
Energy Services

A[illegible]E DI[illegible]

CALC[illegible]LA[illegible]I[illegible] A[illegible]D C[illegible] E[illegible]IMA[illegible]E

ROCK GAP
Energy Services

ECM-1: Interior Lighting Upgrade
Casino of the Sun
Energy Audit
February-2019
NORESCO

ECM-1: Savings Summary	
E[illegible]	[illegible]
A[illegible]	[illegible]
[illegible]	[illegible]
E[illegible]	[illegible]
E[illegible]	[illegible]
[illegible]	[illegible]
M[illegible]	[illegible]

	Existing												Proposed						Savings	
Floor	Room Number	Space Type	Lamp Type	# of Fixtures	Lighting Control	Number of Burned Out Fixtures	Lamps / Fixture	Watts / Lamp	Ballast Factor	Run Hours	Demand (kW)	Energy Usage (kWh)	Fixture Type	# of Fixtures	Lamps / Fixture	Watts / Lamp	Total new lamps	Demand (kW)	Energy Usage (kWh)	Demand (kW)	Energy Savings (kWh)
1	Employee Break Room	Break Room	2' T5	8	No Sensor	0	4	14	1	8,760	0.4	3,453	2' T5 LED	8	4	8	32	0.3	2,242	0.1	1,211
1	Employee Break Room	Break Room	32 W 4 tube CFL	1	No Sensor	0	1	32	1	8,760	0.0	247	4 tube CFL Repl	1	1	9	1	0.0	79	0.0	168
1	Employee Break Room	Break Room	HID Spot Lamp	9	No Sensor	0	1	50	N/A	8,760	0.5	3,942	Screw in LED Spo	9	1	8	9	0.1	631	0.4	3,311
1	Employee Break Room	Break Room	4' T8	32	No Sensor	0	1	32	1	8,760	0.9	7,893	4' LED	32	1	15	32	0.5	4,205	0.4	3,689
1	Security Office	24hr Office	4' T5	7	No Sensor	0	3	28	1	8,760	0.5	4,533	4' T5 LED	7	3	13	21	0.3	2,391	0.2	2,141
1	Office Corridor	Hallway	4' T8	11	No Sensor	0	2	32	1	8,760	0.6	5,427	4' LED	11	2	15	22	0.3	2,891	0.3	2,536
1	Unocc. Locker Room	Storage	4' T8	10	No Sensor	0	2	32	1	261	0.6	147	4' LED	10	2	15	20	0.3	78	0.3	69
1	IT Room	Office	4' T8	4	No Sensor	0	2	32	1	4,380	0.2	987	4' LED	4	2	15	8	0.1	526	0.1	461
1	IT Room 2	Office	4' T8	1	No Sensor	0	2	32	1	4,380	0.1	247	4' LED	1	2	15	2	0.0	131	0.0	115
1	Slot Tech	Office	32 W 4 tube CFL	12	No Sensor	0	1	32	1	4,380	0.3	1,480	4 tube CFL Repl	12	1	9	12	0.1	473	0.2	1,007
1	A/V Room	Office	4' T8	2	No Sensor	0	2	32	1	4,380	0.1	493	4' LED	2	2	15	4	0.1	263	0.1	231
1	Office Near A/V	Office	4' T8	2	No Sensor	0	3	32	1	4,380	0.2	740	4' LED	2	3	15	6	0.1	394	0.1	346
1	Storage near EMS	Storage	4' T8	4	No Sensor	0	3	32	1	261	0.3	88	4' LED	4	3	15	12	0.2	47	0.2	41
1	EMS	Office	4' T8	2	No Sensor	0	3	32	1	4,380	0.2	740	4' LED	2	3	15	6	0.1	394	0.1	346
1	Slots Office	Office	4' T8	4	No Sensor	0	3	32	1	4,380	0.3	1,480	4' LED	4	3	15	12	0.2	788	0.2	692
1	Office near Slots	Office	4' T8	2	No Sensor	0	3	32	1	4,380	0.2	740	4' LED	2	3	15	6	0.1	394	0.1	346
1	Kitchen Storage	Kitchen	4' T8	11	No Sensor	0	2	32	1	3,285	0.6	2,035	4' LED	11	2	15	22	0.3	1,084	0.3	951
2	Upstairs Offices	Office	4' T8	27	No Sensor	0	2	32	1	4,380	1.5	6,660	4' LED	27	2	15	54	0.8	3,548	0.7	3,112
1	Kitchen	Kitchen	4' T8	18	No Sensor	0	3	32	1	3,285	1.5	4,995	4' LED	18	3	15	54	0.8	2,661	0.7	2,334
1	Gaming Floor	Gaming Floor	32 W 4 tube CFL	120	No Sensor	0	1	32	1	8,760	3.4	29,600	4 tube CFL Repl	120	1	9	120	1.1	9,460	2.3	20,140
1	Public Restrooms	Bathroom	100W Inc	12	No Sensor	0	1	100	N/A	8,760	1.2	10,511	ew in LED 100W	12	1	14	12	0.2	1,472	1.0	9,040
1	Public Restrooms	Bathroom	4' LED	14	No Sensor	0	1	15	N/A	8,760	0.2	1,839	N/R	14	1	15	14	0.2	1,839	0.0	0
1	N/A - Breakroom Storage	Storage	32 W 4 tube CFL	8	No Sensor	0	1	32	1	261	0.2	59	4 tube CFL Repl	8	1	9	8	0.1	19	0.2	40
1	N/A - Office near security	Office	4' T8	2	No Sensor	0	3	32	1	4,380	0.2	740	4' LED	2	3	15	6	0.1	394	0.1	346
1	N/A - Behind Kitchen Storage	Storage	4' T8	11	No Sensor	0	2	32	1	261	0.6	162	4' LED	11	2	15	22	0.3	86	0.3	75
1	[illegible]	Hallway	4' T8	1	No Sensor	0	2	32	1	8,760	0.1	493	4' LED	1	2	15	2	0.0	263	0.0	231
1	[illegible]	Hallway	4' T8	1	No Sensor	0	2	32	1	8,760	0.1	493	4' LED	1	2	15	2	0.0	263	0.0	231
2	N/A - Unocc. Offices/Storage	Storage	4' T8 Unused Area	270	No Sensor	0	2	32	1	261	17.3	4,505	N/R	270	2	32	540	17.3	4,505	0.0	0
TOTAL	-	-	-	606	-		-	-			32.2	94,729	-	606	-	-	1061.0	23.9	41,520	8.3	53,209

Typical Lighting Operating Hours								
		Hours / Day					Annual Hours	
Space Type	Average Hours Saved From Sensors/ [illegible]	Mon. - Fri.	Sat.	Sun.	Hours / Week	Weeks / Year	Without Sensors	With Sensors
Gaming Floor	N/A	24	24	24	168	52	**8,760**	**8,760**
Break Room	30%	24	24	24	168	52	**8,760**	**6,132**
Office	30%	12	12	12	84	52	**4,380**	**3,066**
Hallway	30%	24	24	24	168	52	**8,760**	**6,132**
Bathroom	N/A	24	24	24	168	52	**8,760**	**8,760**
Storage	30%	1	0	0	5	52	**261**	**182**
24hr Office	30%	24	24	24	168	52	**8,760**	**6,132**
Kitchen	30%	9	9	9	63	52	**3,285**	**2,299**

Existing			Proposed	
Existing Lamp	Watts/ Lamp	Ballast Factor	New Fixture	New Watts/ Lamp
"U" T8	32	0.88	"U" LED	15
2' T8	17	0.88	2' LED	8
4' T8	32	0.88	4' LED	15
4' T8 Unused Area	32	0.88	N/R	32
8' T12	75	1.20	8' LED	40
2' T5	14	0.88	2' T5 LED	8
4' T5	28	0.88	4' T5 LED	13
4' T5 HO	54	0.88	54WT5 LED	29
HID Spot Lamp	50	N/A	Screw in LED Spot	8
4' LED	15	N/A	N/R	15
23W SI CFL	23	0.88	Screw in LED	9
60W Inc	60	N/A	Screw in LED	9
75W Inc	75	N/A	Screw in LED	12
100W Inc	100	N/A	crew in LED 100W reg	14
18W 2-pin CFL	18	0.88	2 pin LED Repl	8
18W 4-pin CFL	18	0.88	4 pin LED Repl	10
150W MH	150	1.30	150MH LED Repl	52
175W MH	175	1.20	175MH LED Repl	52
250W MH	250	1.20	250MH LED Repl	58
32 W 4 tube CFL	32	0.88	4 tube CFL Repl	9

New Lamp	Quantity of new Lamp
4' LED	**292**
2' T5 LED	**32**
4 tube CFL Repl	**141**
Screw in LED 100'	**12**
Screw in LED Spo	**9**
N/R	**554**
4' T5 LED	**21**

Plant	Fuel	System Efficiency	% of Load	Conversion Factor
Heating	Natural Gas	[illegible]	100%	100
	#2 Fuel Oil	[illegible]	0%	139.4
	Electric	1.0	0%	3.412

HVAC Interaction Calculation*

HVAC Cooling Interaction Factor ($HVAC_C$)	HVAC Cooling Demand Factor ($HVAC_{CD}$)	Estimated Lighting Savings in Cooled Space	Cooling Demand Savings (kW)	Cooling Energy Savings (kWh)	HVAC Heating Interaction Factor ($HVAC_H$)	Estimated Lighting Savings in Heated Space	Gas Heating Savings (therms)	Oil Heating Savings (gal)	Electric Heating Savings (kWh)
0.11	0.20	80%	**1.3**	**4,682**	-0.010	100%	**-532**	**0**	**0**

Annual Months of Demand Savings	12
Demand Coincidence Factor	1.0

ROCK GAP
Energy Services

ECM-2: Retro -Commissioning
Casino of the Sun
Energy Audit
February-2019
NORESCO

[illegible]
[illegible]
[illegible]
[illegible]
[illegible]
[illegible]
[illegible]
[illegible]
[illegible]

Total Annual Electric Energy Consumption (kWh)	Total Annual Natural Gas Consumption (Therm)	Average monthly peak kW	RCx savings %
2,958,912	73865	495	7.5%

ROCK GAP
Energy Services

ECM-3: Exterior Lighting Upgrade
Casino of the Sun
Energy Audit
February-2019
NORESCO

ECM[illegible]
E[illegible]
A[illegible] M[illegible] D[illegible]
[illegible] G[illegible]
E[illegible] C[illegible]
E[illegible]
[illegible]
M[illegible] C[illegible]

Light Fixture Location	Fixture Quantity	Lighting Control	Area Illuminated	Annual Operating Hours	Existing Exterior Lighting					Proposed Exterior Lighting			Energy Savings (kWh)
					Quantity Fixtures Burned Out	Fixture Type	Watts Per Fixture	Watts Per Ballast (Burned Out Fixtures)	Energy Consumption (kWh)	Replacement Fixture	Watts Per Fixture	Energy Consumption (kWh)	
Parking Lot	31	Photo sensor	Parking	4,380	0	400W MH	458	0	62,187	150 Watt LED NextGen II Parking Lot Lights - 20,000 Lumen - 5000K - Slip Fit Mount - WITH photocell	150	20,367	41,820
Front Covered Area	42	Photo sensor	Parking	4,380	0	42W TRT CFL	42	0	15,330	LED G24q PL Lamp - 4-Pin	9	3,285	12,045
N Façade	4	Photo sensor	Walkway	4,380	0	400W HPS	458	0	8,612	LED Wall Pack Replacement Fixture	120	2,584	6,029
W Façade	9	Photo sensor	Walkway	4,380	0	400W HPS	458	0	17,164	LED Wall Pack Replacement Fixture	120	5,149	12,015
S Façade	7	Time clock	Façade	4,380	0	400W HPS	458	0	14,454	LED Wall Pack Replacement Fixture	120	4,336	10,118
									117,748				**82,026**

Annual Months of Demand Savings	0
Demand Coincidence Factor	0%

ROCK GAP
Energy Services

ECM [illegible] E[illegible] FD
Casino of the Sun
Energy Audit
February-2019
NORESCO

ECM [illegible]
E[illegible]
A[illegible] M[illegible] D[illegible]
[illegible] G[illegible]
E[illegible] C[illegible]
E[illegible] C[illegible]
[illegible]
M[illegible] C[illegible]

K[illegible] H[illegible] M[illegible]						
[illegible] L[illegible]	E[illegible] G [illegible] L[illegible]	[illegible] ED [illegible] L[illegible]	[illegible] M[illegible] [illegible] F[illegible] L[illegible]	E[illegible] [illegible]	[illegible] [illegible]	[illegible] [illegible]
10%	0%	0%	0.01	0	0	0
20%	0%	0%	0.04	0	0	0
30%	0%	0%	0.09	0	0	0
40%	0%	0%	0.16	0	0	0
50%	0%	20%	0.25	0	1,659	-1,659
60%	0%	25%	0.36	0	2,987	-2,987
70%	0%	25%	0.49	0	4,066	-4,066
80%	0%	15%	0.64	0	3,186	-3,186
90%	0%	10%	0.81	0	2,688	-2,688
100%	100%	5%	1.00	33,189	1,659	31,529

10	Fan Mtr HP
90%	Mtr Efficiency
4,004	Annual Hours

TOTAL kWh	**33,189**	**16,246**	**16,943**

M[illegible] A[illegible]
10,000 Makeup Air Unit CFM
0.28 Therms/CFM
10,000 Existing Average CFM
6,850 Proposed Average CFM
3,150 Saved CFM
876 Total Therms Saved

1	ratio of supply to exhaust
10,000	Total Estimated Airflow
0.69	Proposed Average VFD Speed
0.32	Speed Reduction
12.5	Supply Fan HP
2.8	kW Reduction
11,382	kWh Savings

Notes:

1. VFD power consumption based on assumed load profile and affinity laws to the power of 2
2. Kitchen exhaust fan total motor power is based on kitchen size and number of hoods
3. Assuming fan operates 9 hours per day , 7 days/week, 52 weeks/year.
4. The makeup air unit is based on exhaust hp adjusted for additional pressure drop across furnace/filter
5. Existing and Proposed Average CFM for the makeup air unit is based on the existing and proposed kitchen hood % load profile.

ROCK GAP
Energy Services

ECM [illegible]
Casino of the Sun
Energy Audit
February-2019
NORESCO

ECM [illegible]	
[illegible]	[illegible]
[illegible]	[illegible]
[illegible]	[illegible]
[illegible]	[illegible]
[illegible]	[illegible]
[illegible]	[illegible]
[illegible]	[illegible]
[illegible]	[illegible]

Baseline Domestic Hot & Cold Water Consumption Estimates

Plant	Fuel	Efficiency	% of Load	Conversion Factor
DHW	Natural Gas	78.0%	100%	100
	#2 Fuel Oil	85.0%	0%	139.4
	Electric	1.00	0%	3.413

Total # of Visitors	Total # of Staff	Days per Year
120	30	365

Average Cold Water Temp. In (°F)	Average DHW Temp. Out (°F)	Temp Rise (°F)
50	130	80

Existing

Plumbing Fixtures	Daily Uses per Occupant	Flow Rate (gpf, gpm)	Duration (flush, Minutes)	Average Measured Output Temp	% CW	% DWH	Annual CW Gallons (1)	Annual DHW Gallons (2)
Toilets	1.35	1.6	1	N/A	100%	0%	118,260	0
Urinals	2	1	1	N/A	100%	0%	109,500	0
faucets	1.35	1.5	0.5	110	25%	75%	13,859	41,576
Showers	0	0	0	110	25%	75%	0	0
							241,619	41,576

Annual CW Gallons (1)	Annual DHW Gallons (2)	Total Annual Gallons	Utility Bill Gallons	Error From Utility Bills
241,619	**41,576**	**283,194**	NA	#VALUE!
85%	**15%**			

Proposed

Plumbing Fixtures	Daily Uses per Occupant	Flow Rate (gpf, gpm)	Duration (flush, Minutes)	Average Measured Output Temp	% CW	% DWH	Annual CW Gallons (1)	Annual DHW Gallons (2)
Toilets	1.35	1	1	N/A	100%	0%	73,913	0
Urinals	2	0.125	1	N/A	100%	0%	13,688	0
faucet	1.35	0.5	0.5	110	25%	75%	4,620	13,859
Showers	0	0	0	110	25%	75%	0	0
							92,220	13,859

Annual DHW Savings (Gallons)	DHW Heat Output (kBtu) (1)	Energy Savings			Water Savings
		Therms	Gallons (Fuel Oil)	kWh	Gallons
27,717	18,471	**237**	**0**	**0**	**177,116**

Notes:
1) Plumbing Fixtures Annual CW Gallons = (# Visitors + # Staff) x Days/Year x Daily Uses per Occupant x Fixture Flow Rate x Duration x % CW
2) Plumbing Fixtures Annual HW Gallons = (# Visitors + # Staff) x Days/Year x Daily Uses per Occupant x Fixture Flow Rate x Duration x % HW
3) Kitchen Cooking Annual CW Gallons = (# Visitors + # Staff) x Days/Year x (Gallons of Cooking Water + Drinking Water /Person/Meal) x % CW
4) Kitchen Cooking Annual HW Gallons = (# Visitors + # Staff) x Days/Year x (Gallons of Cooking Water + Drinking Water /Person/Meal) x % HW
5) Dishwasher Annual CW Gallons = Days/Year x Flow Rate x Hours/Day x Load Factor x % CW
6) Dishwasher Annual HW Gallons = Days/Year x Flow Rate x Hours/Day x Load Factor x % HW
7) Clothes Washer Loads/Year = Loads/Day x Days/Year
8) Clothes Washer Lbs/Year = Lbs Capacity x Loads/Year x Load Factor
9) Clothes Washer Annual CW Gallons = Lbs/Year x Water Consumption Factor x % CW
10) Clothes Washer Annual HW Gallons = Lbs/Year x Water Consumption Factor x % HW

ROCK GAP
Energy Services

ECM-6: Solar PV
Casino of the Sun
Energy Audit
February-2019
NORESCO

ECM[illegible]	
E[illegible]	[illegible]
A[illegible] M[illegible] D[illegible] [illegible]	[illegible]
[illegible] G[illegible] [illegible]	[illegible]
E[illegible] C[illegible]	[illegible]
E[illegible] I[illegible] C[illegible]	[illegible]
[illegible]	[illegible]
E[illegible] I[illegible]	[illegible]
[illegible] C[illegible]	[illegible]
[illegible] I[illegible]	[illegible]
M[illegible] C[illegible] M[illegible] C[illegible]	[illegible]

Annual Production from Aurora Solar:
148,805 kWh

Baseline electric consumption:
2,958,912 kWh

% Offset
5.0%

System Size :
91 kW

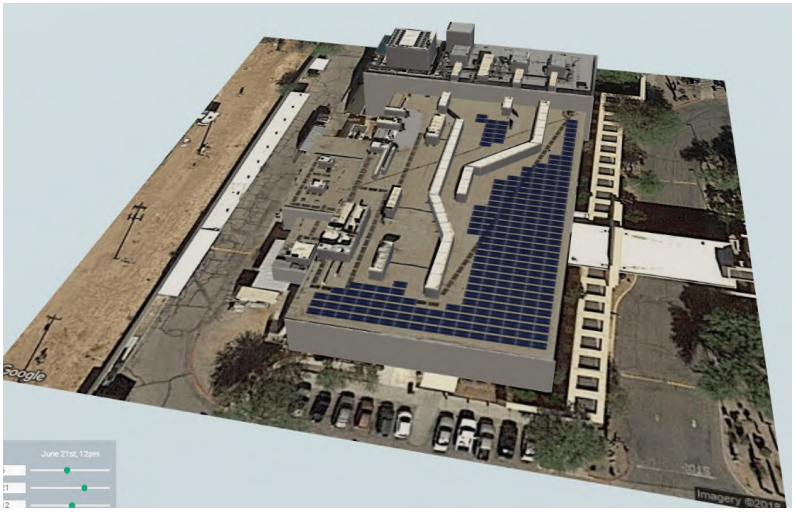

PROJECT FINANCIAL ECONOMICS

Annual Maintenance Cost	$2,275
Cost per kw installed (Gross)	$3,030
nstalled Cost	$275,730
Markup	120%
Sell Price	$330,876
Tax Credit	$124,263
Net Price	$206,613

Monthly kW savings											
4.41	8.69	4.49	20.16	20.71	9.91	10.8	14	7.62	5.34	6.13	2.83
Jan	Feb	Mar	Apr	May	Jun	Jul	Aug	Sep	Oct	Nov	Dec

ROCK GAP
Energy Services

ECM-7: Replace Chillers
Casino of the Sun
Energy Audit
February-2019
NORESCO

ECM
E
A M D
G
E C
E I C
M C M C

Description	Existing		Proposed		Savings	
	Chiller 1	Chiller 2	Chiller 1	Chiller 2	Chiller 1	Chiller 2
Rated Chiller Capacity (tons)	200	200	200	200	-	-
EER	9.60	9.60	13.80	13.80		
Efficiency (kW/ton)	1.25	1.25	0.87	0.87	0.38	0.38
Full Load Power Draw (kW)	250	250	173.913043	173.9130435	76.1	76.1
Equivalent Full Load Hours (hours)	2197	2197	2197	2197	-	-
Annual Electricity Consumption (kWh)	549,270	549,270	382,101	382,101	167169.1	167169.1
Interior lighting upgrade cooling savings (kWh)	4,682	4,682	3,257	3,257	-	-
Annual Electricity Consumption accounting for interior lighting upgrade interaction (kWh)	544,588	544,588	378,844	378,844	165,744	165,744

Annual Months of Demand Savings	9
Demand Coincidence Factor	0.8

Notes:
Cooling Equivalent Full Load Hours estimated based on weather bin data and energy end use breakdown

ROCK GAP
Energy Services

ECM-8: Occupancy Sensors
Casino of the Sun
Energy Audit
February-2019
NORESCO

Baseline Case			ECM Case		
Total lighting savings after lighting LED upgrade (kWh)	Lighting Demand Savings after LED upgrade (kW)	Lighting Gas Savings after LED upgrade (therm)	Total lighting savings with sensors (kWh)	Lighting Demand Savings with sensors (kW)	Lighting Gas Savings with sensors (therm)
[illegible]	[illegible]	[illegible]	[illegible]	[illegible]	[illegible]

ECM-8: Savings Summary	
E[illegible]	[illegible]
A[illegible] M[illegible] D[illegible]	[illegible]
[illegible]	[illegible]
E[illegible]	[illegible]
E[illegible]	[illegible]
[illegible]	[illegible]
M[illegible]	[illegible]

			Existing										Proposed								Savings		
Floor	Room Number	Space Type	Lamp Type	# of Fixtures	Lighting Control	Number of Burned Out Fixtures	Lamps / Fixture	Watts / Lamp	Ballast Factor	Run Hours	Demand (kW)	Energy Usage (kWh)	Fixture Type	Lighting Control	# of Fixtures	Lamps / Fixture	Watts / Lamp	Run Hours	Total new lamps	Demand (kW)	Energy Usage (kWh)	Demand (kW)	Energy Savings (kWh)
1	Employee Break Room	Break Room	2' T5	8	No Sensor	0	4	14	1	8,760	0.4	3,453	2' T5 LED	Sensor	8	4	8	7446	32	0.3	1,906	0.1	1,547
1	Employee Break Room	Break Room	32 W 4 tube CFL	1	No Sensor	0	1	32	1	8,760	0.0	247	4 tube CFL Repl	Sensor	1	1	9	7446	1	0.0	67	0.0	180
1	Employee Break Room	Break Room	HID Spot Lamp	9	No Sensor	0	1	50	N/A	8,760	0.5	3,942	Screw in LED Spot	Sensor	9	1	8	7446	9	0.1	536	0.4	3,406
1	Employee Break Room	Break Room	4' T8	32	No Sensor	0	1	32	1	8,760	0.9	7,893	4' LED	Sensor	32	1	15	7446	32	0.5	3,574	0.4	4,319
1	Security Office	24hr Office	4' T5	7	No Sensor	0	3	28	1	8,760	0.5	4,533	4' T5 LED	No Sensor	7	3	13	8760	21	0.3	2,391	0.2	2,141
1	Office Corridor	Hallway	4' T8	11	No Sensor	0	2	32	1	8,760	0.6	5,427	4' LED	No Sensor	11	2	15	8760	22	0.3	2,891	0.3	2,536
1	Unocc. Locker Room	Storage	4' T8	10	No Sensor	0	2	32	1	261	0.6	147	4' LED	Sensor	10	2	15	182	20	0.3	55	0.3	92
1	IT Room	Office	4' T8	4	No Sensor	0	2	32	1	4,380	0.2	987	4' LED	Sensor	4	2	15	3066	8	0.1	368	0.1	619
1	IT Room 2	Office	4' T8	1	No Sensor	0	2	32	1	4,380	0.1	247	4' LED	Sensor	1	2	15	3066	2	0.0	92	0.0	155
1	Slot Tech	Office	32 W 4 tube CFL	12	No Sensor	0	1	32	1	4,380	0.3	1,480	4 tube CFL Repl	Sensor	12	1	9	3066	12	0.1	331	0.2	1,149
1	A/V Room	Office	4' T8	2	No Sensor	0	2	32	1	4,380	0.1	493	4' LED	Sensor	2	2	15	3066	4	0.1	184	0.1	309
1	Office Near A/V	Office	4' T8	2	No Sensor	0	3	32	1	4,380	0.2	740	4' LED	Sensor	2	3	15	3066	6	0.1	276	0.1	464
1	Storage near EMS	Storage	4' T8	4	No Sensor	0	3	32	1	261	0.3	88	4' LED	Sensor	4	3	15	182	12	0.2	33	0.2	55
1	EMS	Office	4' T8	2	No Sensor	0	3	32	1	4,380	0.2	740	4' LED	Sensor	2	3	15	3066	6	0.1	276	0.1	464
1	Slots Office	Office	4' T8	4	No Sensor	0	3	32	1	4,380	0.3	1,480	4' LED	Sensor	4	3	15	3066	12	0.2	552	0.2	928
1	Office near Slots	Office	4' T8	2	No Sensor	0	3	32	1	4,380	0.2	740	4' LED	Sensor	2	3	15	3066	6	0.1	276	0.1	464
1	Kitchen Storage	Kitchen	4' T8	11	No Sensor	0	2	32	1	3,285	0.6	2,035	4' LED	Sensor	11	2	15	2299	22	0.3	759	0.3	1,276
2	Upstairs Offices	Office	4' T8	27	No Sensor	0	2	32	1	4,380	1.5	6,660	4' LED	Sensor	27	2	15	3066	54	0.8	2,483	0.7	4,177
1	Kitchen	Kitchen	4' T8	18	No Sensor	0	3	32	1	3,285	1.5	4,995	4' LED	No Sensor	18	3	15	3285	54	0.8	2,661	0.7	2,334
1	Gaming Floor	Gaming Floor	32 W 4 tube CFL	120	No Sensor	0	1	32	1	8,760	3.4	29,600	4 tube CFL Repl	No Sensor	120	1	9	8760	120	1.1	9,460	2.3	20,140
1	Public Restrooms	Bathroom	100W Inc	12	No Sensor	0	1	100	N/A	8,760	1.2	10,511	ew in LED 100W r	No Sensor	12	1	14	8760	12	0.2	1,472	1.0	9,040
1	Public Restrooms	Bathroom	4' LED	14	No Sensor	0	1	15	N/A	8,760	0.2	1,839	N/R	No Sensor	14	1	15	8760	14	0.2	1,839	0.0	0
1	N/A - Breakroom Storage	Storage	32 W 4 tube CFL	8	No Sensor	0	1	32	1	261	0.2	59	4 tube CFL Repl	Sensor	8	1	9	182	8	0.1	13	0.2	46
1	N/A - Office near security	Office	4' T8	2	No Sensor	0	3	32	1	4,380	0.2	740	4' LED	Sensor	2	3	15	3066	6	0.1	276	0.1	464
1	N/A - Behind Kitchen Storage	Storage	4' T8	11	No Sensor	0	2	32	1	261	0.6	162	4' LED	Sensor	11	2	15	182	22	0.3	60	0.3	101
1	NW Stairwell	Hallway	4' T8	1	No Sensor	0	2	32	1	8,760	0.1	493	4' LED	No Sensor	1	2	15	8760	2	0.0	263	0.0	231
1	West Stairwell	Hallway	4' T8	1	No Sensor	0	2	32	1	8,760	0.1	493	4' LED	No Sensor	1	2	15	8760	2	0.0	263	0.0	231
2	N/A - Unocc. Offices/Storage	Storage	4' T8 Unused Area	270	No Sensor	0	2	32	1	261	17.3	4,505	N/R	No Sensor	270	2	32	261	540	17.3	4,505	0.0	0
TOTAL	-	-	-	606	-		-	-			32.2	94,729	-		606	-	-		1061.0	23.9	37,861	8.3	56,868

Typical Lighting Operating Hours								
		Hours / Day					Annual Hours	
Space Type	Average Hours Saved From Sensors	Mon. - Fri.	Sat.	Sun.	Hours / Week	Weeks / Year	Without Sensors	With Sensors
Gaming Floor	N/A	24	24	24	168	52	**8,760**	**8,760**
Break Room	15%	24	24	24	168	52	**8,760**	**7,446**
Office	30%	12	12	12	84	52	**4,380**	**3,066**
Hallway	30%	24	24	24	168	52	**8,760**	**6,132**
Bathroom	N/A	24	24	24	168	52	**8,760**	**8,760**
Storage	30%	1	0	0	5	52	**261**	**182**
24hr Office	30%	24	24	24	168	52	**8,760**	**6,132**
Kitchen	30%	9	9	9	63	52	**3,285**	**2,299**

Existing			Proposed	
Existing Lamp	Watts/ Lamp	Ballast Factor	New Fixture	New Watts/ Lamp
"U" T8	32	0.88	"U" LED	15
2' T8	17	0.88	2' LED	8
4' T8	32	0.88	4' LED	15
4' T8 Unused Area	32	0.88	N/R	32
8' T12	75	1.20	8' LED	40
2' T5	14	0.88	2' T5 LED	8
4' T5	28	0.88	4' T5 LED	13
4' T5 HO	54	0.88	54WT5 LED	29
HID Spot Lamp	50	N/A	Screw in LED Spot	8
4' LED	15	N/A	N/R	15
23W SI CFL	23	0.88	Screw in LED	9
60W Inc	60	N/A	Screw in LED	9
75W Inc	75	N/A	Screw in LED	12
100W Inc	100	N/A	crew in LED 100W rep	14
18W 2-pin CFL	18	0.88	2 pin LED Repl	8
18W 4-pin CFL	18	0.88	4 pin LED Repl	10
150W MH	150	1.30	150MH LED Repl	52
175W MH	175	1.20	175MH LED Repl	52
250W MH	250	1.20	250MH LED Repl	58
32 W 4 tube CFL	32	0.88	4 tube CFL Repl	9

New Lamp	Quantity of new Lamp
4' LED	**292**
2' T5 LED	**32**
4 tube CFL Repl	**141**
Screw in LED 100'	**12**
Screw in LED Spo	**9**
N/R	**554**
4' T5 LED	**21**

	Estimated Number of Occ Sensors
Switch Mount	13
Ceiling Mount (C	6

Plant	Fuel	System Efficiency	% of Load	Conversion Factor
Heating	Natural Gas	[illegible]	100%	100
	#2 Fuel Oil	[illegible]	0%	139.4
	Electric	1.0	0%	3.412

HVAC Interaction Calculation*

HVAC Cooling Interaction Factor ($HVAC_C$)	HVAC Cooling Demand Factor ($HVAC_D$)	Estimated Lighting Savings in Cooled Space	Cooling Demand Savings (kW)	Cooling Energy Savings (kWh)	HVAC Heating Interaction Factor ($HVAC_C$)	Estimated Lighting Savings in Heated Space	Gas Heating Savings (therms)	Oil Heating Savings (gal)	Electric Heating Savings (kWh)
0.11	0.20	80%	**1.3**	**5,004**	-0.010	100%	**-569**	**0**	**0**

Annual Months of Demand Savings	12
Demand Coincidence Factor	1.0

ROCK GAP
Energy Services

ECM-9: Install VFD for CHW Pumps
Casino of the Sun
Energy Audit
February-2019
NORESCO

ECM [illegible]	
E[illegible]	[illegible]
A[illegible] M[illegible] D[illegible] [illegible]	[illegible]
E[illegible] [illegible] C[illegible]	[illegible]
E[illegible] [illegible] [illegible] C[illegible]	[illegible]
[illegible] [illegible]	[illegible]
M[illegible] C[illegible] [illegible]	[illegible]

Equipment	Serves	Indiv. Pump Motor Size (hp)	Estimated Load Factor	Existing Motor Efficiency (%)
Two CHW Pumps	CHW Loop	15	75%	89.5%

Proposed Motor Efficiency (%)	Assumed Losses from Installing VFD
91.7%	3%

Outdoor Air Bin Data Conditions & Calculation Setup					Existing			Proposed			Savings	
OAT db (°F)	OAT wb (°F)	Estimated Cooling Load	Estimated Heating Load	Applicable Annual Bin Hours	VFD Pump Speed (%)	Demand (kW)	Consumption (kWh)	VFD Pump Speed (%)	Demand (kW)	Consumption (kWh)	Consumption (kWh)	Demand (kW)
107.5		100%	0%	25	100%	9.4	234	100%	9.4	236	-1	0.0
102.5		100%	0%	205	100%	9.4	1,922	100%	9.4	1,932	-10	0.0
97.5		89%	0%	407	100%	9.4	3,816	89%	7.9	3,198	618	1.5
92.5		77%	0%	417	100%	9.4	3,910	77%	6.4	2,663	1,247	3.0
87.5		66%	0%	575	100%	9.4	5,392	66%	5.0	2,887	2,504	4.4
82.5		54%	0%	867	100%	9.4	8,130	54%	3.8	3,269	4,861	5.6
77.5		43%	0%	865	100%	9.4	8,111	43%	2.6	2,288	5,823	6.7
72.5		31%	0%	730	100%	9.4	6,845	31%	1.7	1,212	5,633	7.7
67.5		20%	0%	868	100%	9.4	8,139	28%	1.4	1,214	6,925	8.0
62.5		9%	17%	971	100%	9.4	9,105	28%	1.4	1,358	7,747	8.0
57.5		0%	25%	0	0%	0.0	0	0%	0.0	0	0	#DIV/0!
52.5		0%	34%	0	0%	0.0	0	0%	0.0	0	0	#DIV/0!
47.5		0%	43%	0	0%	0.0	0	0%	0.0	0	0	#DIV/0!
42.5		0%	52%	0	0%	0.0	0	0%	0.0	0	0	#DIV/0!
37.5		0%	61%	0	0%	0.0	0	0%	0.0	0	0	#DIV/0!
32.5		0%	69%	0	0%	0.0	0	0%	0.0	0	0	#DIV/0!
27.5		0%	78%	0	0%	0.0	0	0%	0.0	0	0	#DIV/0!
Totals	-	-	-	**5,930**	-	-	**55,606**	-	-	**20,259**	**35,347**	

Combined Chiller minimum flow	430	*gpm*
Combined Chiller maximum flow	1534	*gpm*
Minimum Cooling Flow (%)	28%	*percentage of existing flow*

Annual Months of Demand Savings	9
Demand Coincidence Factor	0.8

Assumptions:

- Cooling load is estimated to be at a maximum (100%) when outdoor air temperature is at or above ASHRAE 0.4% design condition of 89.5F, and 20% when minimal mechanical cooling is required (when OAT db is 55F), and is proportional to the difference in temperature between these points.

- Heating load is estimated to be at a maximum (100%) when outdoor air temperature is at or below ASHRAE 99.6% design condition of 13.1F, and is proportional to the difference between these indoor and outdoor temperatures. Indoor temperature is assumed to be 72F.

- Applicable Annual Bin hours are based on Annual Bin Hours within 6 AM through 4 PM.

- Demand savings for this ECM are not applicable considering that at full load there is no reduction in demand. There is a small demand savings from installing a higher efficiency motor, however this is effectively cancelled out by the additional losses from having a VFD controller for the purposes of this calculation.

- For conservativeness, the affinity factor used to calculate the proposed pump power is valued at 1.5.

- It is assumed that the chiller can operate under minimum chilled water flow of 40%.

- Current pump sequencing is 1 ON, 1 standby. This sequencing is assumed to be the same in the proposed condition once VFDs are installed.

Equations:

Pump Demand (kW) = [1 + VFD Losses (if applicable)] x [Pump Speed (%)]^1.5 x [Fan Motor Load (HP)] x [Load Factor] x [0.746 kW/HP] / [Motor Electrical Efficiency]

Pump Consumption (kWh) = [Pump Demand (kW)] x [Applicable Run Hours]

Consumption Savings (kWh) = [Existing Pump Consumption (kWh)] - [Proposed Pump Consumption (kWh)]

ROCK GAP
Energy Services

ECM-10: Replace Boiler
Casino of the Sun
Energy Audit
February-2019
NORESCO

ECM[illegible]
E[illegible]
A[illegible] M[illegible] D[illegible]
[illegible] G[illegible]
E[illegible] C[illegible]
E[illegible] I[illegible] C[illegible]
[illegible]
M[illegible] C[illegible] M C[illegible]

Existing Boiler				Proposed Boiler				
Fuel Type	Existing Fuel Consumption* (Therms)	Combustion Efficiency (%)**	Annual Boiler Output (kBtu)	Fuel Type	Combustion Efficiency (%)	Fuel Input (kBtu)	Proposed Fuel Oil Consumption (Gallons)	Proposed Natural Gas Consumption (Therms)
Natural Gas	33,933	76%	2,578,901	Natural Gas	92%	2,803,154	0	28,032

Notes:
****Fuel consumption was based on end use breakdown analysis***
*****Combustion efficiency accounts for some degradation due to boiler age***

Notes:
existing boiler is 5,700,000 Btuh

ROCK GAP
Energy Services

ECM-1: Interior Lighting Upgrade									
N/N	SOURCE LINE ITEM	DESCRIPTION OF WORK	UNIT	QTY	MATERIAL		LABOR		TOTAL
					PER UNIT	TOTAL	PER UNIT	TOTAL	
1	https://www.1000bulbs.com/product/174238/PLT-10351.html	Retrofit 4' T8 Fixtures with LED Lamps, Plug and Play	per lamp	292	$ 6	$ 1,749	$ 9	$ 2,771	$ 4,520
2	https://www.1000bulbs.com/product/208967/SATCO-S29850.html	Retrofit 42W and 32W 4 tube CFLs with 9watt plug and play LED lamp	per lamp	141	$ 11	$ 1,551	$ 9	$ 1,338	$ 2,889
3	https://www.1000bulbs.com/product/191727/GREENCREATIVE-57960.html	Retrofit 2' T5 Fixtures with LED Lamps, Plug and Play	per lamp	32	$ 14	$ 447	$ 9	$ 304	$ 751
4	https://www.amazon.com/SYLVANIA-Equivalent-Daylight-Energy-Efficient/dp/B01DPIC59M	Retrofit 100W incandescent lamps with 14watt LED Lamps, Plug and Play	per lamp	12	$ 10	$ 119	$ 9	$ 114	$ 233
5	https://www.1000bulbs.com/product/201008/GREENCREATIVE-58107.html	Retrofit 50W HID spot lamps with 8watt LED Lamps, Plug and Play	per lamp	9	$ 13	$ 113	$ 9	$ 85	$ 199
6	https://www.1000bulbs.com/product/175499/PLT-10433.html	Retrofit 4' T5 Fixtures with LED Lamps, Plug and Play	per lamp	21	$ 9	$ 188	$ 9	$ 199	$ 387
7	https://lampmaster.com/recycling-container-products/lampmaster/4ft-lampmaster-recycling-kit/	Fluorescent Lamp Recycling	per lamp	507	0.85	$ 431		$ -	$ 431
								Sub-Total	$ 9,409
								O&P 10%	$ 941
								CONTINGENCY 10%	$ 1,035
								ASBESTOS ABATEMENT	$ -
								ASBESTOS CONTINGENCY 0%	$ -
								PAYMENT & PERFORMANCE BOND 0%	$ -
								IC FEE 0%	$ -
								INTEREST DURING CONSTRUCTION 3%	$ 342
								DESIGN AND CM 20%	$ 2,345.31
								Other ( ) 0%	$ -
								Total	**$ 14,100**

ECM-2: Retro -Commissioning									
N/N	SOURCE LINE ITEM	DESCRIPTION OF WORK	UNIT	QTY	MATERIAL		LABOR		TOTAL
					PER UNIT	TOTAL	PER UNIT	TOTAL	
1	Estimated based on past projects	RCx for Casino building.	sf	70,000		$ -	$ 0.60	$ 42,000	$ 42,000
2	Estimated based on past projects	Allowance to implement RCx measures	sf	70,000		$ -	$ 0.30	$ 21,000	$ 21,000
								Sub-Total	$ 63,000
								O&P 10%	$ 6,300
								CONTINGENCY 10%	$ 6,930
								ASBESTOS ABATEMENT	$ -
								ASBESTOS CONTINGENCY 0%	$ -
								PAYMENT & PERFORMANCE BOND 0%	$ -
								IC FEE 0%	$ -
								INTEREST DURING CONSTRUCTION 0%	$ -
								DESIGN AND CM 0%	$ -
								Other ( ) 0%	$ -
								Total	**$ 76,300**

ECM-3: Exterior Lighting Upgrade									
N/N	SOURCE LINE ITEM	DESCRIPTION OF WORK	UNIT	QTY	MATERIAL		LABOR		TOTAL
					PER UNIT	TOTAL	PER UNIT	TOTAL	
1	https://www.ledlightexpert.com/150-Watt-LED-NextGen-II-Parking-Lot-Lights--20000-Lumen--5000K--Slip-Fit-Mount--WITH-photocell-_p_166.html	Replace parking lot pole fixtures with 150watt LED shoebox fixture	per fixture	31	$ 169	$ 5,239	$ 76	$ 2,353	$ 7,592
2	https://www.1000bulbs.com/product/208967/SATCO-S29850.html	Retrofit 4 tube CFL fixtures with 9 watt plug and play LED lamps	per lamp	83	$ 11	$ 892	$ 13	$ 1,049	$ 1,941

ROCK GAP
Energy Services

3	https://www.superbrightleds.com/moreinfo/led-wall-pack-lighting/120w-led-wall-pack-14400-lumens-400w-metal-halide-equivalent-5000k4000k/4774/11415/?utm_source=googlebase&utm_medium=base&utm_content=WP-xK120&utm_campaign=GoogleBaseChild&gclid=Cj0KCQiAsJfhBRCaARIsAO68ZM6le6AK2D0QZ2LWLuVlyWpEkLcdnyMGqgFal6UM_6lRy2phnRw4XDMaAg0fEALw_wcB	Replace 400W HPS wall pack fixtures with 120W LED fixtures	per fixture	20	$ 120	$ 2,399	$ 57	$ 1,139	$ 3,538
								Sub-Total	$ 13,071
								O&P 10%	$ 1,307
								CONTINGENCY 10%	$ 1,438
								ASBESTOS ABATEMENT	$ -
								ASBESTOS CONTINGENCY 0%	$ -
								PAYMENT & PERFORMANCE BOND 0%	$ -
								IC FEE 0%	$ -
								INTEREST DURING CONSTRUCTION 3%	$ 474
								DESIGN AND CM 20%	$ 3,258.09
								Other ( ) 0%	$ -
								Total	**$ 19,600**

ECM-4: Kitchen Exhaust VFD

N/N	SOURCE LINE ITEM	DESCRIPTION OF WORK	UNIT	QTY	MATERIAL		LABOR		TOTAL
					PER UNIT	TOTAL	PER UNIT	TOTAL	
1	Estimated based on past projects	Install kitchen exhaust VFD system including sensors, controlled, two new exhaust hoods with fans motors VFDs, and VFD for makeup air unit	total project	1	30,000.00	$ 30,000	$ -	$ -	$ 30,000
								Sub-Total	$ 30,000
								O&P 0%	$ -
								CONTINGENCY 0%	$ -
								ASBESTOS ABATEMENT	$ -
								ASBESTOS CONTINGENCY 0%	$ -
								PAYMENT & PERFORMANCE BOND 0%	$ -
								IC FEE 0%	$ -
								INTEREST DURING CONSTRUCTION 0%	$ -
								DESIGN AND CM 0%	$ -
								Other ( ) 0%	$ -
								Total	**$ 30,000**

ECM-5: Low Flow Fixtures

N/N	SOURCE LINE ITEM	DESCRIPTION OF WORK	UNIT	QTY	MATERIAL		LABOR		TOTAL
					PER UNIT	TOTAL	PER UNIT	TOTAL	
1	https://www.supply.com/shop?nid=1683972&d=1056-1276&wmh_cid=6437877492&wmh_aid=35077052860&wmh_kid=393808527774&gclid=Cj0KCQiA37HhBRC8ARIsAPWoO0zTqgWC6HK4nbHpp1XwaH7bvQatWz3v5RXUiW4YW13fkWS4UMUrWLsaAn2ZEALw_wcB	Replace toilets with 1.0 GPF toilet	per toilet	10	$ 164	$ 1,640	$ 44	$ 436	$ 2,076
2	https://www.supply.com/toto-porcelain-125-gpf-urinal-ut105u-01-cotton-white/p211519	Replace urinals with 0.125GPF	per urinal	7	$ 144	$ 1,011	$ 114	$ 797	$ 1,808
3	https://www.sustainablesupply.com/Sloan-Faucet-Sensor-3-8-In-Compresion-05-gpm-SF2350-C1913160	Replace bathroom faucets with 0.5GPM faucets, Automatic Sensor	per faucet	16	$ 377	$ 6,036	$ 19	$ 304	$ 6,340
								Sub-Total	$ 10,224
								O&P 10%	$ 1,022
								CONTINGENCY 10%	$ 1,125
								ASBESTOS ABATEMENT	$ -
								ASBESTOS CONTINGENCY 0%	$ -

ROCK GAP
Energy Services

PAYMENT & PERFORMANCE BOND	0%	$ -
IC FEE	0%	$ -
INTEREST DURING CONSTRUCTION	3%	$ 371
DESIGN AND CM	20%	$ 2,548.36
Other ( )	0%	$ -
Total		**$ 15,300**

ECM-6: Solar PV

N/N	SOURCE LINE ITEM	DESCRIPTION OF WORK	UNIT	QTY	MATERIAL PER UNIT	MATERIAL TOTAL	LABOR PER UNIT	LABOR TOTAL	TOTAL
1	https://news.energysage.com/much-solar-panels-cost-tucson-arizona/	Install 150kW roof mounted solar PV system including design, CM, labor	per kW	91	$ 3,030	$ 275,730	$ -	$ -	$ 275,730
								Sub-Total	$ 275,730
								O&P 0%	$ -
								CONTINGENCY 20%	$ 55,146
								ASBESTOS ABATEMENT	$ -
								ASBESTOS CONTINGENCY 0%	$ -
								PAYMENT & PERFORMANCE BOND 0%	$ -
								IC FEE 0%	$ -
								INTEREST DURING CONSTRUCTION 0%	$ -
								DESIGN AND CM 0%	$ -
								Other ( ) 0%	$ -
								Total	**$ 330,900**

ECM-7: Replace Chillers

N/N	SOURCE LINE ITEM	DESCRIPTION OF WORK	UNIT	QTY	MATERIAL PER UNIT	MATERIAL TOTAL	LABOR PER UNIT	LABOR TOTAL	TOTAL
1	[illegible]	[illegible]	EA	[illegible]	[illegible]	$ 361,500	[illegible]	$ 26,788	$ 388,288
2	[illegible]	D[illegible]	EA	[illegible]	[illegible]	$ -	[illegible]	$ 22,689	$ 22,689
3	[illegible]	D[illegible]	LB	[illegible]	[illegible]	$ -	[illegible]	$ 25,872	$ 25,872
4	E[illegible]	[illegible]	L[illegible]	[illegible]	[illegible]	$ 5,000	[illegible]	$ 2,500	$ 7,500
5	E[illegible]	A[illegible]	H[illegible]	[illegible]	[illegible]	$ -	[illegible]	$ 840	$ 840
6	E[illegible]	C[illegible]	H[illegible]	[illegible]	[illegible]	$ -	[illegible]	$ 1,680	$ 1,680
								Sub-Total	$ 446,869
								O&P 10%	$ 44,687
								CONTINGENCY 10%	$ 49,156
								ASBESTOS ABATEMENT	$ -
								ASBESTOS CONTINGENCY 0%	$ -
								PAYMENT & PERFORMANCE BOND 0%	$ -
								IC FEE 0%	$ -
								INTEREST DURING CONSTRUCTION 3%	$ 16,221
								DESIGN AND CM 20%	$ 111,386.62
								Other ( ) 0%	$ -
								Total	**$ 668,400**

ECM-8: Occupancy Sensors

N/N	SOURCE LINE ITEM	DESCRIPTION OF WORK	UNIT	QTY	MATERIAL PER UNIT	MATERIAL TOTAL	LABOR PER UNIT	LABOR TOTAL	TOTAL
1	https://www.1000bulbs.com/product/191663/ENER-MWOSW.html	Install Dual Technology Ultrasonic/PIR occupancy sensing wall switch for Offices and Restrooms	Per switch	13	65.82	$ 856	$ 28	$ 370	$ 1,226
2	https://www.1000bulbs.com/product/65481/LUT-LOSCIR1500W.html	Install Dual Technology Ultrasonic/PIR ceiling mounted occupancy sensor for Conference Rooms	Per Room	6	75.76	$ 455	$ 228	$ 1,366	$ 1,821
								Sub-Total	$ 3,047
								O&P 10%	$ 305
								CONTINGENCY 10%	$ 335
								ASBESTOS ABATEMENT	$ -
								ASBESTOS CONTINGENCY 0%	$ -
								PAYMENT & PERFORMANCE BOND 0%	$ -
								IC FEE 0%	$ -
								INTEREST DURING CONSTRUCTION 3%	$ 111
								DESIGN AND CM 20%	$ 759.40
								Other ( ) 0%	$ -
								Total	**$ 4,600**

ECM-9: Install VFD for CHW Pumps

N/N	SOURCE LINE ITEM	DESCRIPTION OF WORK	UNIT	QTY	MATERIAL PER UNIT	MATERIAL TOTAL	LABOR PER UNIT	LABOR TOTAL	TOTAL
1	[illegible]	M[illegible] H[illegible]	EA	[illegible]	[illegible]	$ 3,801		$ -	$ 3,801

ROCK GAP
Energy Services

2			EA			$ 10,223		$ -	$ 10,223
4			EA			$ -		$ 210	$ 210
5			EA			$ -		$ 503	$ 503
6			EA			$ -		$ 1,291	$ 1,291
7			HR			$ -		$ 856	$ 856
8			HR			$ -		$ 869	$ 869
9			EA			$ 1,426		$ 191	$ 1,617
10			EA			$ 2,853		$ 381	$ 3,234
11			EA			$ 3,704		$ 686	$ 4,390
12			EA			$ 5,055		$ 892	$ 5,947
13			LS			$ 1,500		$ 535	$ 2,035
14			LS			$ 1,000		$ 772	$ 1,772
15			DAY			$ -		$ 6,000	$ 6,000
16			HR			$ -		$ 1,680	$ 1,680
								Sub-Total	$ 44,428
								O&P 10%	$ 4,443
								CONTINGENCY 10%	$ 4,887
								ASBESTOS ABATEMENT	$ -
								ASBESTOS CONTINGENCY 0%	$ -
								PAYMENT & PERFORMANCE BOND 0%	$ -
								IC FEE 0%	$ -
								INTEREST DURING CONSTRUCTION 3%	$ 1,613
								DESIGN AND CM 20%	$ 11,074.16
								Other ( ) 0%	$ -
								Total	**$ 66,500**

ECM-10: Replace Boiler

N/N	SOURCE LINE ITEM	DESCRIPTION OF WORK	UNIT	QTY	MATERIAL PER UNIT	MATERIAL TOTAL	LABOR PER UNIT	LABOR TOTAL	TOTAL
1		Replace existing boiler with new condensing boile	MBH (blr capacity)	5,700	$ 66	$ 377,369		$ -	$ 377,369
								Sub-Total	$ 377,369
								O&P 10%	$ 37,737
								CONTINGENCY 10%	$ 41,511
								ASBESTOS ABATEMENT	$ -
								ASBESTOS CONTINGENCY 0%	$ -
								PAYMENT & PERFORMANCE BOND 0%	$ -
								IC FEE 0%	$ -
								INTEREST DURING CONSTRUCTION 3%	$ 13,698
								DESIGN AND CM 20%	$ 94,062.87
								Other ( ) 0%	$ -
								Total	**$ 564,400**

ECM [illegible]

E[illegible]

ECM[illegible]	
E[illegible]	[illegible]
A[illegible]	[illegible]
[illegible]	[illegible]
E[illegible]	[illegible]
E[illegible]	[illegible]
[illegible]	[illegible]
[illegible]	[illegible]

E[illegible]

[illegible]

F[illegible]

[illegible]

[illegible]

Linear fuorescent lamps can also be replaced by LED lamps wih internal drivers. This type of installaton is more costy as an electrician has to remove the existing ballast and lamp sockets, and rewire the f xture to supply power directly to new lamp sockets.

This ECM assumes replacing the following lamps with ballast driven "plug and play" LED lamps:

- Two hundred ninety two (292) 4' T8 lamps
- One hundred forty one (141) 4 tube CFL
- Twenty one (21) 4' T5 lamps
- Thirty two (32) 2' T5 lamps
- Twelve (12) 100W incandescent lamps
- Nine (9) 50W HID spot lamps

C E F K

.0 G

1.1 Detailed tables outlining the lightng replacement type, count, and location are provided in the following sectons.

1.2 The contractor will be responsible for veriying all fxture quantties and types, control requirements, locations, minimum light level & distribution pat ern requirements, and coordination wih Casino securiy requirements pror to ordering materials.

1.3 The contractor will be responsible for selecting appropriate replacement lamps and ensuring compatibility wih existng fxtures where applicable.

1.4 The contractor will be responsible for proper disposal and recycling of all materials.

1.5 Cont actor is responsible for completng all applicable incentive/rebate applicatons for Owner.

1.6 Primary goals of this project are:

1.6.1 Maximize lighting energy savings (i.e. watt reductons per fxture) while maintaining acceptable/appropriate lightng levels for each space type. Fixtures wih watages less than the proposed fxtures can be considered as long as appropriate lighting levels are achieved.

1.7 Prior to full implementaton, a pilot study should be completed on each of the space and fxture types. The pilot study's goal is to ensure that proper light levels, wiring, and controls can be achieved using the selected/approved materials. The cont actor should coordinate wih sie personnel to identiy where the pilot installations should be done. Light level measurements should be taken in each space type to ensure lightng complies wih minimum lighting requirements. The cont actor will be responsible for providing site personnel wih light level measurements fom the pilot study installations. Further installations will not commence until faciliy personnel approves the pilot study confgurations.

1.8 The following table summarizes the estimated quanty of materials for the Casino building:

F	
Ret ofit 4' T8 Fixtures wih LED Lamps, Plug and Play	292
Ret ofit 42W and 32W 4 tube CFL wih 9watt plug and play LED lamp	141
Ret ofit 2' T5 Fixtures wih LED Lamps, Plug and Play	32
Ret ofit 100W incandescent lamps wih 14watt LED Lamps, Plug and Play	12
Ret ofit 50W HID spot lamps wih 8watt LED Lamps, Plug and Play	9
Ret ofit 4' T5 Fixtures wih LED Lamps, Plug and Play	21

[illegible] A[illegible] [illegible] [illegible] [illegible] [illegible] [illegible] [illegible] [illegible] [illegible] C[illegible] C[illegible]M[illegible] [illegible] [illegible] [illegible] [illegible] [illegible] [illegible] [illegible] [

[illegible] [illegible] C[illegible] [illegible] [illegible] E[illegible] A[illegible]

	E[illegible]								
[illegible]	F[illegible] [illegible]	E[illegible] [illegible] F[illegible] [illegible]	E[illegible] [illegible] L[illegible] [illegible] F[illegible]	E[illegible] [illegible] [illegible] L[illegible]	[illegible] [illegible] L[illegible] [illegible]	E[illegible] [illegible] F[illegible] [illegible]	E[illegible] [illegible] L[illegible] [illegible] F[illegible]	E[illegible] [illegible] [illegible] L[illegible]	E[illegible] [illegible] L[illegible] [illegible]
Public Restrooms	100W Inc	12	1	100	Screw in LED 100W repl	12	1	14	12
Employee Break Room	2' T5	8	4	14	2' T5 LED	8	4	8	32
Employee Break Room	32 W 4 tube CFL	1	1	32	4 tube CFL Repl	1	1	9	1
Slot Tech	32 W 4 tube CFL	12	1	32	4 tube CFL Repl	12	1	9	12
Gaming Floor	32 W 4 tube CFL	120	1	32	4 tube CFL Repl	120	1	9	120
Breakroom Storage	32 W 4 tube CFL	8	1	32	4 tube CFL Repl	8	1	9	8
Public Restrooms	4' LED	14	1	15	N/R	14	1	15	14
Security Office	4' T5	7	3	28	4' T5 LED	7	3	13	21
Employee Break Room	4' T8	32	1	32	4' LED	32	1	15	32
Office Corridor	4' T8	11	2	32	4' LED	11	2	15	22
Unocc. Locker Room	4' T8	10	2	32	4' LED	10	2	15	20
IT Room	4' T8	4	2	32	4' LED	4	2	15	8
IT Room 2	4' T8	1	2	32	4' LED	1	2	15	2
A/V Room	4' T8	2	2	32	4' LED	2	2	15	4
Office Near A/V	4' T8	2	3	32	4' LED	2	3	15	6
Storage near EMS	4' T8	4	3	32	4' LED	4	3	15	12
EMS	4' T8	2	3	32	4' LED	2	3	15	6
Slots Office	4' T8	4	3	32	4' LED	4	3	15	12
Office near Slots	4' T8	2	3	32	4' LED	2	3	15	6
Kitchen Storage	4' T8	11	2	32	4' LED	11	2	15	22
Upstairs Offices	4' T8	27	2	32	4' LED	27	2	15	54
Kitchen	4' T8	18	3	32	4' LED	18	3	15	54
Office near security	4' T8	2	3	32	4' LED	2	3	15	6
Behind Kitchen Storage	4' T8	11	2	32	4' LED	11	2	15	22
NW Stairwell	4' T8	1	2	32	4' LED	1	2	15	2
West Stairwell	4' T8	1	2	32	4' LED	1	2	15	2
Upstairs - Unocc. Offices/Storage	4' T8 Unused Area	270	2	32	N/R	270	2	32	540
Employee Break Room	HID Spot Lamp	9	1	50	Screw in LED Spot	9	1	8	9
Totals	-	**606**	-	-	-	**606**	-	-	**1061.0**

[illegible] E[illegible] [illegible] [illegible] [illegible] [illegible] [illegible]

[illegible] M[illegible] [illegible]

[illegible] C[illegible] [illegible] [illegible] [illegible] [illegible] [

[illegible]AM[illegible]LE [illegible] D[illegible] C[illegible] [illegible]ECIFICA[illegible]I[illegible] [illegible]

T5 8W HE 2FT. DIR TITANIUM LED SERIES

GREENCREATIVE

PRO

DIRect

8W REPLACES

14W Fluo.

60% Energy Savings

- Compatible with Instant Start & Programmed Start ballasts
- Easy to install - Plug & Play Direct
- Exceptional efficacy 138 LPW
- Suitable for use in totally enclosed fixtures
- Powerful light output 1100 lumens
- Dimmable

HIGH LUMEN EFFICIENCY - SUPERIOR PERFORMANCE

T5 8W HE 2FT. DIR TITANIUM LED SERIES

GREENCREATIVE

SPECIFICATIONS**

Product Model	57958 8T5HE/2F/830/DIR	57959 8T5HE/2F/835/DIR	57960 8T5HE/2F/840/DIR
Type	T5	T5	T5
Base	Mini Bi-Pin G5	Mini Bi-Pin G5	Mini Bi-Pin G5
Power (W)	8	8	8
Voltage - Frequency	120-277V 50-60Hz	120-277V 50-60Hz	120-277V 50-60Hz
Color Temp. (ANSI)	Warm White 3000K	Neutral White 3500K	Cool White 4000K
CRI (Ra)	80	80	80
Typical lumens (lm)	950	950	1100
Efficacy (LPW)	119	119	138
Light Emitting Area	270°	270°	270°
Beam Angle	120°	120°	120°
Dimmable	Yes	Yes	Yes
Power Factor	0.9	0.9	0.9
THD	<20%	<20%	<20%
Rated Lifetime - L70 (hrs.)	50,000	50,000	50,000
Dia. x MOL	0.67"x22.17" (17x563mm)	0.67"x22.17" (17x563mm)	0.67"x22.17" (17x563mm)
Weight (lb. / g)	0.17lb. / 78g	0.17lb. / 78g	0.17lb. / 78g

PROGRAM START BALLAST PERFORMANCE

Bare Lamp (W)	System (W)	3000K Lumens	3500K Lumens	4000K Lumens
8	10	950	950	1100

Testing Method: Above system power is half the total system power of a 2-tube installation using an electronic ballast. Power and lumen output will vary based on ballast and fixture type. Above data is indicative only.

* Suitable for use in totally enclosed fixtures
** Specification data is preliminary and may be subject to change
*** Suitable for damp locations. Not for use where directly exposed to the weather or water

PAR20 8W DIM. TITANIUM CRI^{SP} LED SERIES

GREENCREATIVE

ENERGY STAR

HIGH CRI
LED TECHNOLOGY

REFINE SERIES

CRI^{SP}

8W REPLACES

50W Hal.

80% Energy Savings

$163 Savings per lamp*

- Full-face REFINE optic and sleek design
- Exceptional color rendering CRI 90
- Richer reds and natural skin tones (R9 65, R13 90)
- Tight LED binning for consistent CCT across all lamps
- High efficacy 69 LPW in Warm White
- Suitable for use in totally enclosed fixtures

50,000 H

DIMMABLE

69 LPW EFFICACY

5 YR WARRANTY

90 CRI (Ra)

ENCLOSED**

c UL us LISTED

FC

LM 79

LM 80

TM 21

IES

PATENTED REFINE OPTIC

The innovative REFINE optic provides a high candela to lumen ratio, optimizing light usage for directional applications.

REFINE SERIES

REFLECTOR
Directs light

SHAPING LENS
Refines beam pattern

ILLUMINANCE & CANDELA DISTRIBUTION

8PAR20DIM/930SP15

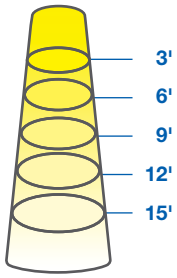

Diameter	Footcandles
0.8	600
1.6	150
2.4	67
3.2	38
3.9	24

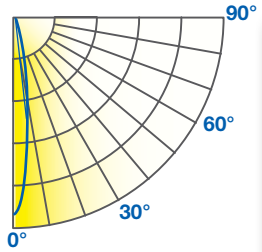

Degree	Candela
0	5400
5	3294
15	421
25	129
35	71
45	41

8PAR20DIM/930NF25

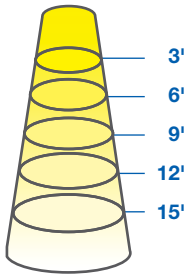

Diameter	Footcandles
1.3	311
2.7	78
4.0	35
5.3	19
6.7	12

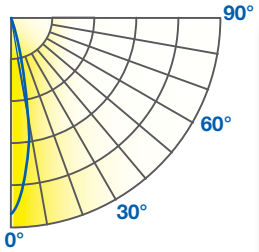

Degree	Candela
0	2800
5	2421
15	740
25	147
35	48
45	26

8PAR20DIM/930FL40

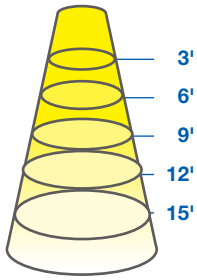

Diameter	Footcandles
2.2	133
4.4	33
6.6	15
8.7	8
10.9	5

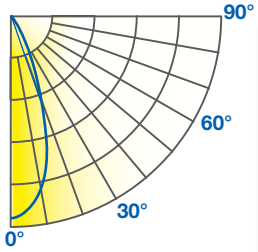

Degree	Candela
0	1200
5	1177
15	765
25	232
35	93
45	54

For other CCT use the following multipliers: 2700K 0.97, 4000K 1.04

Base: E26
Voltage: 120V
Dimmable: Yes***
PF: 0.9
Lifetime (L70): 50,000 hrs
Weight: 0.19lb / 88g

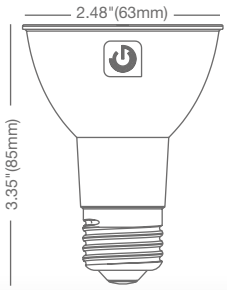

SPECIFICATIONS

Model	Product	Power (W)	CCT	CRI (typ.)	R9 / R13 (typ.)	Lumens	LPW	Beam Angle	CBCP (cd)
8PAR20DIM/927SP15	58104	8	Soft White 2700K	90	65/90	535	67	SP 15°	5300
8PAR20DIM/927NF25	58105	8	Soft White 2700K	90	65/90	535	67	NF 25°	2700
8PAR20DIM/927FL40	58106	8	Soft White 2700K	90	65/90	535	67	FL 40°	1170
8PAR20DIM/930SP15	58107	8	Warm White 3000K	90	65/90	550	69	SP 15°	5400
8PAR20DIM/930NF25	58108	8	Warm White 3000K	90	65/90	550	69	NF 25°	2800
8PAR20DIM/930FL40	58109	8	Warm White 3000K	90	65/90	550	69	FL 40°	1200
8PAR20DIM/940FL40	58112	8	Cool White 4000K	90	65/90	570	71	FL 40°	1250
8PAR20DIM/930FL40/B •	97901	8	Warm White 3000K	90	65/90	550	69	FL 40°	1200

• Black finish

* Savings per lamp based on $0.11 / kw energy cost, 12 hrs / day lamp usage, $5.50 halogen with 1500-hr lifetime, $15 LED with 50,000-hr lifetime
** Suitable for use in totally enclosed fixtures
*** List of tested dimmer switches available on website
**** Suitable for damp locations. Not for use where directly exposed to weather or water

Ref.#: DS205-PAR20-8W-130417

LED T5 | DIRECT REPLACEMENT

Product Features

- Easy Plug-and-Play Installation - No Rewiring Required
- Operates with Electronic Ballasts[1]
- Identical Look to Standard Fluorescent Lamp
- Full Glass Lens with 240 Degree Light Distribution
- High Efficacy with 50% Energy Savings
- DLC QPL Listed
- UL Listed for Direct Fuorescent Lamp Replacement
- 5-Year Warranty
- ETL Sanitation Listed for Food Service Applications

$90 Total Life Savings[3]

Applications

- Office Buildings/Schools
- Warehouse
- Manufacturing Facilities
- Parking Garages

Model Number[2]	Lamp Type	Base	Watts / Replaced	Lumens	CCT	MOL	Distribution	Certification	Warranty
LBT5F16xx	Plug-n-Play	G5	13W / 28W	1650 lm	3500K 4100K 5000K	45.8”	240°	UL	5-Years
LBT5F33xx	Plug-n-Play	G5	31W / 54W	3300 lm	3500K 4100K 5000K	45.8”	240°	UL/DLC	5-Years

NOTE 1: Please reference our Ballast Compatibility List
NOTE 2: Replace xx with 35 for 3500K, 41 for 4100K, and 50 for 5000K Color Temperature
NOTE 3: Savings calculated by 50,000 hour Lifetime, Electricity rated $0.12, and 3 Operating Hours Per Day.

LED T8 | DIRECT REPLACEMENT

Product Features

- Easy Plug-and-Play Installation - No Rewiring Required
- Operates with Electronic Ballasts[1]
- Identical Look to Standard Fluorescent Lamp
- Full Glass Lens with 240 Degree Light Distribution
- High Efficacy with 50% Energy Savings
- UL Listed for Direct Fluorescent Lamp Replacement
-
- ETL Sanitation Listed for Food Service Applications
- 5-Year Warranty

$125 Total Life Savings[3]

Applications

- Office Buildings/Schools
- Warehouse
- Manufacturing Facilities
- Parking Garages

Model Number[2]	Lamp Type	Base	Watts / Replaced	Lumens	CCT	MOL	Distribution	Certification	Warranty
LBT8F12xxB	Plug-n-Play	G13	9W / 17W	1200 lm	3500K 4100K 5000K	24”	240°	UL/DLC	5-Years
LBT8F16xxB-3FT	Plug-n-Play	G13	13W / 32W	1650 lm	3500K 4100K 5000K	36”	240°	UL	5-Years
LBT8F16xxB	Plug-n-Play	G13	13W / 32W	1650 lm	3500K 4100K 5000K	48”	240°	UL/DLC	5-Years
LBT8F18xxB	Plug-n-Play	G13	15W / 32W	1800 lm	3500K 4100K 5000K	48”	240°	UL/DLC	5-Years
LBT8F22xxB	Plug-n-Play	G13	19W / 32W	2200 lm	3500K 4100K 5000K	48”	240°	UL/DLC	5-Years

NOTE 1: Please reference our Ballast Compatibility List.
NOTE 2: Replace xx with 35 for 3500K, 41 for 4100K, and 50 for 5000K Color Temperature
NOTE 3: Savings calculated by 50,000 hour Lifetime, Electricity rated $0.12, and 3 Operating Hours Per Day.

Contractor Series LED A19 Lamps

11,000 Hours Life

450lm and 800lm

1100lm and 1500lm

800lm, GU24

Key Features & Benefits

- Rated life: up to 11,000 hours (L_{70})
- UV and IR free
- Mercury and lead free
- RoHS compliant
- Available in 2700K, 3000K, 3500K and 5000K color temperatures (4100K for A60)
- 6W and 8.5W approved for use in totally enclosed fixtures.
- Suitable for rough service
- Suitable for damp environments
- Reduces energy consumption up to 86%
- Lasts up to 11 times longer than incandescent lamps
- No warm-up time, instant-on with full light output and stable color

Rated up to 11,000 hours at 70% lumen maintenance, Contractor Series LED A19 lamps offer years of service and reduce energy and maintenance costs. Contractor Series LED A19 lamps are environmentally preferred products. They are RoHS compliant and contain no mercury, lead or other hazardous materials. They emit no UV or IR radiation. A CRI of 80+ ensures good color definition. Available in warm white 2700K CCT, white 3000K CCT, bright white 3500K CCT and daylight 5000K CCT, these lamps offer a great value where a non-dimmable, semi-directional lamp is appropriate in both homes and businesses.

Product Offering

Ordering Abbreviation	Color Temperature	Typical Lumens
6 Watt A-line	2700K, 3000K, 3500K & 5000K	450
8.5 Watt A-line	2700K, 3000K, 3500K, 4100K & 5000K	800
12 Watt A-line	2700K, 3000K, 3500K & 5000K	1100
14 Watt A-line	2700K, 3000K, 3500K & 5000K	1500

Application Information

Applications

- Downlights
- Pendant fixtures
- Table lamps
- Wall sconces

Market Segments

- Healthcare
- Hospitality
- Residential
- Retail

Application Notes

1. Operating temperature range between -20°C and +45°C (-4°F and +113°F)
2. Not for use with emergency light fixtures or exit lights
3. Suitable for damp environments
4. Not intended for use with dimmers
5. 6W and 8.5W approved for use in totally enclosed fixtures.

This device complies with part 15 of the FCC Rules. Operation is subject to the following two conditions: (1) This device may not cause harmful interference, and (2) this device must accept any interference received, including interference that may cause undesired operation. For FCC Part 15 user information, please see www.sylvania.com/fcc15b.

Specification Data

Catalog #	Type
Project	
Comments	
Prepared by	

Ordering Information

Item Number	Ordering Abbreviation	Wattage (W)	Base Type	Replaces	Input Voltage (V)	Average Rated Life (hrs.)	CCT	Typical Lumens (lm)	CRI	Power Factor	Bulb Finish	ENERGY STAR®
74076	LED6A19/F/827/10YV/RP	6	Medium	40W A19	120	11,000	2700K	450	80	0.5	Frosted	N/A
74077	LED6A19/F/827/10YV/RP2	6	Medium	40W A19	120	11,000	2700K	450	80	0.5	Frosted	N/A
74079	LED6A19/F/827/10YV/RP4	6	Medium	40W A19	120	11,000	2700K	450	80	0.5	Frosted	N/A
74731	LED6A19/F/830/10YV/RP	6	Medium	40W A19	120	11,000	3000K	450	80	0.5	Frosted	N/A
79701	LED6A19/F/835/10YV/RP	6	Medium	40W A19	120	11,000	3500K	450	80	0.5	Frosted	N/A
79703	LED6A19/F/835/10YV/RP4	6	Medium	40W A19	120	11,000	3500K	450	80	0.5	Frosted	N/A
74080	LED6A19/F/850/10YV/RP	6	Medium	40W A19	120	11,000	5000K	450	80	0.5	Frosted	N/A
74081	LED6A19/F/850/10YV/RP2	6	Medium	40W A19	120	11,000	5000K	450	80	0.5	Frosted	N/A
74084	LED6A19/F/850/10YV/RP4	6	Medium	40W A19	120	11,000	5000K	450	80	0.5	Frosted	N/A
73885	LED8.5A19/F/827/10YV/RP	8.5	Medium	60W A19	120	11,000	2700K	800	80	0.5	Frosted	N/A
73886	LED8.5A19/F/827/10YV/RP2	8.5	Medium	60W A19	120	11,000	2700K	800	80	0.5	Frosted	N/A
73888	LED8.5A19/F/827/10YV/RP4	8.5	Medium	60W A19	120	11,000	2700K	800	80	0.5	Frosted	N/A
74733	LED8.5A19/F/830/10YV/RP	8.5	Medium	60W A19	120	11,000	3000K	800	80	0.5	Frosted	N/A
74321	LED8.5A19/F/841/10YV/RP	8.5	Medium	60W A19	120	11,000	4100K	800	80	0.5	Frosted	N/A
78107	LED8.5A19/F/850/GU24/10YV/RP	8.5	GU24	60W A19	120	11,000	5000K	800	80	0.5	Frosted	N/A
78106	LED8.5A19/F/827/GU24/10YV/RP	8.5	GU24	60W A19	120	11,000	2700K	800	80	0.5	Frosted	N/A
79702	LED8.5A19/F/835/10YV/RP	8.5	Medium	60W A19	120	11,000	3500K	800	80	0.5	Frosted	N/A
79704	LED8.5A19/F/835/10YV/RP4	8.5	Medium	60W A19	120	11,000	3500K	800	80	0.5	Frosted	N/A
79281	LED8.5A19/F/850/10YV/RP	8.5	Medium	60W A19	120	11,000	5000K	800	80	0.5	Frosted	N/A
79282	LED8.5A19/F/850/10YV/RP2	8.5	Medium	60W A19	120	11,000	5000K	800	80	0.5	Frosted	N/A
79284	LED8.5A19/F/850/10YV/RP4	8.5	Medium	60W A19	120	11,000	5000K	800	80	0.5	Frosted	N/A
79291	LED12A19/F/827/10YV/RP	12	Medium	75W A19	120	11,000	2700K	1100	80	0.5	Frosted	N/A
78097	LED12A19/F/827/10YV/RP4	12	Medium	75W A19	120	11,000	2700K	1100	80	0.5	Frosted	N/A
74736	LED12A19/F/830/10YV/RP	12	Medium	75W A19	120	11,000	3000K	1100	80	0.5	Frosted	N/A
78096	LED12A19/F/835/10YV/RP	12	Medium	75W A19	120	11,000	3500K	1100	80	0.5	Frosted	N/A
78099	LED12A19/F/835/10YV/RP4	12	Medium	75W A19	120	11,000	3500K	1100	80	0.5	Frosted	N/A
79293	LED12A19/F/850/10YV/RP	12	Medium	75W A19	120	11,000	5000K	1100	80	0.5	Frosted	N/A
78100	LED12A19/F/850/10YV/RP4	12	Medium	75W A19	120	11,000	5000K	1100	80	0.5	Frosted	N/A
79292	LED14A19/F/827/10YV/RP	14	Medium	100W A19	120	11,000	2700K	1500	80	0.5	Frosted	N/A
78101	LED14A19/F/827/10YV/RP4	14	Medium	100W A19	120	11,000	2700K	1500	80	0.5	Frosted	N/A
74738	LED14A19/F/830/10YV/RP	14	Medium	100W A19	120	11,000	3000K	1500	80	0.5	Frosted	N/A
78098	LED14A19/F/835/10YV/RP	14	Medium	100W A19	120	11,000	3500K	1500	80	0.5	Frosted	N/A
78102	LED14A19/F/835/10YV/RP4	14	Medium	100W A19	120	11,000	3500K	1500	80	0.5	Frosted	N/A
79294	LED14A19/F/850/10YV/RP	14	Medium	100W A19	120	11,000	5000K	1500	80	0.5	Frosted	N/A
78103	LED14A19/F/850/10YV/RP4	14	Medium	100W A19	120	11,000	5000K	1500	80	0.5	Frosted	N/A

Ordering Guide

LED	6	A19	/	F	/	8	27	/	10YV	/	RP
LED Lamps	Wattage: 6	Lamp Type: A19		Frosted		CRI 8 = 80+	CCT 27 = 2700K 30 = 3000K 35 = 3500K 50 = 5000K		11,000 hours life		Retail Package RP = 1 lamp Retail Package RP2 = 2 lamp Retail Package RP4 = 4 lamp Retail Package

Lamp Dimensions

	(A) MOL inches (mm)	(B) Diameter inches (mm)
LED6A19	4.4 (112)	2.36 (60)
LED8.5A19	4.4 (112)	2.36 (60)
LED8.5A19 GU24	4.2 (108)	2.36 (60)
LED12A19	4.3 (109)	2.36 (60)
LED14A19	4.3 (109)	2.36 (60)

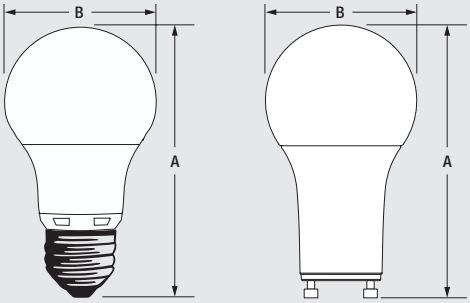

Energy Savings

Basic Product Description	LED Life (hrs.)	LED Lumens	Similar Incandescent	Incandescent Life (hrs.)	Incandescent Lumens	Watts Saved	Energy Savings*	LED Life vs. Incandescent
LED6A19	11,000	450	40W A19	1500	465	34	$41.14	7.3x
LED8.5A19	11,000	800	60W A19	1000	850	51.5	$62.31	11x
LED12A19	11,000	1100	75W A19	750	1170	63	$76.23	14.6x
LED14A19	11,000	1500	100W A19	750	1600	86	$104.06	14.6x

*Energy savings over life of lamp calculated at $0.11/kWh

LEDVANCE LLC
200 Ballardvale Street
Wilmington, MA 01887 USA
Phone 1-800-LIGHTBULB (1-800-544-4828)
www.sylvania.com

SYLVANIA and LEDVANCE are registered trademarks.
All other trademarks are those of their respective owners.
Licensee of product trademark SYLVANIA in general lighting.
Specifications subject to change without notice.

/sylvania /sylvania

© 2018 LEDVANCE LLC

S29850

9WPLH/LED/830/DR/4P
9W LED PL 4-Pin; 3000K; 950 Lumens; G24q base; 50000 Average rated hours; 120 Deg. beam spread

S29850

Features
- Replaces 26, 32, and 42 watt CFLs
- Direct Replacement - for use with Electronic, Instant Start, Rapid Start, and Programmed Start ballasts with no rewiring required. Ballast required.
- Instant on to full brightness / no flickering
- Horizontal operation
- Up to 70% energy saving
- Long life - 50,000 hours
- 5 year warranty

*Ballast required (See Ballast Compatibility Chart)

Item Number	UPC	Watts	Fluorescent Equivalent	Lamp Shape	Base	Lamp Code	Dimmable/Non-Dimmable
S29850	045923298509	9	26, 32, and 42 watt CFL	PL	G24q	9WPLH/LED/830/DR/4P	Non-Dimmable

Finish	MOL In Inches	MOD In Inches	Initial Lumens	Average Rated Hours	Kelvin Temp	Color	CRI
Frost	6-5/8"	1-3/32"	950	50000	3000	Soft White	82

Beam Spread Deg	Operating Temperature	Package Type	CEC Status	DLC ID:	RoHS Compliant	UL or ETL Listed	UL Classification
120	-20C (-4F) to a maximum of +45C (+113F)	Box	Lawful for sale in California	PLJAGBSSPJZJ DLC Search	Yes	Yes	cULus Classified - Damp Location Rated

Warranty
5 Year Limited

ECM

Economic Summary

ECM	
GHG	

Existing Condition

EC BM HVAC D EC

F

B BM F HVAC

F D

A

M H H

E E

M C

E E A

F D A F F D H HVAC A

Recommendation

[illegible]

[illegible]

[illegible]

C[illegible] E[illegible] F[illegible] [illegible] K

[illegible] G[illegible]

[illegible] [illegible] [illegible] [

[redacted] ECM [redacted] E[redacted] L[redacted]

Economic Summary

ECM[redacted]
E[redacted]
A[redacted] M[redacted] D[redacted]
[redacted] G[redacted]
E[redacted] C[redacted]
E[redacted] I[redacted] C[redacted]
[redacted]
M[redacted] C[redacted] M[redacted]

Existing Condition

[redacted]

- A[redacted]
- E[redacted] CFL [redacted]
- [redacted]

[redacted]

Recommendation

[redacted] LED [redacted] LED [redacted]

[redacted] LED [redacted]

F[redacted] CFL [redacted]

F[redacted]

F[redacted] LED [redacted]

[illegible]C[illegible]E[illegible]F[illegible] [illegible]K

[illegible] G[illegible]

[illegible] D[illegible] [illegible] [illegible] [

[illegible] M[illegible] M[illegible] H[illegible] F[illegible] [illegible] M[illegible] B[illegible] E[illegible] L[illegible]

[illegible] E[illegible] [illegible] MH [illegible] LED [illegible] [illegible] LED [illegible] C[illegible]

[illegible] L[illegible] [illegible] [illegible]

[illegible]

[illegible] M[illegible] H[illegible] F[illegible] [illegible] M[illegible] B[illegible] E[illegible]

[illegible] E[illegible] H[illegible] LED [illegible] LED [illegible] C[illegible]

[illegible] L[illegible] [illegible] [illegible]

[illegible]

[illegible] C[illegible] CFL L[illegible] M[illegible] B[illegible] C[illegible] E[illegible]

[illegible] E[illegible] LED [illegible] LED [illegible]

[illegible] L[illegible] [illegible] [illegible]

[illegible] E[illegible]

	E[illegible]				[illegible]				
A[illegible]	F[illegible]	E[illegible] F[illegible]	E[illegible] L[illegible] F[illegible]	E[illegible] L[illegible]	[illegible] L[illegible] F[illegible]	E[illegible] F[illegible]	E[illegible] L[illegible] F[illegible]	E[illegible] L[illegible]	E[illegible] L[illegible] F[illegible]
Parking Lot	400W Metal Halide, pole mounted shoebox	31	1	400	LED shoebox fixture w/ photocell	31	1	150	31
Covered Entrance	42W TRT CFL lamps, recessed cans	83	1	42	9 watt ballast driven TRT CFL replacement lamp	83	1	9	83
Building Façade	400W High Pressure Sodium wall pack	20	1	400	120 watt LED wall pack fixture	20	1	120	20

M[illegible]

[illegible] C[illegible]

[redacted]

[redacted]

[redacted]

SAMPLE BID DOCUMENT SPECIFICATIONS

120W LED Wall Pack - 14,400 Lumens - 400W Metal-Halide Equivalent - 5000K/4000K - Cool White

Part Number: WP-50K120

Product Details

- Die cast aluminum housing with bronze powder coated finish
- Also available with photocell for dusk-to-dawn operation
- DLC Premium - 120 lumens per watt
- 5-Year warranty
- 120-277 VAC

View more details

Specifications

Beam Angle	110 degree
CRI	82 CRI
Comparable Wattage	400 Watt Metal-Halide
Current Draw	1A (1000mA)
Dimensions	View Dimensional Drawings
Dimmable	No
Efficacy	120 lm/w
IP Rating	Weatherproof IP65
Intensity	14400 Lumen
LED Lifetime	50000 Hours

Top

Lens Type	Polycarbonate
Material	Aluminum Housing
Operating Temperature	-20~+45 °C (-4~+113 °F)
Photocell	No Photocell
Replacement For	400 Watt MH
Standards And Certifications	DLC Premium, UL Listed
Total Power Consumption	120 Watts
Type	Standard, Wall Pack
Volts	120~277 VAC

Package Weight: 12lb 5.7oz (5.6kg)

Package Dimensions: 16" (41cm) x 12" (30cm) x 13" (33cm)

All specifications are subject to change without notice.

Part NO	Price	Lumen Per Dollar
WP-50K120		120.05 lumen/dollar
WP-40K120		120.05 lumen/dollar

All specifications are subject to change without notice.

Top

WP-xK120 - LED Wall Pack - 120W (320W MH Equivalent) - 4000K - 14,400 Lumens

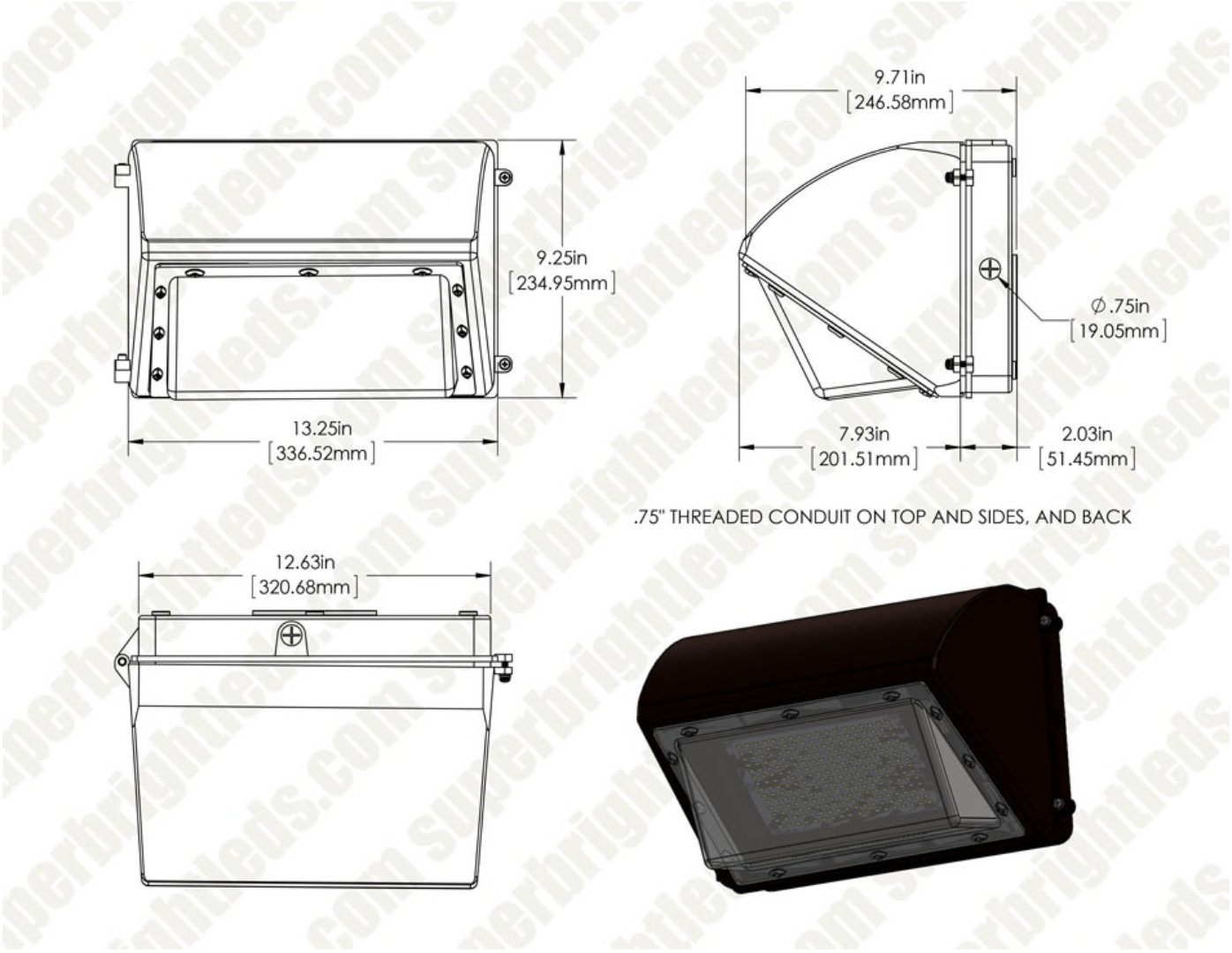

Dimensional Drawings of Wall Pack

Top

Sold by: LEDLightExpert.com
800-674-9420
sales@LEDLightExpert.com

AM DM YM A&D

P/N：RG-NextGen-2--S-G07-150_WCT3A1-abcdef

Note：

The letter "a" can be can be 2 letters represent lamp colors; “BH = Black、WH=White、BR=Brown or Customized”

The letter "b" can be "P" or blank to represent Photocell or None Photocell;

The letter "c" can be "S" or blank to represent Surge protector or None Surge protector;

The letter "d" can be "M" or None, represent Motion sensor or No Motion sensor.

The letter "e" can be "AM","DM","YM","A&D" represent bracket type.

The letter "f"can be any two-digit number to represent CCT. ”40=4000k、45=4500k、50=5000k、57=5700k”

DIMENSIONS

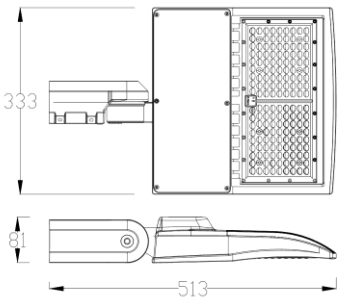

AM

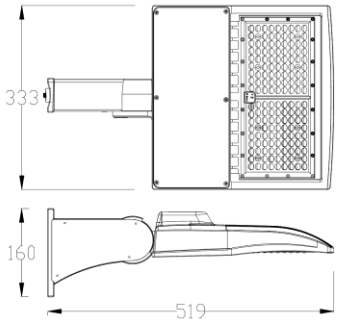

DM

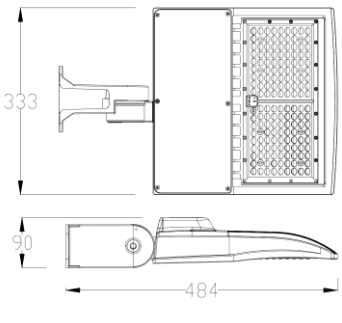

YM

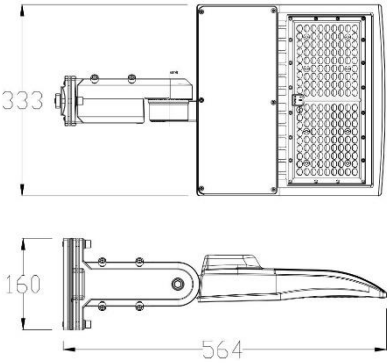

A&D

ADVANTAGE

- UL cUL DLC Premium certificate.
- Seoul /Lumileds Chip, high CRI.
- IP65 driver, input voltage 100-277VAC.
- Output constant current lever can be adjusted through output cable with 1-10V.
- No UV or IR in the beam.
- Easy to install and operate.
- Energy saving, long lifespan.
- Light is soft and uniform, safe to eyes.
- Instant start, NO flickering, NO humming.
- Green and eco-friendly without mercury.
-

APPLICATION

- Outdoor basketball court, tennis court.
- Badminton court, the football field.
- The school playground, stadium.
- Community leisure entertainment plaza, road lamp etc.

SPECIFICATIONS

OPTICAL	Input Power	150W
	Lumen	19500-21000LM
	Lumen Efficacy	125-140 LM/W
	Color Temperature	4000K, 4500K, 5000K, 5700K
	CRI	>70
	Viewing Angle	150*85 Degree（Type Ⅲ）
ELECTRICAL	Input Voltage	100-277VAC 50/60Hz (480vac available to order)
	PF	≥0.9
	THD	≤20%
	Driver Model	Meanwell HLG-150H-48B (1-10Vdc Dimmer)
	Optional Accessory	Photocell / Surge protector/ Motion sensor
MATERIALS	LED Brand	SEOUL / LUMILEDS
	LED Type	SMD3030
	LED QTY	308 PCS
	Housing	Aluminum Alloy
	Housing Color	Black / Brown/ white /
	Waterproof Rating	WET（IP65）
OTHERS	Operating Temperature	-20℃ TO 40℃
	Operating Humidity	20％-90％ RH
	Storage Temperature	-30℃ TO 80℃
	Storage Humidity	10％-95％ RH
	Warranty Time	5 Years

DLC Premium Rated – A Tougher Certification

Not an initial light spike! DLC Premium requires 90% Light Maintenance for over 36,000 Hours, Dark Sky Compliance and Additional Performance Criteria Demands!

Model# RG-NextGen-2-S-G07-150WCT3B1-a[P;blank][S;blank][M;blank]e57

Manufacturer: RuggedGrade
Brand: RuggedGrade
Technical Requirements Version: 4.3
Date Qualified: 05/16/2018
Product ID: PLEC6X5OS45Z

Categorization

Main: Outdoor Luminaires
General Application: High Output
Primary Use: Architectural Flood and Spot Luminaires
Classification: Premium
Is Parent Product: No
DLC Family Code: NANOUI
Listing Status: Listed

Reported Data | Zonal Lumens | Spacing Criteria | Product Features | Version History | Family Data

Light Output: 20050 lm
Wattage: 155.68 W
Efficacy: 128.79 lm/W
Power Factor: 0.9
CCT: 5700 K
CRI: 70
Total Harmonic Distortion: 15 %

LIGHT DISTRIBUTION TESTING PARAMETERS

Luminaire Property

Luminaire Manufacturer:
Voltage: 199.5 V
Current: 0.7751 A
Power: 152.47 W
Power Factor: 0.9836

Photometric Results

IES Classification: Type III
Longitudinal Classification: Medium
Total Rated Lamp Lumens: 19179.2 lm
Measurement Flux: 19179.2 lm
Efficiency: 100%
Downward Ratio: 100%
Upward Ratio: 0%
Luminaire Efficacy Rating (LER): 125.79
Central Intensity: 4647.29 cd
Max. Intensity: 6975.57 cd
Pos of Max. Intensity: H22.5 V69

Luminous Intensity Distribution Curve

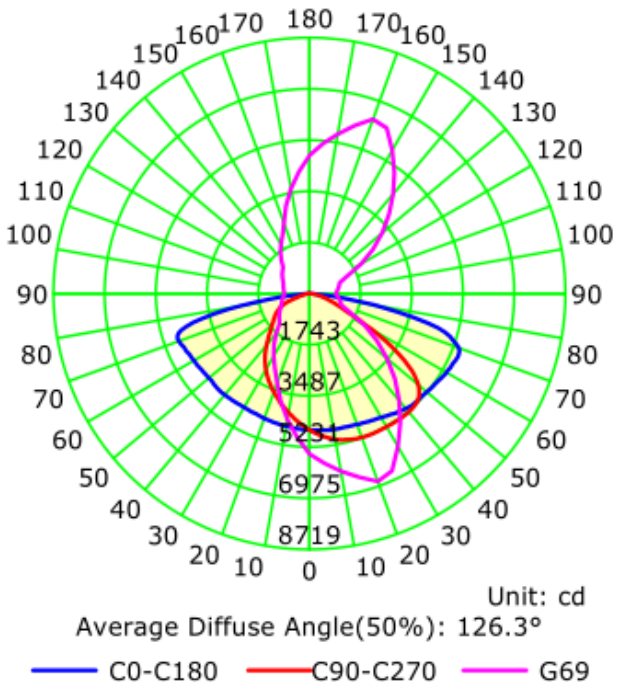

Average Diffuse Angle(50%): 126.3°

C0-C180 C90-C270 G69

The Average Illuminance Effective Figure

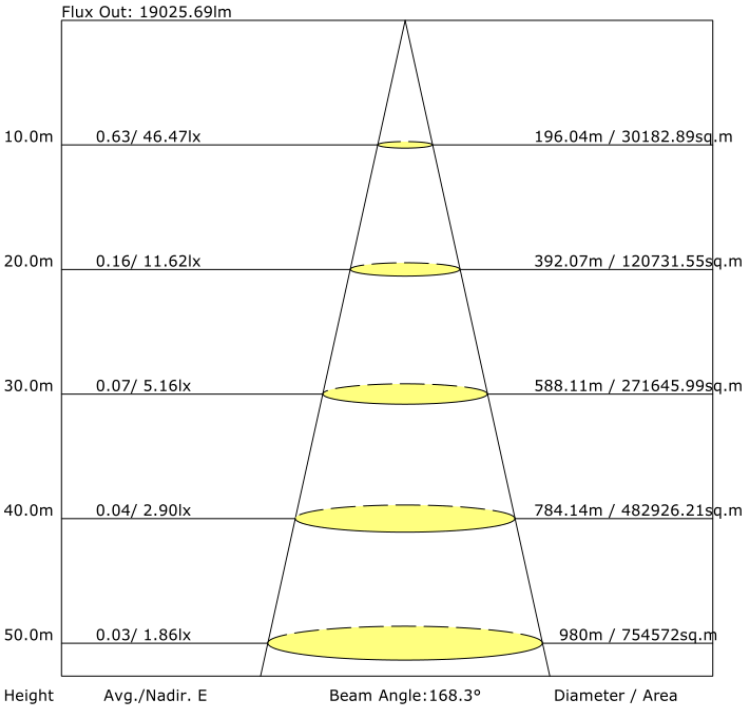

PACKAGE

Stent Type	Lamp Net Weight	Size	Qty / Carton	Gross Weight / Carton
AM	5.4KG	585*385*160 MM	1 PC	6.3KG
DM	5.9KG	585*385*160 MM	1 PC	6.8 KG
YM	5.1 KG	585*385*160 MM	1 PC	6KG
A&D	6.3KG	585*385*160 MM	1 PC	7.2 KG

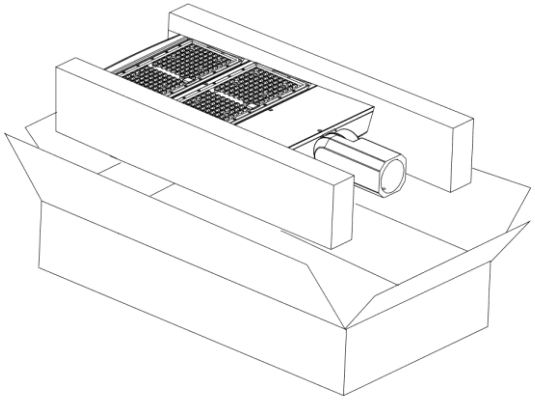

150 Watt NextGen II with Slip Fit

Arm Mount is 22 Inch / 564mm Long and Yoke Mount is 19 inch 484mm Long

NOTICE FOR USER

- Please turn off power before install or change assembly parts.
- The input voltage and lamps should be matched, after connecting the power line, Please make sure the wiring section is insulated.
- No-professionals, must not install and disassemble the lamps.

TROUBLE SHOOTINGS

Troubles	Check points
Flickering of the light	Turn off the power and turn on again in 3 minutes. If same phenomena occur, then call agencies.
Out of working	Please check the connection.

S29850

9WPLH/LED/830/DR/4P
9W LED PL 4-Pin; 3000K; 950 Lumens; G24q base; 50000 Average rated hours; 120 Deg. beam spread

S29850

Features
- Replaces 26, 32, and 42 watt CFLs
- Direct Replacement - for use with Electronic, Instant Start, Rapid Start, and Programmed Start ballasts with no rewiring required. Ballast required.
- Instant on to full brightness / no flickering
- Horizontal operation
- Up to 70% energy saving
- Long life - 50,000 hours
- 5 year warranty

*Ballast required (See Ballast Compatibility Chart)

Item Number	UPC	Watts	Fluorescent Equivalent	Lamp Shape	Base	Lamp Code	Dimmable/Non-Dimmable
S29850	045923298509	9	26, 32, and 42 watt CFL	PL	G24q	9WPLH/LED/830/DR/4P	Non-Dimmable

Finish	MOL In Inches	MOD In Inches	Initial Lumens	Average Rated Hours	Kelvin Temp	Color	CRI
Frost	6-5/8"	1-3/32"	950	50000	3000	Soft White	82

Beam Spread Deg	Operating Temperature	Package Type	CEC Status	DLC ID:	RoHS Compliant	UL or ETL Listed	UL Classification
120	-20C (-4F) to a maximum of +45C (+113F)	Box	Lawful for sale in California	PLJAGBSSPJZJ DLC Search	Yes	Yes	cULus Classified - Damp Location Rated

Warranty
5 Year Limited

[illegible] ECM [illegible] K[illegible] E[illegible] FD

Economic Summary

ECM[illegible]
E[illegible]
A[illegible] M[illegible] D[illegible]
[illegible] G[illegible]
E[illegible] C[illegible]
E[illegible] I[illegible] C[illegible]
[illegible]
M[illegible] C[illegible] M[illegible]

Existing Condition

[illegible]

Recommendation

[illegible]

F[illegible] E[illegible] FD K[illegible] H[illegible] L[illegible]

C[illegible]E F[illegible] [illegible]K

[illegible] G[illegible]

[illegible] C[illegible]

[illegible] A[illegible] [illegible] [illegible] [illegible] [illegible] [illegible] [illegible] [illegible] C[illegible] C[illegible] M[illegible] [illegible] [illegible] [illegible] [illegible] [illegible] [illegible] [

[illegible] [illegible] [illegible] [

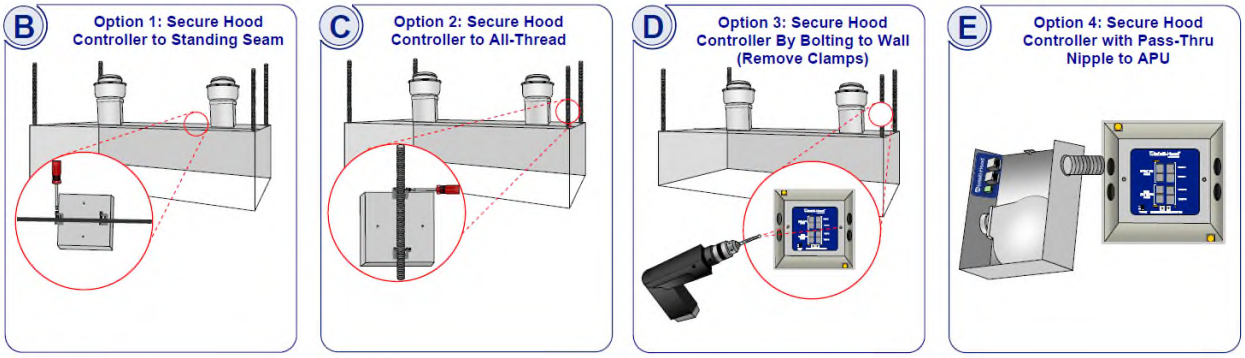
B
Option 1: Secure Hood Controller to Standing Seam
C
Option 2: Secure Hood Controller to All-Thread
D
Option 3: Secure Hood Controller By Bolting to Wall (Remove Clamps)
E
Option 4: Secure Hood Controller with Pass-Thru Nipple to APU

[illegible]

[illegible]

[illegible]

[illegible] C[illegible] [illegible] A[illegible]

[illegible]

[illegible] [illegible] A[illegible] B[illegible] [illegible] [illegible] [illegible] C[illegible] [illegible] EBB [illegible] AABC [illegible] [illegible] [illegible] [illegible] [illegible] [illegible] [illegible] [illegible]

[illegible] C[illegible] [illegible] [illegible] [illegible] [illegible] [illegible]

[illegible] C[illegible] [illegible] [illegible] [illegible] [illegible] [illegible] [illegible] [

[illegible]AM[illegible]LE [illegible] D[illegible] C[illegible] [illegible]ECIFICA[illegible]I[illegible] [illegible]

INTELLI-HOOD®

INTELLI-HOOD® Controls: The Industry Standard

The Melink Intelli-Hood controls are the industry standard for commercial kitchen ventilation systems. Mechanical engineers, foodservice consultants, energy service companies, and chain operators are specifying them on thousands of hoods for both new and existing facilities around the world.

Savings & Benefits

The Intelli-Hood controls reduce your exhaust and make-up fan speeds during idle, non-cooking conditions. **This yields fan energy savings of up to 97% and conditioned air savings of up to 70%. The result is a typical payback of 1- 3 years.**

More than 10,000 Installations Worldwide

Realizing the huge potential for fan energy and conditioned air savings, Melink pioneered the demand ventilation system for use in various food service facilities more than 23 years ago. Since then, we have completed more than 10,000 installations in:

- Restaurants
- Supermarkets
- Hotels
- K-12 Schools
- Colleges & Universities
- Hospitals
- Government Buildings
- Military Facilities
- Corporate Dining
- Clubs

Melink's patented technology is the difference - providing superior performance and energy savings

Note: The red line represents an infrared beam that detects smoke and vapors inside the hood, increasing the fan speed to 100% only when necessary.

Intelli-Hood® Advantages

Melink pioneered demand ventilation controls for commercial kitchen hoods over 23 years ago. The advantages of this extensive experience & expertise are:

- Optic Sensors allow a lower minimum speed for greater energy savings
- Optic Sensors ensure robust capture and containment of all smoke
- Intelligent algorithms provide automatic daily calibration
- Plug and play cables eliminate installation problems
- Remote monitoring allows energy savings to be verified
- Melink national network of trained technicians is best in industry

INTELLI-HOOD® Saves up to 97% in Fan Energy and 70% in Conditioned Air

Most commercial kitchen hoods operate at 100% capacity all day long, even during idle, non-cooking conditions. Melink was the first to solve this industry problem through variable-speed control.

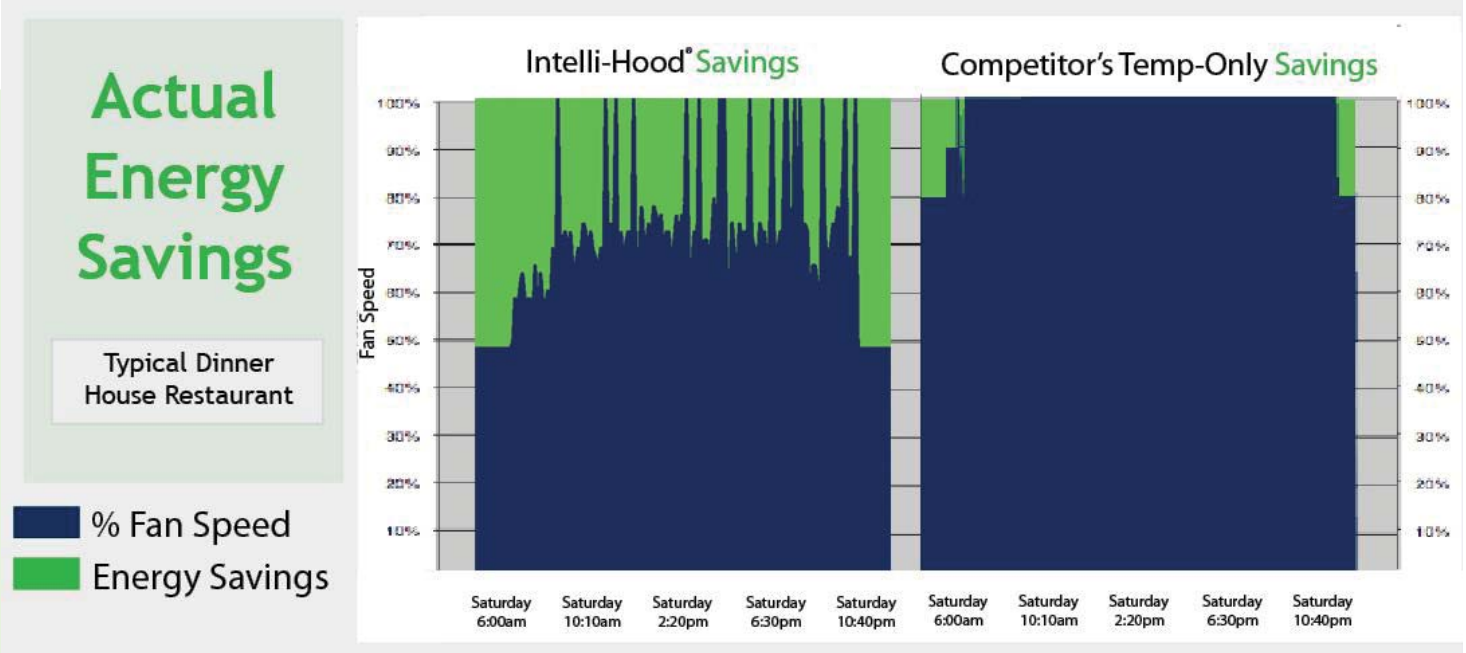

Simple to Install & Operate

The Intelli-Hood controls are easily installed on new hoods and retrofitted on existing hoods. The Temperature and Optic Sensors get mounted inside the hood/duct, and the Touchpad, System Controller, and Variable-Speed Drives typically get mounted in an end-cabinet or on a kitchen wall. The System Controller can control up to 30+ hoods with a Hood Controller on each hood.

To operate, the cook/chef simply presses the light and fan switch on the Keypad, and the system begins operating. When the cooking appliances are turned on, the fan speeds increase based on the exhaust air temperature. During actual cooking, the speeds increase to 100% until the smoke/vapor is removed.

Touchpad

What Our Customers Say About INTELLI-HOOD®

"HEI Hotels and Resorts established its energy conservation guidelines that required all energy-saving renovations and upgrades deliver a ROI in three years or less. We achieved this goal by implementing standard energy-saving measures including the Melink Intelli-Hood kitchen exhaust control system."

- Bob Holesko, Vice President of Facilities for HEI Hotels and Resorts

"The best thing a hotel can do to reduce its environmental footprint is to reduce its energy use. The Melink Intelli-Hood system is one promising way to do so. Our Engineering Department working with the Engineers from each of our Hotel brands has fully evaluated Intelli-Hood and everyone is convinced that this is one of our most cost-effective paths to sustainability."

- Randy P. Gaines, Vice President Engineering Americas for Hilton Worldwide

"The day we started the hoods in the Wine Spectators Greystone Restaurant, the manager commented on how much the Melink system had improved the dining experience for the guests. In addition, the chef instructors commented that it was nice to talk and give cooking demos to the students with having not to yell over the noise of the hoods! The best part of installing the Intelli-Hood is the energy and money we are saving."

- Greg Phipps, Director of Facilities, Sodexo Education Facilities - The Culinary Institute of America at Greystone

Photo Courtesy of Greenheck Fan Corporation

IH122012

About Melink

Melink Corporation is a provider of energy efficiency and renewable energy solutions for commercial and institutional facilities. The company offers building commissioning services, kitchen ventilation controls, and solar PV systems.

Melink's corporate headquarters is LEED Platinum certified. It is also a Net-Zero Energy building making it one of the greenest buildings in the world.

To learn more about Melink, visit our website at www.melinkcorp.com.

5140 River Valley Road
Milford, OH 45150

p 513.965.7300
f 513.965.7350
w www.melinkcorp.com

Melink®
Energy solutions for a brighter tomorrow™

Intelli-Hood®
Melink Corporation

Product Specification

Melink®
Energy solutions for a brighter tomorrow™

●Specifications are subject to change as updates are completed●

melinkcorp.com 5140 River Valley Road Milford, OH 45150 USA 513.965.7300

Intelli-Hood®

Intelli-Hood System Overview

1 SYSTEM CONTROLLER

Receives input from the Touchpad(s) and Hood Controller(s) to control the outputs for the VFDs.

2 HOOD CONTROLLER

Oversees Temperature and Optic Sensors on each hood and sends sensor data to the System Controller via RS-485 communication.

3 Touchpad

Provides switches for operation of hood lights and fans, bypass, monitoring LEDs and programming.

4 OPTIC SENSORS

Monitor the presence of smoke and vapors inside the hood. Send a signal to the Hood Controller to increase fan speed during cooking.

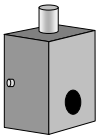

5 AIR PURGE UNITS

Miniature blowers send air into Optic Sensor housings to prevent smoke and grease from collecting on lenses.

6 TEMPERATURE SENSOR

Monitors the exhaust air temperature in the duct and sends a signal to the Hood Controller to vary fan speed in proportion to heat load.

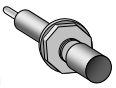

7 VFDs

Variable Frequency Drives receive signals from the Hood Controller to control the speed of the fans based on heat and smoke load.

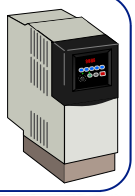

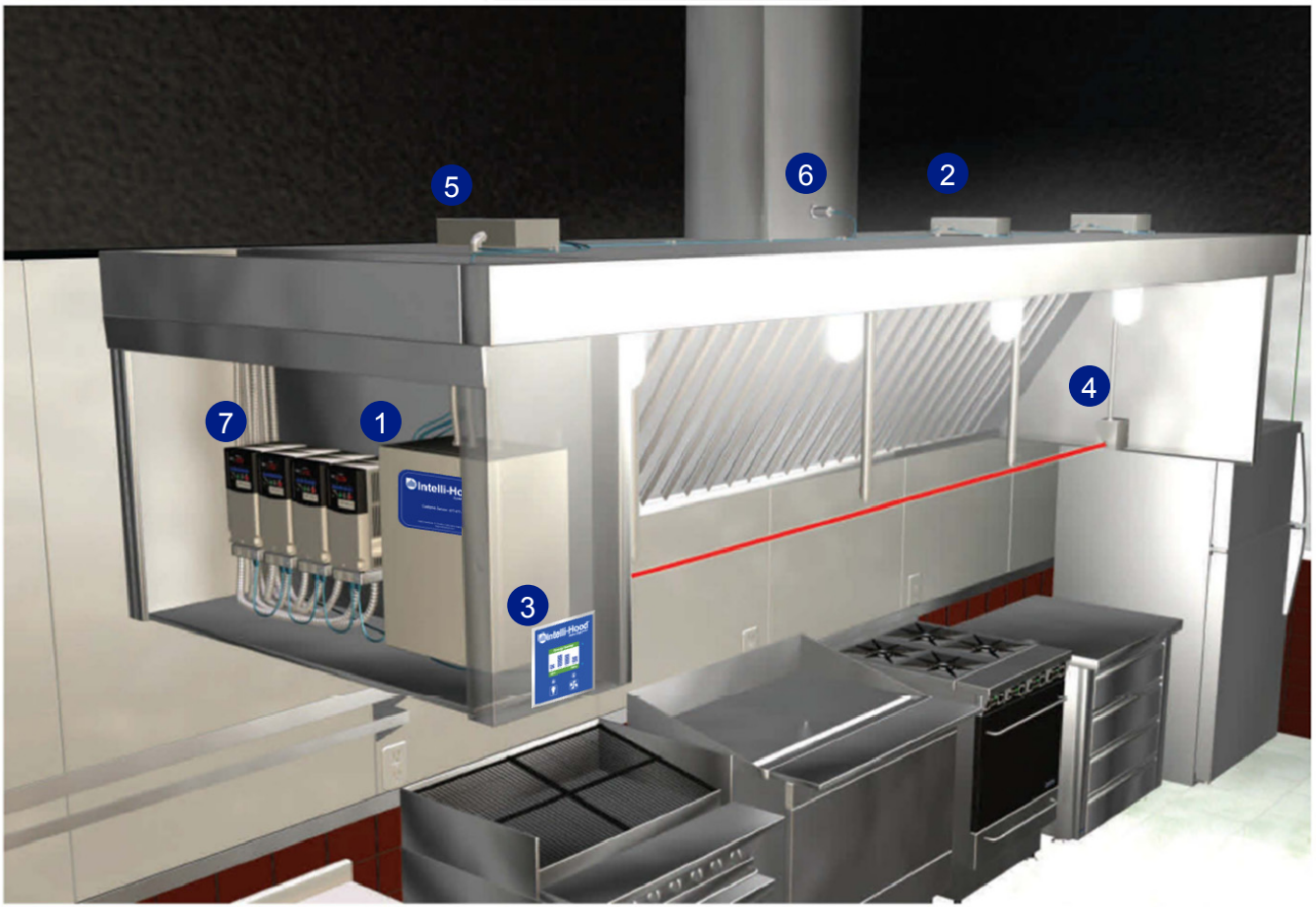

●Specifications are subject to change as updates are completed●

System Controller

Functional Description

The System Controller controls the lights and fans for up to 39 Hood Controllers. It is typically mounted above the ceiling and communicates between the hood sensors and VFDs via low-voltage Hood Network Cables. It is also connected to a Touchpad mounted on the front face of one of the hoods for easy user interface.

Control Specifications

Painted enclosure for durable construction and smooth finish

Communicates to Hood Controller(s), Touchpad(s), Temp Sensor(s), and Optic Sensor(s) via proprietary RS-485 Protocol

- May communicate with up to (39) Hood Controllers, (10) Touchpads, (10) Aux Touchpads, (10) Aux Power Supplies, and (10) Aux Light Controllers. Some limitations apply.

Communicates to Variable Frequency Drives via Modbus Protocol

- Refer to VFD submittal sheet for more information
- Supports up to 64 VFDs

Programmable I/0: (3) Digital Inputs, (4) Digital Outputs, (1) Analog Output, (1) Analog Input

Adjustable Temperature vs. Fan Speed Curve

Automatic On/Off based on Hood Temperature or Clock Schedule

Versatile programming parameters for setting up exhaust and supply airflow control

Removable Memory stores setup files and operational history data

BACnet over TCP/IP Interface

Internet-based Service Application for programming and monitoring

Automatic notification of faults/alarms via BACnet and email

Electrical Specifications

Input Voltage :	120 VAC to 220 VAC
Frequency :	50 Hz to 60 Hz +/- 3%
Power Consumption :	170 W
Ambient Temperature :	5 to 40°C, 32 to 120°F
Line Voltage Output Power Capacity:	15A General Purpose Load, Fused 6A Tungsten Load

Low Voltage plenum-rated, shielded cables to VFD(s), Optic Sensors, APU(s) and Temperature Sensors

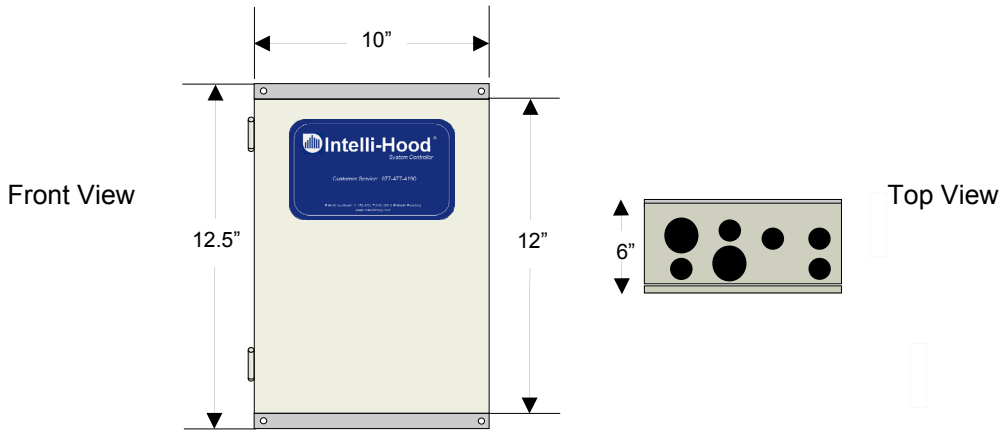

●Specifications are subject to change as updates are completed●

Hood Controller

Functional Description

The Hood Controller oversees Temperature and Optic Sensors on each kitchen hood and sends the sensor data to the System Controller via RS-485 communication.

Mechanical Specifications

Galvanized Steel Enclosure, 7”x7”, 2.1” tall

Temperature Rating: 0 to 49°C, 32 to 120°F

Steel Beam Clamps for installation on hoods or other mechanical structures above hood.

(4) 3/4” conduit holes for connections of Intelli-Hood Hood Network cables

(4) 3/4” conduit knockouts for connections of Intelli-Hood Hood Network cables

Electrical Specifications

Low Voltage: 24VDC from the Hood Network, via Hood Network Cables

Power Consumption: A fully loaded Hood Controller with four temperature sensors, two air purge units, and one set of optic sensors consumes approximately 15W.

Front View

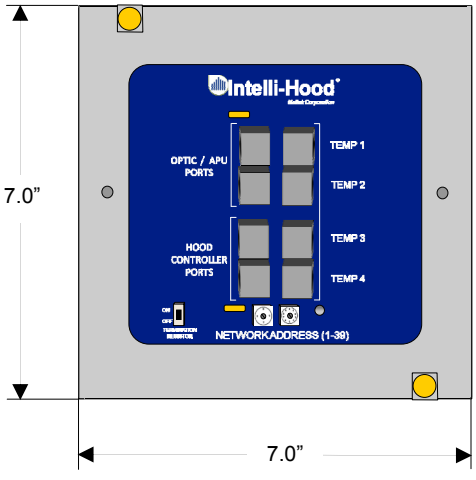

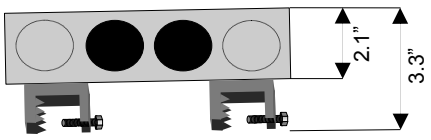

Side View

●Specifications are subject to change as updates are completed●

Touchpad

Functional Description

The Touchpad is the human interface point of the Intelli-Hood system. FANS and LIGHTS switches provide interface points of kitchen staff to control the hoods. A full-color screen displays the status of the fans and sensors. Setup switches provide a means of programming the system.

A System Controller may have up to ten (10) Touchpads connected to it. Programmable parameters allow the Setup Technician to dictate Touchpad and Hood relationships. Every System Controller is required to have at least one (1) Touchpad device connected to it to allow for human interface to diagnostics and programming parameters.

General Specifications

Full Color Screen: 2.5” diagonal, QVGA resolution, displays operating status and programming menus

Switches:	FANS:	Changes system from Energy Saving Mode (fans running) to Standby Mode (fans off)
	LIGHTS:	Changes state of line voltage relays which may be used to control Hood Lights circuits.
	Soft Keys:	Allow user to boost fan speeds to full speed, access programming menus, access diagnostic and help screens

Stainless steel cover plate (304L) for durable construction and smooth finish

Synthetic membrane keypad for water protection

Temperature Rating: 5 to 40°C, 41 to 104°F

Low voltage: 24VDC from the Hood Network, via Hood Network Cable

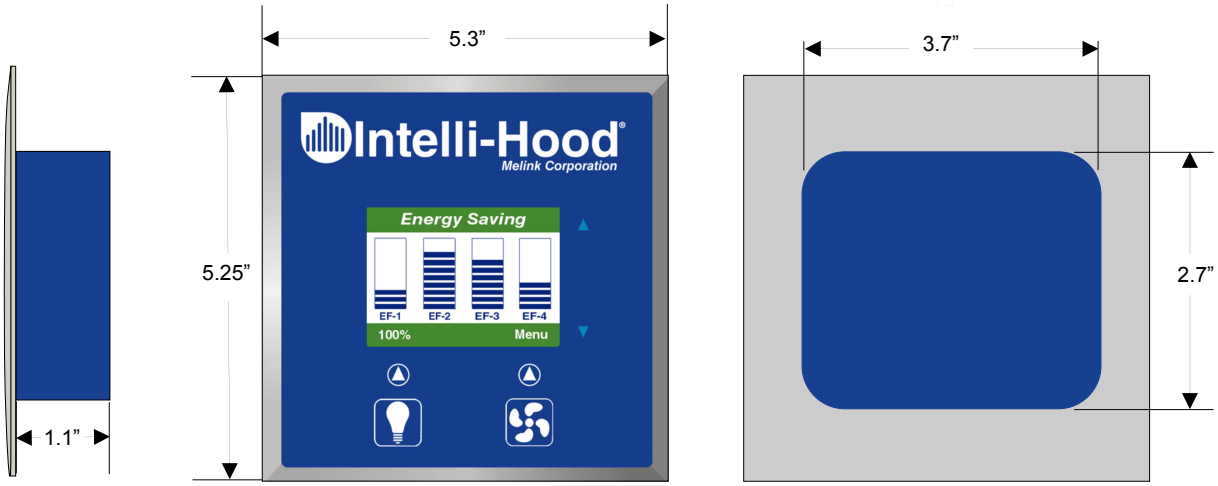

●Specifications are subject to change as updates are completed●

Temperature Sensors

Functional Description

A three-wire platinum resistive temperature device (RTD) sensor encased in a stainless steel tube. Threaded housing is designed to be assembled into UL-listed “Quick-Seal” exhaust duct fittings. Temperature Sensors are wired to the Hood Controllers via Hood Network Cables.

Standard sensors are installed in exhaust ducts, while Canopy sensors are installed in the hood canopy to provide enhanced automatic on/off functionality.

General Specifications

Stainless Steel Probe: 0.25” outside diameter, 2 lengths available (Standard and Canopy)

Three-Wire Configuration

Brass Body, ½” external pipe thread

8 pin, RJ-45 connector

Temperature Rating: 0 to 535°C, 32 to 1000°F

RTD Rating: 100 Ohms with 0.385 platinum coefficient

Electrical Connection: Hood Network Cable

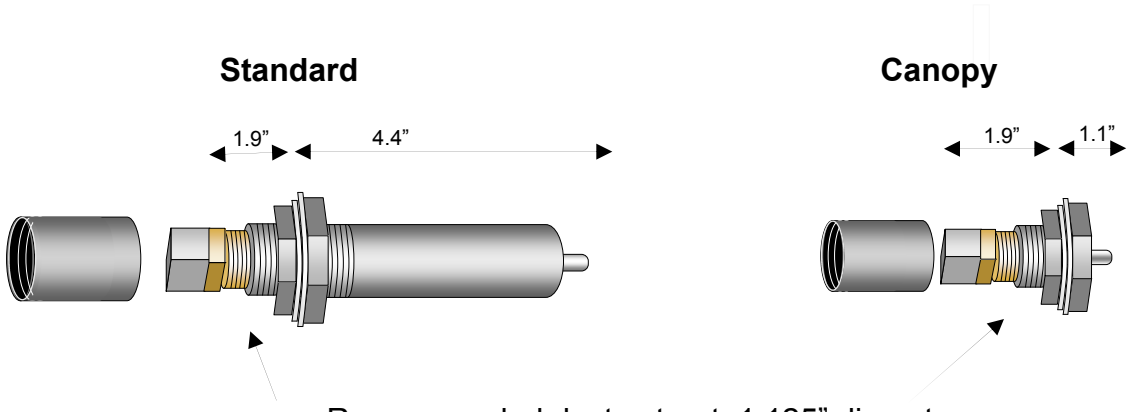

Recommended duct cut-out: 1.125” diameter.

Optic Sensors

Functional Description

The Optic Sensors consist of an Emitter and a Receiver which are installed on opposite ends of the kitchen hood. An infrared beam spans the length of the hood to detect any smoke or other vapors generated by the cooking appliances. Upon detection, a signal is sent to the System Controller which automatically ramps the associated fan(s) to 100% speed until the effluent is evacuated. Optic Sensors are wired to the Hood Controllers via Hood Network Cables.

General Specifications

Stainless Steel Housing for durable construction and smooth finish

Optic Span: 3 to 40 feet (automatic gain adjustment for distance)

Auto-calibration: Every day at start-up or 24 hours

Conformal-coated circuit boards and water-tight cable connectors at sensor PCB connections

Temperature Rating: 0 to 85°C, 32 to 185°F

Response Time: 0.2 seconds

Low Voltage: 12VDC from the Hood Controller, via Hood Network Cable

Ambient temperature: Max 105F purge air

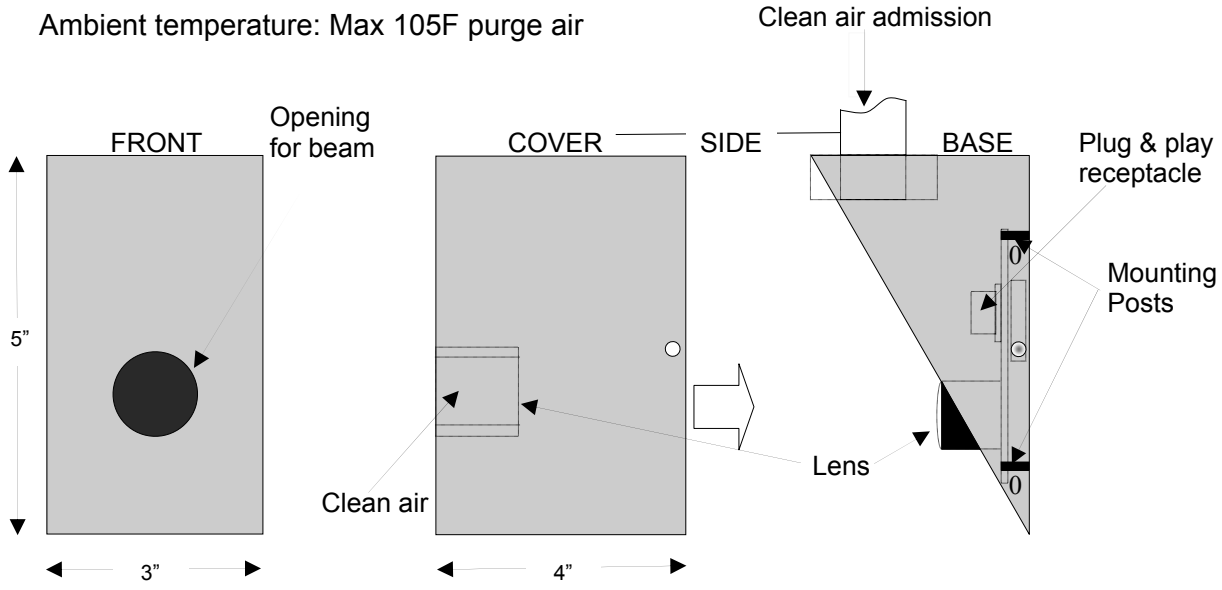

●Specifications are subject to change as updates are completed●

Air Purge Unit

Functional Description

The Air Purge Unit (APU) consists of a miniature blower in a steel box, mounted on each end of the hood above the optic sensors. The purpose of the APU is to pressurize the optic sensors housings with clean air to prevent grease vapors from fouling the lens. The blowing air also cools the optic circuit boards.

The stainless steel conduit pipe that connects the APU and Optic Sensor provides a path for the air flow and optic sensor control cable.

General Specifications

Enclosure constructed of 18 gauge galvanized steel

Adjustable support leg

Blower fan bearings permanently lubricated

Temperature Rating: 0 to 51°C, 0 to 125°F

Low Voltage: 12 VDC from the Hood Controller, via Hood Network Cable

Power Consumption: Approximately 7W

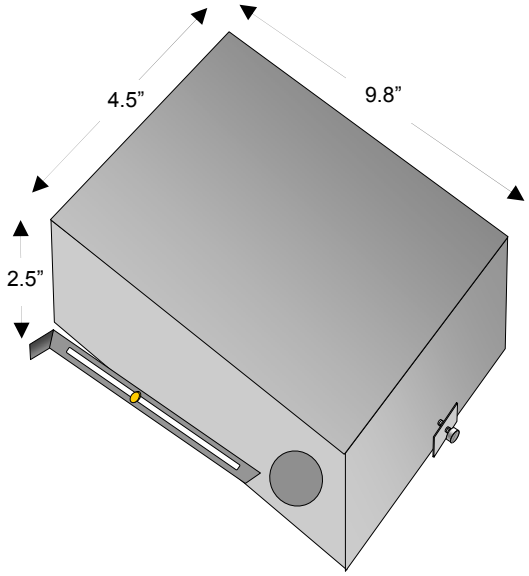

●Specifications are subject to change as updates are completed●

Variable Frequency Drive

Functional Description

The electronic motor starter is a variable frequency drive (VFD) which is used to control the exhaust and supply fan motors. The VFD modulates the speed of the fan motors by varying the output voltage and frequency based on a serial RS-485 signal received from the System Controller. The VFD also sends a feedback signal to the System Controller in order for the Touchpad to display the actual speed of the motor.

Mechanical Specifications

NEMA 1 Enclosure.

Soft-start capability.

Digital keypad displays output frequency, current, voltage, and allows programming for field modifications.

Protective Functions: motor overload, overheating, overcurrent, overvoltage, output shorts, etc.

High and low frequency limiters.

Adjustable torque boost.

Daisy-chained via Hood Network Cables

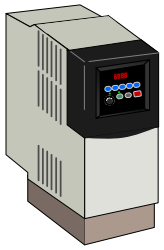

Electrical Specifications

Input Voltage :	200-240 V/1ϕ AC, 200-230 V/3ϕ AC, 380-480 V/3ϕ AC, or 460-600 V/3ϕ AC
Input Frequency :	50 Hz to 60 Hz +/- 3%
Output Voltage :	80-240 V/ 3ϕ AC or 160-480 V/ 3ϕ AC
Ambient Temperature :	-10 to 50°C, 14 to 122°F
Humidity :	20%-95% relative humidity (non-condensing)

●Specifications are subject to change as updates are completed●

Hood Network Cables

Functional Description

Custom 8-conductor cables connect the various components of Intelli-Hood. The cable is shielded, plenum rated, UL Type CMP OR CL3P FT-6. Per NFPA 70, the cable is allowed to be run in horizontal plenums and vertical chases without conduit when carrying current-limited low-voltage power and signals as it does with the Intelli-Hood.

Construction Specifications

UL TYPE OR STYLE:	CMP OR CL3P FT-6
PRIMARY INSULATION TYPE:	SGPVC
JACKET THICKNESS:	.015"
JACKET COLOR:	SPECIAL BLUE
JACKET MATERIAL:	CMP
NOMINAL O.D.:	0.190"
TEMP. RATING:	60C
CONDUCTOR/PAIR COUNT:	4 PAIRS
INSULATION THICKNESS:	0.007"
GAUGE & STRANDING:	24 AWG, 7/32 BC
VOLTAGE RATING:	300V
SHIELD:	FFE ALUMINUM POLYESTER
DRAIN WIRE:	24 AWG, 7/32 TC

Stock Pre-Terminated Lengths

2CB3-001: 1’ (0.3m)
2CB3-005: 5’ (1.5m)
2CB3-015: 15 (4.5m)
2CB3-030: 30’ (9.1m)
2CB3-050: 50’ (15.2m)
2CB3-075: 75’ (22.8m)
2CB3-100: 100’ (30.5m)
2CB3-200: 200’ (61m)

Aux Touchpad

Functional Description

The Aux Touchpad is an additional human interface point of the Intelli-Hood system. FANS, LIGHTS, and 100% switches provide interface points of kitchen staff to control the hoods. Indicator LEDs provide status for the FANS, LIGHTS, 100%, and Faults.

A System Controller may have up to ten (10) Aux Touchpads connected to it. Programmable parameters allow the Setup Technician to dictate Aux Touchpad and Hood relationships.

General Specifications

FANS Switch: Changes associated Hoods between Active Mode (fans running) to Standby Mode (fans off)

LIGHTS Switch: Changes state of associated line voltage relays which may be used to control Hood Lights circuits.

100% Switch: Allows user to temporarily boost fan speeds to full speed on associated Hoods.

Stainless steel cover plate (304L) for durable construction and smooth finish

Synthetic overlay for water protection

Low Voltage: 24VDC from the Hood Network, via Hood Network Cable

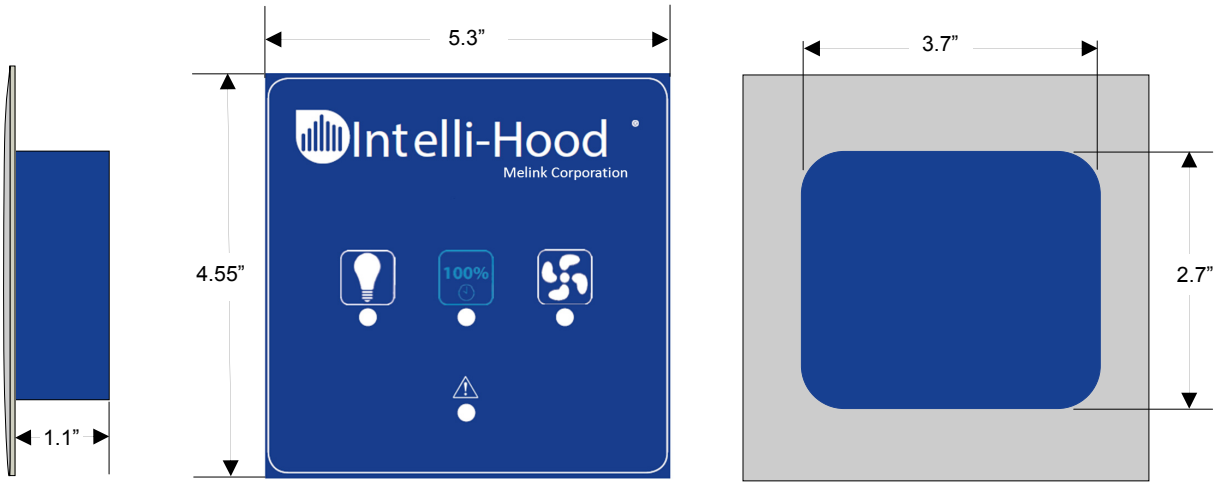

●Specifications are subject to change as updates are completed●

Aux Power Supply

Functional Description

The Aux Power Supply (APS) may be used for large installations additional power is needed to operate Hood Controllers, Optic Sensors, and Touchpads. Since each Hood Network Port is power-limited, depending on the quantity of devices in a series line and the length of cable between devices, Aux Power Supply Device(s) may be needed to provide power to the Hood Network.

A System Controller may have up to 10 Aux Power Supplies connected to it.

Electrical Specifications

Input Voltage :	120 VAC to 220 VAC
Frequency :	50 Hz to 60 Hz +/- 3%
Output Voltage:	24VDC
Frequency :	50 Hz to 60 Hz +/- 3%
Power Consumption :	60W (max)
Ambient Temperature :	5 to 40°C, 41 to 104°F
Hood Network Connection:	24VDC from the Hood Network, via Hood Network Cable

Front View

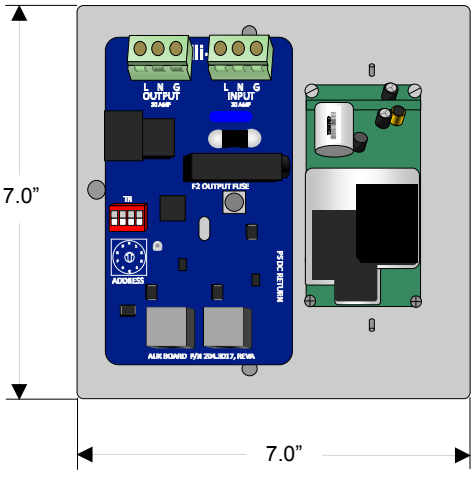

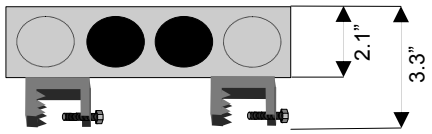

Side View

●Specifications are subject to change as updates are completed●

Aux Lighting Controller

Functional Description

The Aux Light Controller (ALC) may be used for large installations where there is a need to control multiple light circuits. A System Controller may have up to 10 Aux Light Controllers connected to it. Relationships among the ALC and Touchpads are programmable via field editable parameters.

A System Controller may have up to 10 Aux Lighting Controllers connected to it.

Electrical Specifications

Input Voltage :	120 VAC to 220 VAC
Frequency :	50 Hz to 60 Hz +/- 3%
Power Consumption :	5W (not including lights)
Ambient Temperature :	5 to 40°C, 41 to 104°F
Hood Lights (voltage matches input):	120 VAC to 220 VAC (15A max)
Line Voltage Output Power Capacity:	15A General Purpose Load, Fused 6A Tungsten Load

Front View

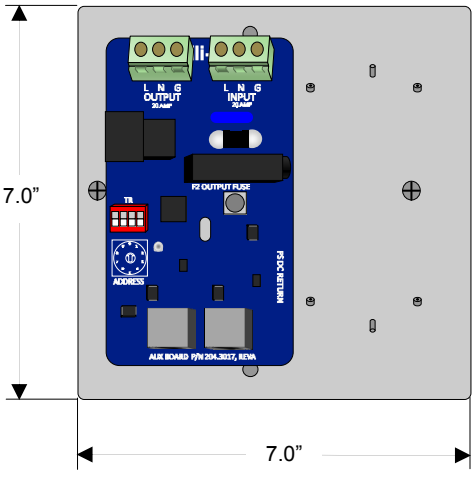

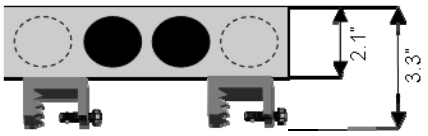

Side View

●Specifications are subject to change as updates are completed●

Intelli-Hood®

OPERATIONS MANUAL

Melink®

Intelli-Hood®

Table of Contents

		Page
Step 1	Start-Up & Programming	4
Step 2	Operation	14
Step 3	Maintenance & Troubleshooting	17
Step 4	Warranty	20

Intelli-Hood®

STEP 1

Recommended Start-Up Procedures

A

- Check each Variable Frequency Drive (VFD) to make sure the HP and voltage rating matches the fan motor.
- Check each Variable Frequency Drive for proper input and output connections.
- Verify each Variable Frequency Drive has separate conduit for the input and output wiring.

B

- Check the I/O Processor for proper input and output connections.
- Check inside the I/O Processor to verify the voltage select switch is set to the proper voltage.
- Check inside the I/O Processor to verify the power switch is turned on and the LED illuminated.

C

- Check the cable connections for each hood to make sure they are secured to the correct receptacles.
- Apply power to the Variable Frequency Drives and I/O Processor by turning on the respective breakers.
- Press the Light and Fan switches on the Keypad to verify the hood lights and fans turn on.

STEP 1

Keypad

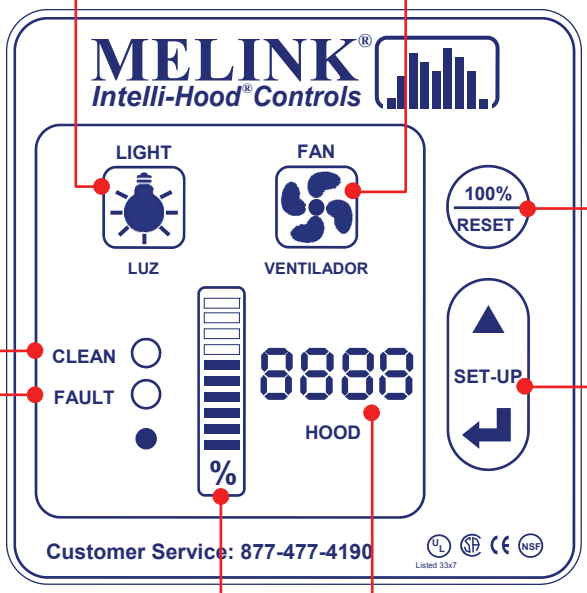

Fan Switch
(turns fans on and off)

Light Switch
(turns hood lights on and off)

Bypass Switch
(operates all fans at 100% speed for a selected time interval and can also reset the system)

Clean Light
(flashes red/green to indicate that Optic Sensors need cleaning)

Set-up
(for programming the system at start-up. Refer to Simplissimo menu)

Fault Light
(indicates a fault condition; refer to the digital display for the type of fault. Green fault light means that a heat notification is being received)

Digital Display
(indicates the hood number during normal operation and displays "E" when in 100% bypass)

Bar Graph
(indicates the % fan speed during normal operation and indicates a menu selection in the programming mode. Also indicates the type of fault for easy trouble-shooting)

STEP 1

Keypad Start-Up

A Press Light Switch

The hood lights turn on.

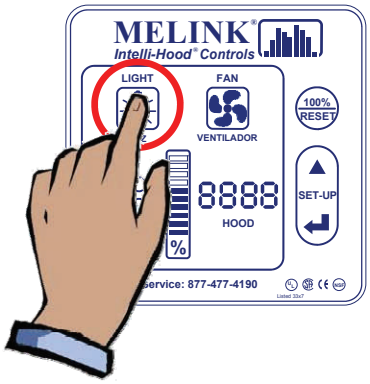

B Press Fan Switch

The hood fans turn on.

Check the lights and displays on the Keypad:

1. Check the CLEAN light. If it flashes red and green, then proceed to Programming to perform the “Optics Alignment” check.
2. Check the FAULT light. If it is illuminated red, then recheck all cable connections, and proceed to Programming to set up Sensors and VFDs for each hood.

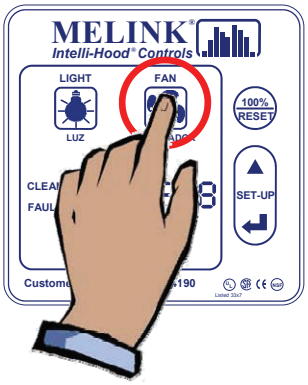

C Check Fan Operation

Go to the roof and check fan operation:

1. Verify the fans are operating, because you may not be able to hear them inside the kitchen if they are running at minimum speed.
2. At the same time, verify correct rotation for every fan being controlled. If not correct, switch two of the three motor leads at the VFD.

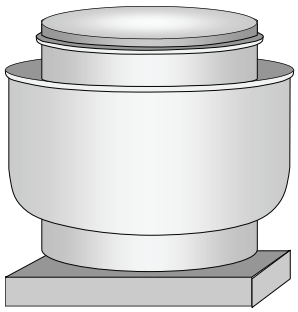

STEP 1

Keypad Start-Up

D Press 100% Switch

Press the 100% / RESET Switch to operate the fans at full speed.

Let the fans run at full speed for about 30 minutes to verify that the VFD does not trip out on overload.

E Program the Controls

You are now ready to program the Intelli-Hood controls using the SET-UP switches on the Keypad.

Refer to the Keypad Lock-Out Feature on page 8 in order to gain access to the Simplissimo Menu shown on the next page.

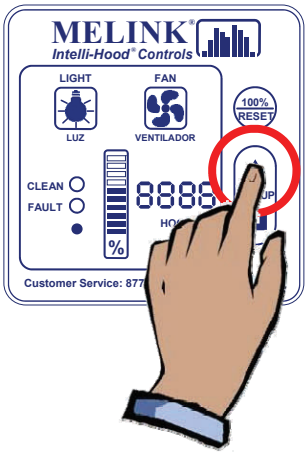

STEP 1

Programming

A Set-Up Mode

To enter SET-UP mode, press both the SELECT switch and the ENTER switch and hold for 15 seconds. When SET-UP mode is accessed, the Keypad will beep three times.

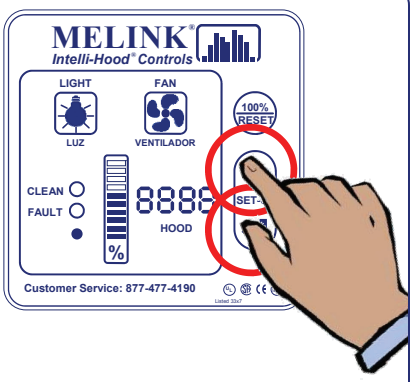

B To Edit Programming

1. After entering SET-UP mode, the Keypad will beep three times; if the system is unlocked, the first 7-segment display will show **-H1-**. If an **L** is shown, unlock system as shown on page 8.
2. Pressing the SELECT switch will change the **-H1-** to a **-H2-** ; pressing the SELECT switch again will change the **-H2-** to a **-H3-** , and so on. Scroll to the desired hood number. The FANS switch may be used to scroll in reverse (The sequence will be: **-H1-** , **-H2-** , **-H3-** , **-H4-** , **-SY-** , **-UF-** , **CAL.-**).
3. Pressing ENTER will move the hood number to the first and second 7-segment displays. The third and fourth 7-segment displays will start with a flashing 01 to signify the parameter number, with the bar graph showing the current setting.
4. Pressing the SELECT switch will scroll to subsequent numbers, moving forward through the parameters. The FANS switch may be used to scroll in reverse.
5. Pressing ENTER makes the third and fourth 7-segment displays solid and the LED in the bar graph will start flashing.
6. Pressing the SELECT or FANS switches will scroll up and down the bar graph. When the desired setting is reached, pressing the ENTER switch will confirm the setting and make the bar graph LED solid (and the third and fourth 7-segment displays will begin blinking again).
7. To exit the hood menu, press the 100% / RESET switch.
8. To exit the SET-UP mode completely, press the 100% / RESET switch again.
9. The Keypad will go back to normal display mode.

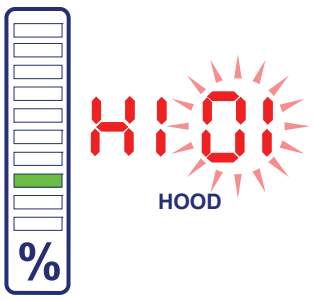

STEP 1

Programming

To Lock Programming

Press and hold the both the SELECT switch and the ENTER switch for 15 seconds. An **-H1-** will show on the 4 -digit display and the Keypad will beep three times.

Press and hold the both the SELECT switch and the ENTER switch for 15 seconds. An **L** will show on the 4-digit display and the Keypad will beep one time.

Press 100% / RESET to exit SET-UP mode.

To Unlock Programming

Press and hold the both the SELECT switch and the ENTER switch for 15 seconds. An **L** (non-flashing) will show on the 4-digit display and the Keypad will beep three times.

Press and hold the both the SELECT switch and the ENTER switch for 15 seconds. An **-H1-** will show on the 4 -digit display and the Keypad will beep one time.

Press 100% / RESET to exit SET-UP mode.

Intelli-Hood®

Intelli-Hood Features & Options

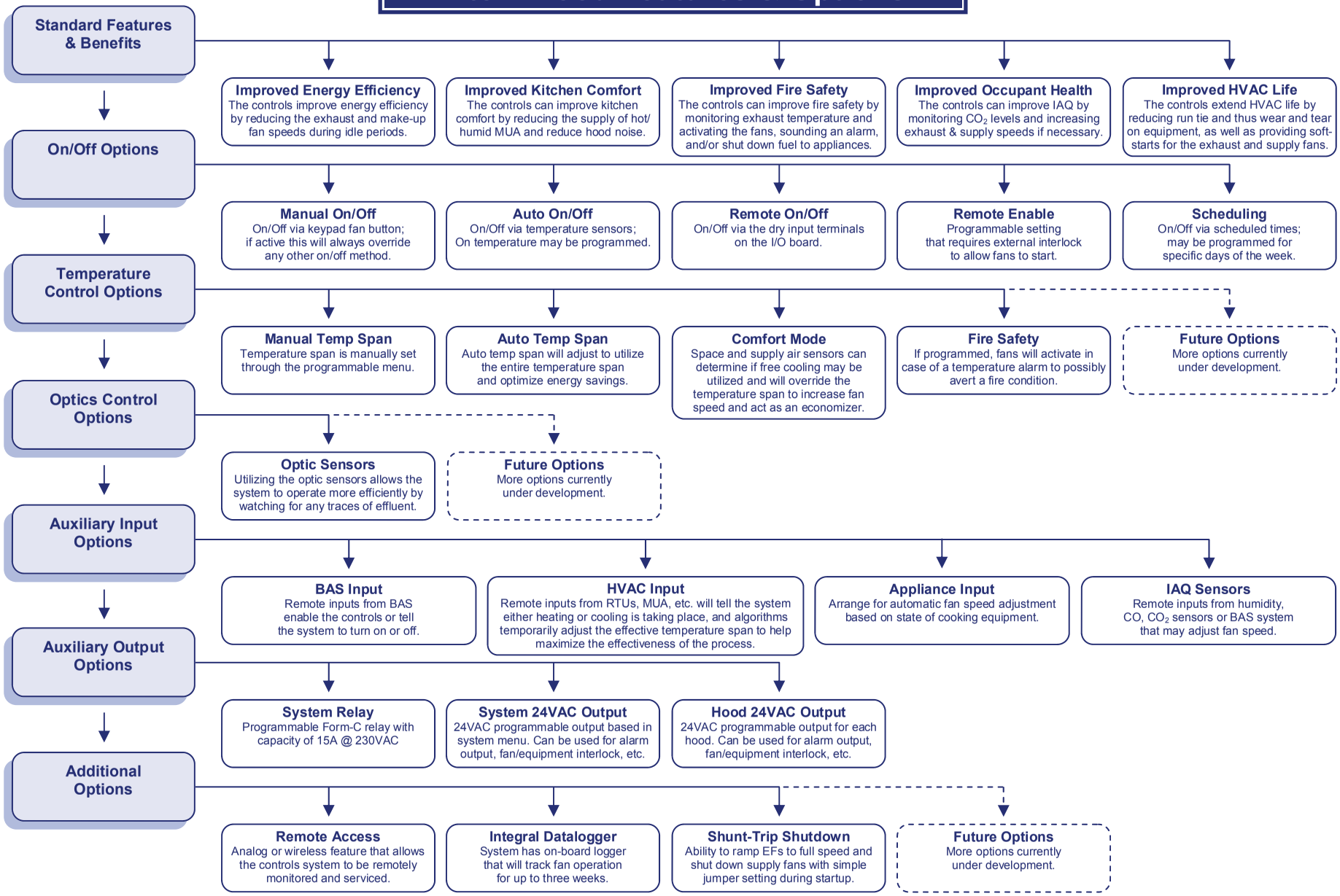

Intelli-Hood®

STEP 1

Programming: *Simplissimo*

HOOD MENU

Basic Settings

(Defaults in Red)

	01	02	03	04	05	06	07	08	09	10
Bar Graph	**Exhaust Temp Span**	**Min. Fan Speed**	**Max. Fan Speed**	**Exhaust Temp. Alarm**	**Hood 24VAC Output**	**No. Hood Sensors**	**Auto On/Off**	**VFD Address**	**Add. VFD Address**	**Short-Cycle Ratio**
10	70-85F	Auto	**100%**	FLASH AUD350F	24/7	**No Sensors**				
9	70-80F	90%	95%	FLASH AUD300F	Fault	1O	*See Scheduling in System Menu*		**No Add. VFD**	
8	**Auto TempSpan**	80%	90%	FLASH AUD250F	Mom Rel	4T/1O			15&16	80%
7	75-150	70%	85%	FLASH AUD200F	MUA Cool	3T/1O			13&14	70%
6	75-140	60%	80%	FLASH AUD150F	MUA Heat	2T/1O	Heat-20%		11&12	60%
5	75-130	**50%**	75%	FLASH 350F	MUA Damper	1T/1O	Heat-15%	**No VFD**	9&10	50%
4	75-120	40%	70%	FLASH 300F	Fans On	4T	Heat-10%	4	8	40%
3	75-110	30%	65%	FLASH 250F	Smoke	3T	Heat-5%	3	7	30%
2	75-100	20%	60%	**FLASH 200F**	Exhaust Temp	2T	Heat-0%	2	6	20%
1	75-90	10%	55%	FLASH 150F	**No**	1T	**No**	1	5	**No**

Advanced Settings

	11	12	13	14	15	16	17	18	19
Bar Graph	**Hood Relay Input (Dry)**	**Relay Inputs to Utilize**	**Optic Sensor Address***	**Scheduling**	**Temp Span Min**	**Auto. On/ Off Temp.**	**CFM Ratio for MUA/ AUX Output**	**Cable Length**	**VFD Software**
10	T-Stat & 90%					100F/85F	None	**Enter cable length**	
9	T-Stat & 80%					95F/80F	9		
8	T-Stat & 75%	None		Sched. 1, 2, 3		90F/80F	8		
7	T-Stat & 70%	System 1, 2		Sched. 1, 3		85F/80F	7		Siemens
6	T-Stat & 60%	Hood & System 2		Sched. 2, 3		95F/75F	6		AC Tech
5	T-Stat & 50%	Hood & System 1		Sched. 1, 2	85F	**90F/75F**	5		A-B PF400
4	100% on Closure	System 2	Hood 4	Sched. 3 Only	80F	85F/75F	4		Yakasawa
3	Rem Enable	System 1	Hood 3	Sched. 2 Only	**75F**	80F/70F	3		ABB
2	Rem On/ Off	**Hood & System 1,2**	Hood 2	Sched. 1 Only	70F	75F/70F	2		IMO PC
1	**No**	Hood Only	Hood 1	**No**	65F	110/95F	**1**		**A-B PF4-40**

FIRMWARE V2. 12

STEP 1

Programming: *Simplissimo*

SYSTEM MENU

(Defaults in Red)

	SY 01	SY 02	SY 03	SY 04	SY 05	SY 06	SY 07	SY 08	SY 09	SY 10
Bar Graph	**4-20mA/ 0-10vdc Aux Out**	**4-20mA Aux In**	**Optics Hang Time**	**System Relay Input 1 (Dry)**	**System Relay Input 2 (Dry)**	**Bypass Timer**	**Comfort Mode Sensors**	**Misc.**	**System 24VAC Output**	**Optics Align-ment Check**
10				T-Stat&90%	T-Stat &90%	4 Hrs			24/7	
9	Ext In			T-Stat&80%	T-Stat &80%	3 Hrs			Fault	
8	VFD Address 4	Aux High		T-Stat&75%	T-Stat &75%	2 Hrs		ConvCool/ WinSB/IB	Mom Rel	
7	VFD Address 3	Aux Avg	180 Sec	T-Stat&70%	T-Stat &70%	1 Hr		Conv Cool/ Int Bar	MUA Cool	
6	VFD Address 2	Aux Sub	90 Sec	T-Stat&60%	T-Stat &60%	45 Min		Win SB/Int Bar	MUA Heat	
5	VFD Address 1	Aux Add	60 Sec	T-Stat&50%	T-Stat &50%	30 Min		Conv Cool Only	MUA Damper	**Exit**
4	Lowest	Average	25 Sec	100% on Closure	100% on Closure	15 Min	Econo + Auto	Win SB Only	Fans On	Hood 4
3	Highest	Subtract	**15 Sec**	Rem Enable	Rem Enable	**10 Min**	Auto Span	Int Bar	Smoke	Hood 3
2	Average	Add	10 Sec	Rem On/Off	Rem On/Off	5 Min	Economizer	Conv Cool/ Win SB	Exhaust Temp	Hood 2
1	**No**	**No**	5 Sec	**No**	**No**	No	**No**	**No**	**No**	Hood 1

	SY 11	SY 12	SY 13	SY 14	SY 15	SY 16	SY 17	SY 18	SY 19	SY 20
Bar Graph	**NO/NC Relay 15A @230VAC**	**Time Set**	**Schedule 1 Active Days**	**Schedule 1 Start**	**Schedule 1 Duration Time**	**Schedule 1 Options**	**Schedule 2 Active Days**	**Schedule 2 Start**	**Schedule 2 Duration Time**	**Schedule 2 Options**
10	24/7	Enter time/ date C1: Hour C2: Minute C3: Day C4: Month C5: Day C6: Year C7: DST		Enter time of day Hour Only 24 Hour Clock	5 hrs			Enter time of day Hour Only 24 Hour Clock	5 hrs	
9	Fault				4.5 hrs				4.5 hrs	
8	Mom Rel		Sun-Thurs		4 hrs		Sun-Thurs		4 hrs	
7	MUA Cool		Sat-Sun		3.5 hrs		Sat-Sun		3.5 hrs	
6	MUA Heat		Fri-Sun		3 hrs		Fri-Sun		3 hrs	
5	MUA Damper		Fri-Sat		2.5 hrs		Fri-Sat		2.5 hrs	
4	Fans On		Mon-Thurs		**2 hrs**	On/Off Sched	Mon-Thurs		**2 hrs**	On/Off Sched
3	Smoke		Mon-Fri		1.5 hr	100% Sched	Mon-Fri		1.5 hr	100% Sched
2	Exhaust Temp		All		1 hr	100% If On	All		1 hr	100% If On
1	**No**		**None**		0.5 hr	**Not Used**	**None**		0.5 hr	**Not Used**

Continued

FIRMWARE V2. 12

Intelli-Hood®

STEP 1

Programming: *Simplissimo*

SYSTEM MENU

(Defaults in Red)

	SY 21	SY 22	SY 23	SY 24	SY 25	SY 26	SY 27	SY 28	SY 29	SY 30	SY 31
Bar Graph	Schedule 3 Active Days	Schedule 3 Start	Schedule 3 Duration Time	Schedule 3 Options	Keypad Function Disable	Cmft. Mode Space Temp	Cmft. Mode Supply Temp	MUA Heat If Kitchen <	MUA Heat If Supply <	MUA Cool If Kitchen >	Add. MUA Address
10		Enter time of day Hour Only 24 Hour Clock	20 hrs			77		74F		80F	
9			18 hrs			76		73F	65F	79F	
8	Sun-Thurs		16 hrs		Byp+Lights	75	72	72F	63F	78F	
7	Sat-Sun		14 hrs		Fans+Byp	74	71	71F	60F	77F	
6	Fri-Sun		12 hrs		Fans+ Lights	73	70	70F	58F	76F	29,30,31
5	Fri-Sat		10 hrs		Bypass	**72**	69	69F	55F	**75F**	30,31
4	Mon-Thurs		8 hrs	On/Off Sched	Lights	71	**68**	68F	53F	74F	29
3	Mon-Fri		**6 hrs**	100% Sched	Fans	70	67	67F	**50F**	73F	30
2	All		4 hrs	100% If On	All	69	66	66F	48F	72F	31
1	**None**		2 hrs	**Not Used**	**No**	68	Tk>To	**65F**	45F	71F	**No**

	SY 32	SY 33	SY 34	SY 35	SY 36	SY 37	SY 38	SY 39	SY 40	SY 41	SY 42
Bar Graph	AUX VFD Software	Gain for AUX Input	Modem Options	Data Log Sample Rate	US / SI Units Selection	Day On/ Day Off Monitoring	Smoke Density	Fire Safety	Full Speed @ Start	Supply Temp Cable Length	Space Temp Cable Length
10		150%								enter cable length	enter cable length
9		140%									
8		130%									
7	Siemens	120%		**5 min**							
6	AC Tech	110%		3 min					5 Min.		
5	A-B PF400	**100%**		2 min					4 Min.		
4	Yakasawa	90%	Wireless	1 min	24H Degrees C		Proportional		3 Min.		
3	ABB	80%	9+Auto-Dial	30 sec	12H Degrees C		Heavy	**All Hoods**	2 Min.		
2	IMO PC	70%	Auto-Dial	10 sec	24H Degrees F	Active	**Medium**	Alarm Hood Only	1 Min.		
1	**A-B PF4-40**	60%	**No**	No	**12H Degrees F**	**Disabled**	Light	No	**No**		

FIRMWARE V2. 12

STEP 2

Sequence of Operation

A Press Light Switch

The hood lights turn on.

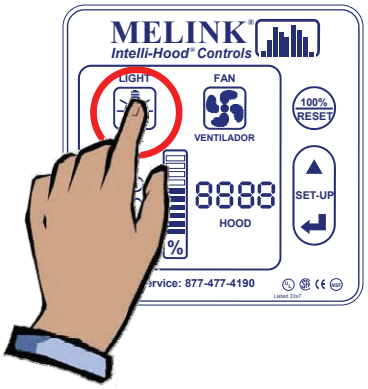

B Press Fan Switch

The hood fans turn on. Fan speed automatically varies with the heat/smoke load generated by the cooking appliances. This reduces hood noise, improves kitchen comfort, and saves energy. The bar graph on the Keypad indicates the fan speed for each hood.

If the CLEAN light flashes red and green, clean the lenses on the Optic Sensors.

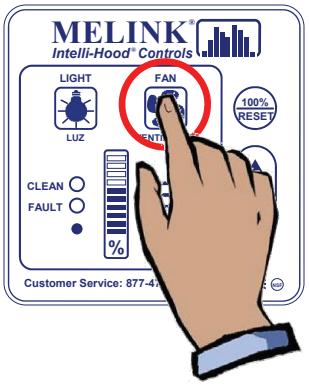

C Press 100% Switch In Case of Emergency

The fans can be operated at full speed like a conventional hood system by pressing the 100% / RESET button. This should only be used if there is noticeable smoke loss and the fans are not already running at full speed. Upon pressing this button, the bar graph will flash 100% speed and the letter “E” will be displayed with each hood designation. After the preset period of time, the fan speed will return to its previous operation mode.

STEP 2

How it Works

D Heat Detection

If the appliances are not turned on, the fan will operate at a minimum speed of 30-50%. Once the appliances are turned on, the fan speed will increase as the exhaust air temperature increases. This normally results in the fan speed increasing to 50-80%.

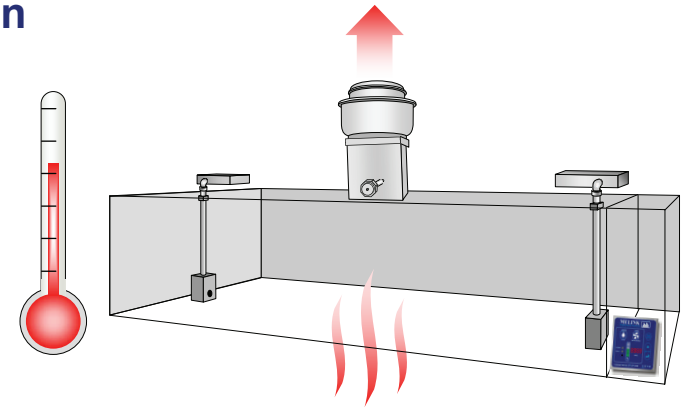

E Smoke Detection

Upon detection of smoke during cooking, the Optic Sensors will bypass the Temperature Sensor and increase the fan speeds to 100%. This ensures the proper removal of smoke as well as compliance with codes that require a minimum air volume and duct air velocity. Once the smoke is removed, the fan speed will decrease based on the exhaust air temperature.

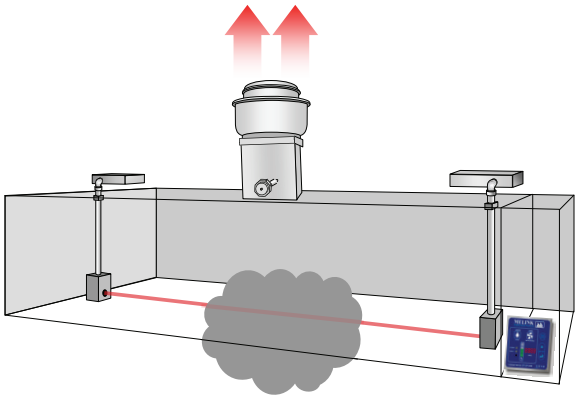

F Quiet Hood Operation

The hoods will sound very quiet when the fans are operating at minimum speed. It may sound like the hood is turned off until the fan speed increases above 50% with the heat and/or smoke load.

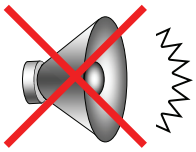

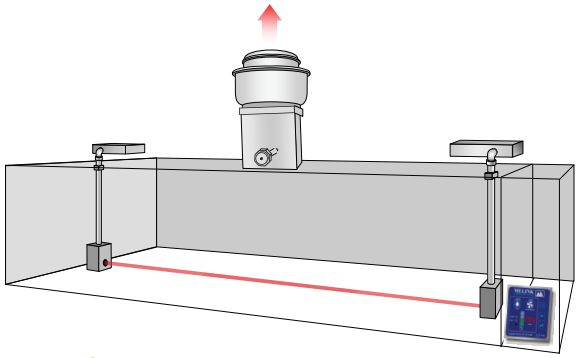

NOTE: Hoods sound very quiet at lower fan speeds.

STEP 2

How it Works

G View Current Hood Exhaust Rates

During normal operation, the Key-pad bar graph will indicate the per-cent fan speed of each hood. The digital display will continually scroll through each hood connected to the system every 5 seconds.

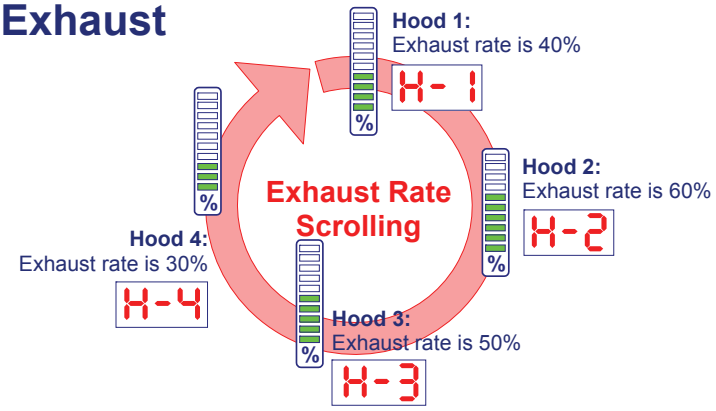

H View Current Temps, Average Exhaust Fan & Current Supply Fan Speed

To view the temperatures and average VFD speeds for each hood, press the selection switch one time. The exhaust temperature will be shown in the digital display, and the VFD speeds will be shown in the bar graph. It will scroll through only once, then return to showing the percent fan speeds.

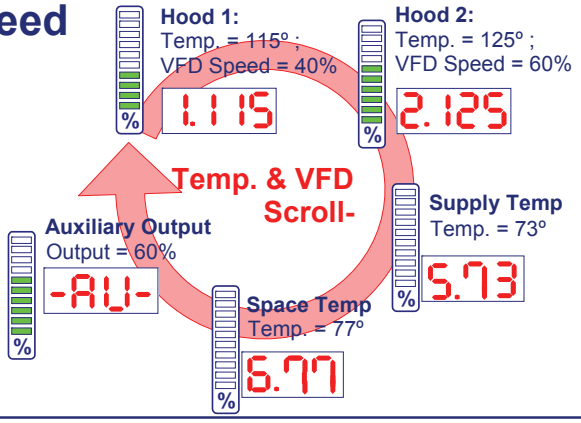

I View Time

To view the time, press the Enter key. The digital display will first show the hour and then the time of day and date. It will show this only once, then it will return to the previous display.

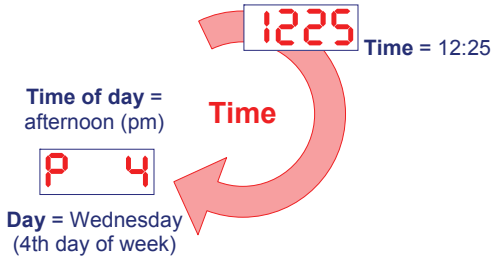

STEP 3

Maintenance

A Optic Sensors

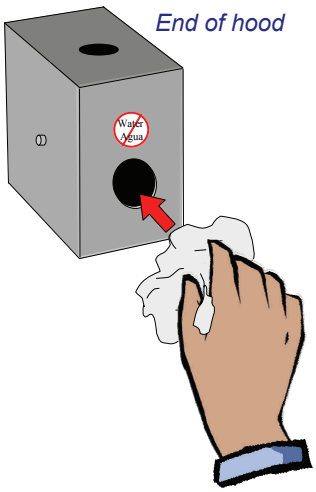

End of hood

If the “Clean” indicator light on the Keypad begins to flash from red to green, the optic lenses need cleaning.

First, wipe off the lenses on each end of the hood with a clean, soft cloth. Press the fan switch off and then on again to initiate automatic calibration of the Optic Sensors now that they have clean lenses. The indicator light should turn green within about five seconds to confirm calibration.

IMPORTANT: Advise your hood/duct cleaner not to spray hot water or steam into the photo housings so that the Receiver and Emitter do not get wet. The photo housings should be covered to ensure protection of these devices.

B Temperatures Sensors

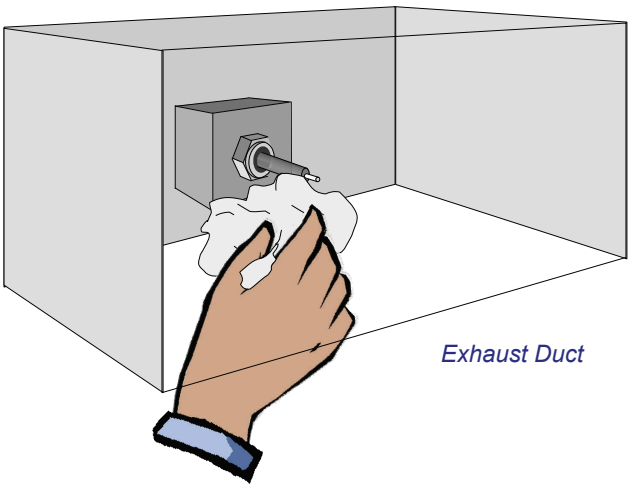

Exhaust Duct

Clean the temperature sensors at least once a year or as needed by simply wiping off any grease with a clean cloth. This will ensure the sensors respond quickly to any change in exhaust air temperature.

STEP 4

Warranty

Returns

No returns will be accepted without prior written approval from Melink Corporation. All returned shipments must be prepaid and are subject to handling charges.

Damaged Shipments

Notify the carrier in the event of damaged shipments, whether they are apparent at the time of delivery or when unpacked. File a complaint with the carrier, as the customer is responsible for the collection of damage claims.

Warranty

To validate the warranty, complete and return the warranty validation form in the Owner's Manual. Complete one form for each system installed and send to Melink Corporation at the following address within 10 days:

Melink Intelli-Hood®
Attn: Warranty Validation
5140 River Valley Road
Milford, OH 45150

Melink Corporation extends this warranty to the original buyer and warrants that Melink products shall be free from original defects in workmanship and material for three years from date of shipment, provided same has been properly stored, installed, operated, maintained, and serviced. This warranty does not apply to products which have been altered or repaired without expressed written authorization from Melink Corporation, or altered or repaired in any way so as to affect its performance or its reliability, nor which have been subjected to misuse, negligence or accident. The buyer assumes responsibility for all risks and liabilities resulting from the use of these products.

Melink Corporation is not responsible for the cost of removal of the defective product or part, damages due to removal, or any expenses incurred in shipping the product or part to or from the plant, or the installation of the repaired or replaced product or part.

Intelli-Hood®

STEP 4

Warranty

Please complete this form and fax to Melink at (513) 527-7023, or send by mail to: Melink Corporation, 5140 River Valley Road, Milford, OH 45150.

Owner _____ **Date** _____

Company _____

Address _____

City _____ **State** _____ **Zip** _____

Country _____

Phone _____ **Fax** _____

Email _____

MODEL _____ (located inside I/O Processor)

SERIAL NO. _____ (located inside I/O Processor)

Installer _____

Address _____

City _____ **State** _____ **Zip** _____

Phone _____

Date of Installation & Start-Up _____

Call Melink Customer Service at 513-965-7300 if you have any questions.

Please let us know how we can improve our Operations Manual.
We want your experience with our product to exceed all expectations.

Intelli-Hood®

INSTALLATION MANUAL

Melink®

Melink Corporation (513) 965-7300 www.melinkcorp.com

Intelli-Hood®

Table of Contents

Step	Installation	Contractor	Page
1	Install System Controller	Electrical	4
2	Install Variable Frequency Drive	Electrical	6
3	Install Touchpad	Mechanical	8
4	Install Temperature Sensor(s)	Mechanical	10
5	Install Canopy Sensor	Mechanical	13
6	Install Hood Controllers	Mechanical	15
7	Install Optic Sensors	Mechanical	17
8	Install Air Purge Units	Mechanical	21
9	Install Cables	Mechanical	22
10	Setting Addresses	Mechanical	28
11	Install Options (if applicable)	Mechanical	29

Tools & Materials Required

Tools Required

- Drill and Drill Bits (Cobalt is best for stainless steel) - bit sizes: 1/8” & 1/4”
- Hole Cutter or Punch for Stainless Steel with cutter sizes: 1-1/2” & 1-1/8”
- Adjustable Pliers and Adjustable Wrench
- Screwdrivers - Straight & Phillips, Large and Small
- Wire Cutter and Wire Stripper
- Measuring Tape and Level
- Step Ladder

Materials Required

- Suitable fasteners for mounting the System Controller and Variable Frequency Drive (VFD)
  - hollow cinder block (3/16” toggle bolts)
  - concrete or filled cinder block (lead anchors 1/2” dia. with 1/4” x 1-14” lag screws)
  - drywall (3/16” toggle bolts)
  - plywood (#8 X 1-1/4” wood screws)
  - metal back-plate (#8 X 1-1/4” sheet metal screws)
- Conduit and wire for wiring the System Controller and VFDs

Note: All high voltage wiring to be completed by trained service personnel. (Local code may require a licensed electrician.)

Intelli-Hood®

STEP 1

Install System Controller

A

Select System Controller Location

For new construction, the hood manufacturer typically provides a utility cabinet in which to mount the System Controller. If the hood has a utility cabinet with extra space, mount the System Controller (and VFDs) there.

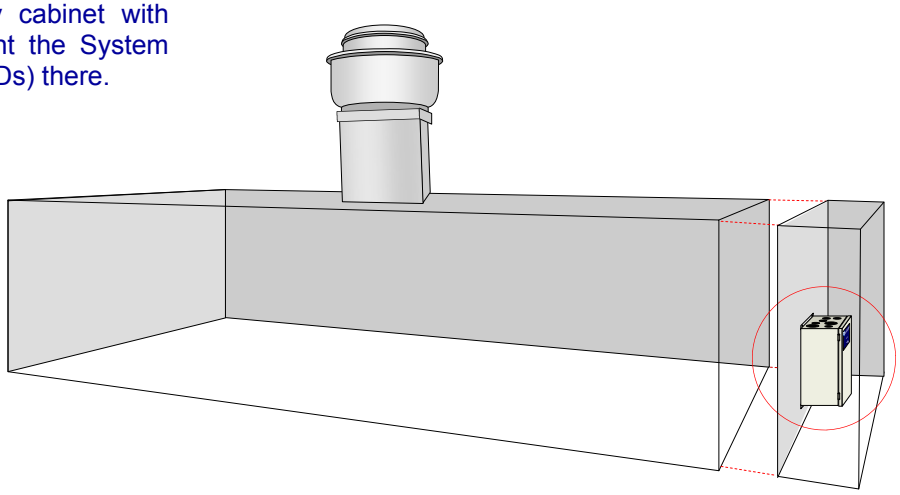

For retrofits, the System Controller is typically mounted above the hood. Select a location that is easily accessible and close to where the Touchpad will be mounted. Ideally, you should secure it to a wall. DO NOT PENETRATE THE HOOD EXHAUST PLENUM.

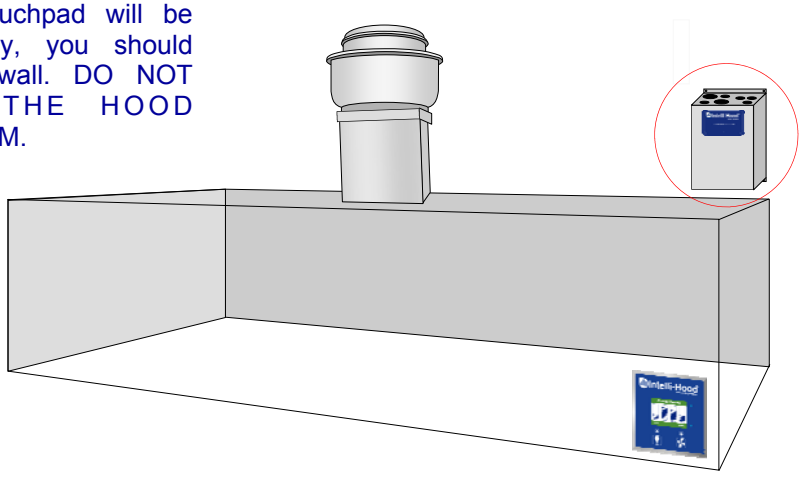

Intelli-Hood®

STEP 1

Install System Controller

B Turn Off Power Switch

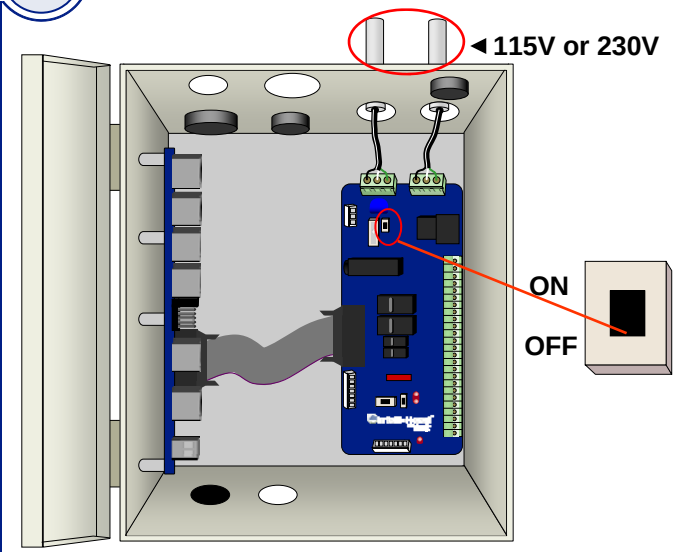

Turn OFF the System Controller power switch before wiring. Also turn off the breaker feeding this circuit.

C Wire System Controller

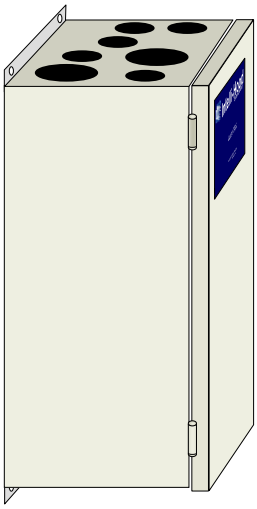

For both New Construction & Retrofits, wire the System Controller using the hood light circuit. The circuit must be 115V to 230V, at 50-60Hz. Maximum input current is 17A.

D Wire Connections Inside System Controller

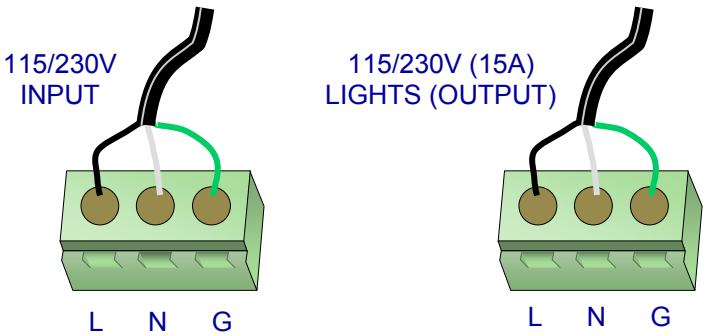

Wire gauge per NEC; allowable size range is 16AWG to 12AWG.

New Construction & Retrofits:
Main Input Power
from Hood Light Circuit
115-230 VAC @ 50/60Hz; 17A Max

New Construction:
Outgoing Power to Hood Lights
Output Voltage Matches Input
15 Amps max

Retrofits:
It is not required to use these output terminals if there are other provisions in place to control the hood lights. Note that output voltage will be the same as the input voltage.

Tungston Output Rating:
8A @ 120V
5.4A @ 240V

STEP 2

Install Variable Frequency Drive

A

Verify Variable Frequency Drive Wiring

For new construction, the Intelli-Hood includes a Variable Frequency Drive or VFD for each kitchen exhaust and make-up air fan. This type of starter is for use with 3-phase motors only. It not only turns the fans on and off, but also varies the speed of the motors by varying the output frequency and voltage. Therefore, you do not need a conventional magnetic motor starter with our system. **Caution:** If you have a tempered make-up air unit, then the control circuit for the heating system must be fed by a separate power source and NOT from the VFD! The output of the VFD must be wired to the motor ONLY and NOT to a transformer or any part of a control circuit!

If there is a make-up air unit, then the VFD for this unit must be interlocked with the fire suppression micro-switch so that this fan turns off in the event of a fire. This is accomplished by connecting a low-voltage cable between designated terminals on the VFD (01 and 04 for Allen-Bradley) and the Normally Closed (NC) terminals on the micro-switch. **Caution:** With variable frequency drives, there must be a separate conduit run for the output of each VFD (inputs may be run together if desired). If this is not done, there is a strong probability of problems due to line interference and inaccurate motor control.

For retrofits, the only difference between new construction and retrofits is that on retrofits you will already have conventional magnetic motor starters installed. In most cases, it is recommended that you install the VFD on the output side of the existing starters. This will enable the cooks/chefs to use the existing hood fan (and light) switch and not have to change their habits. This will also allow you to keep the existing circuit intact between the magnetic starter for the make-up air unit and the fire suppression system micro-switch.

All wiring must comply with the National Electric Code (NEC and local code requirements.

Intelli-Hood®

STEP 2

Install Variable Frequency Drive

B Select VFD Location

For retrofits, each VFD is typically mounted on the output side of the existing motor starter, which is often located in an electrical room, above the hoods, or inside a utility cabinet. **For new construction,** the hood manufacturer typically provides a utility cabinet in which to mount the VFDs.

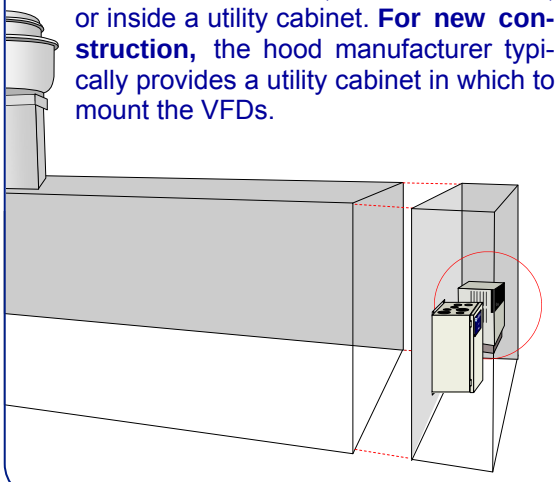

C Check VFD Location

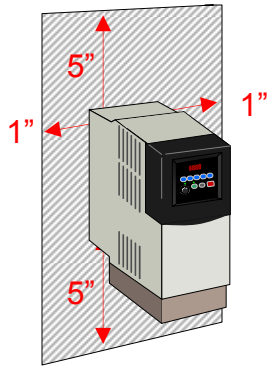

The location must be relatively free of dirt, grease, and water. The ambient temperature must be between +14 degrees F and +122 degrees F. There should be 5” of clearance on the top and bottom and 1” on the sides for adequate ventilation/cooling.

D Mount VFD

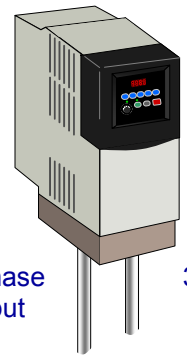

3-Phase Input

3-Phase Output

Mount each VFD with appropriate fasteners.

Then install separate conduit for the input and output power wiring to prevent electrical interference between the conductors.

E Wire VFD

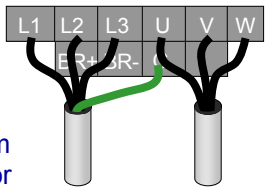

3-phase input from breaker or magnetic motor starter

3-phase output to fan motor

Remove the VFD top cover and connect the line voltage wiring to the VFD input power terminal block as shown above. Then connect the output power from the terminal block to the respective fan motor on the roof. The ground wire must be a minimum of 14 AWG and as short as possible. The output wiring for each VFD MUST be in a separate conduit run.

Intelli-Hood®

STEP 3

Install Touchpad

A Remove Existing Switches

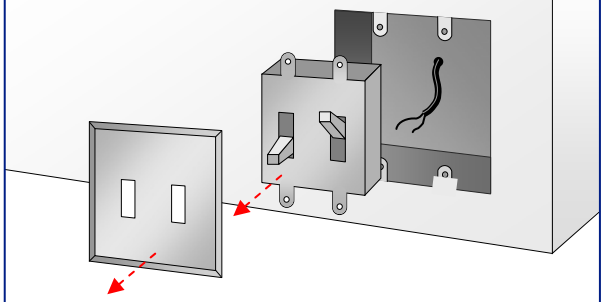

Before removing the switch cover plate, turn off the circuit breaker.

For retrofits, if you want to replace the existing fan and light switch with our Touchpad, remove these switches from the junction box. Then remove the existing wires to make room for the Touchpad Cable.

B Run Touchpad Cable

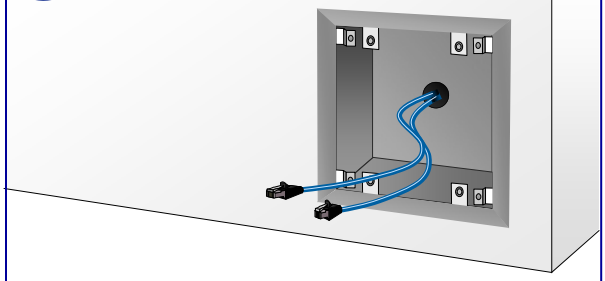

Run the Touchpad Cable inside the existing conduit and leave approximately 5 inches of slack inside the junction box. You will connect the other end of the Cable to the System Controller in Step 9.

C Plug In Cable

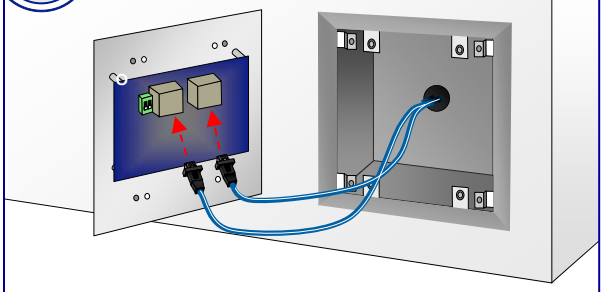

Plug the connector into the receptacle on the back of the Touchpad.

D Mount Touchpad

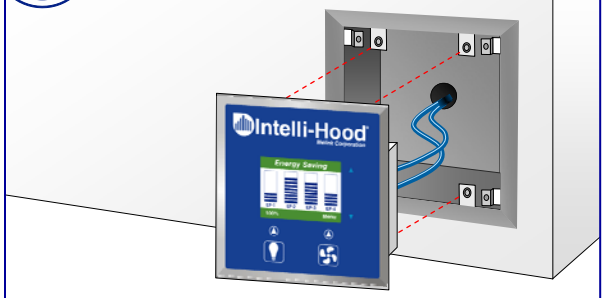

Mount the Touchpad to the junction box and secure the cover plate by snapping it on.

Intelli-Hood®

ALTERNATE 3

Install Touchpad

A Install Surface Mount Box

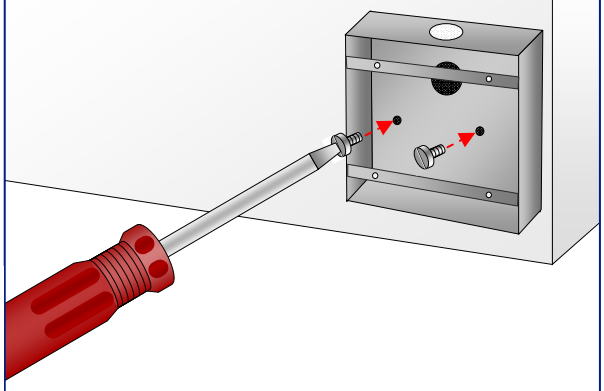

Install the Surface Mount box by attaching screws through the holes provided inside the box. If possible to bring cable in through the wall behind the box, first drill a 1” hole in the wall. If not, install 3/4” conduit stubbed up above the ceiling for the cable run.

B Run Touchpad Cable

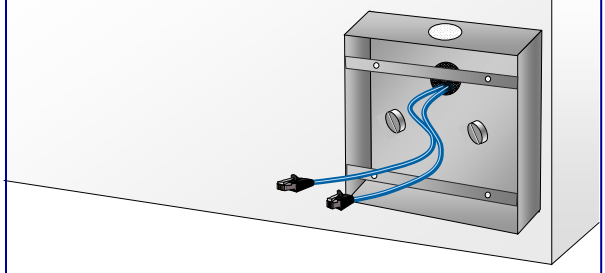

Run the Touchpad Cable inside the 3/4” conduit or through the back of the box and leave approximately 5 inches of slack inside the junction box. You will connect the other end of the Cable to the System Controller in Step 9. If another device will be installed downstream of the Touchpad, run two cables.

C Plug In Cables

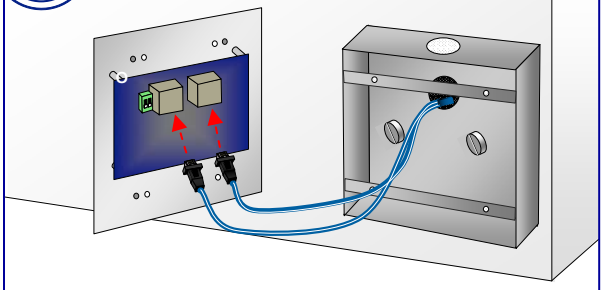

Plug the connector(s) into the receptacle on the back of the Touchpad.

D Mount Touchpad

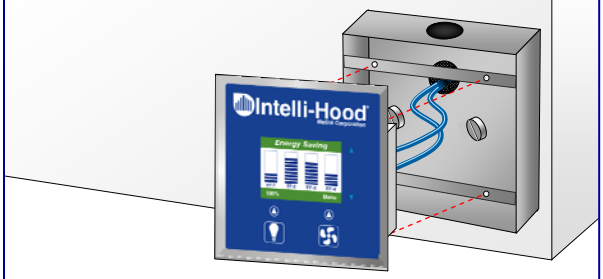

Mount the Touchpad to the junction box and secure the cover plate by snapping it on.

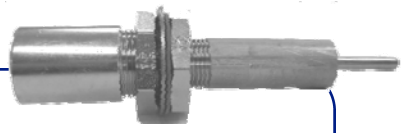

STEP 4

Install Exhaust Temperature Sensor

A Determine Number of Sensors

Install one (1) Temperature Sensor per exhaust duct, if the length of the duct is less than 24". In most cases this will mean one Temperature Sensor per hood.

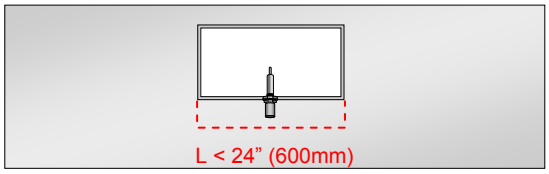

Hood 1 (Top View)

In some cases, this will mean two Temperature Sensors per hood.

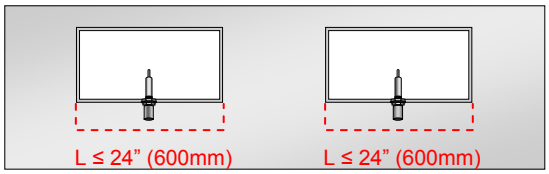

Hood 2 (Top View)

If the length of the duct is more than 24", then install two Temperature Sensors in order to obtain a better average reading.

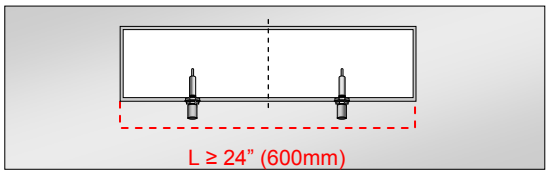

Hood 3 (Top View)

B Select Location for Mounting Sensor

Select a location for mounting each Temperature Sensor. The tip of the sensor should be inside the center of the duct to sense the average temperature. For most installations, proceed with steps C-F on page 10. An alternate mounting procedure is described in steps C-J on pages 11 and 12.

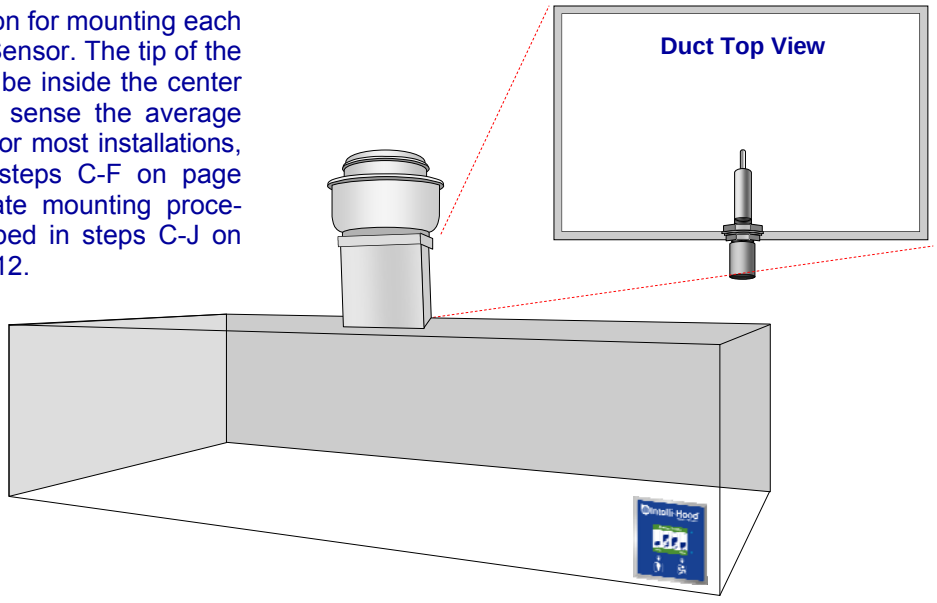

Intelli-Hood®

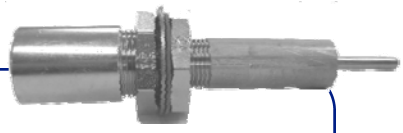

STEP 4

Install Exhaust Temperature Sensor

C Select Location on Duct

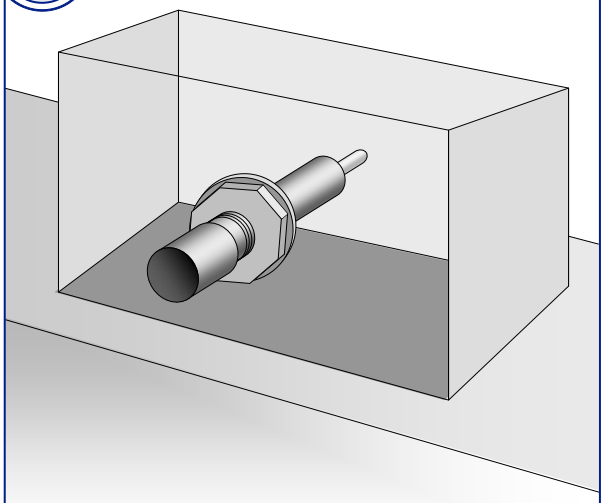

Each Temperature Sensor should be located as closely to the top of the hood as possible for easy access and cleaning.

D Side View of Sensor

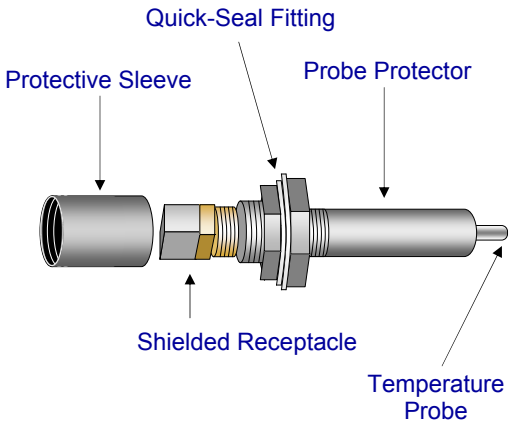

E Drill Hole in Duct

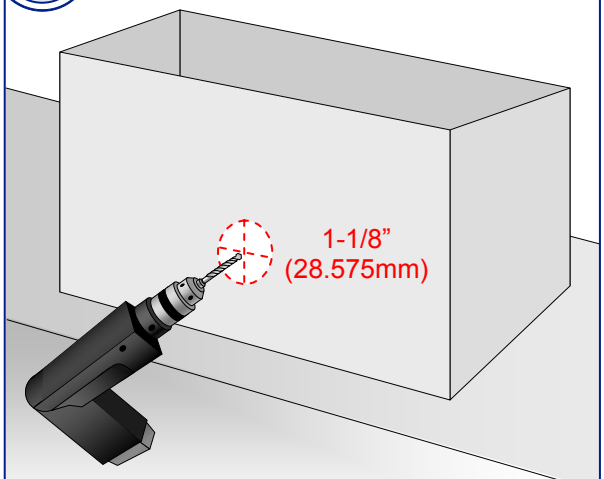

Drill or punch a 1-1/8” (28.575mm) diameter hole at the proper location for each Temperature Sensor.

F Mount Sensor

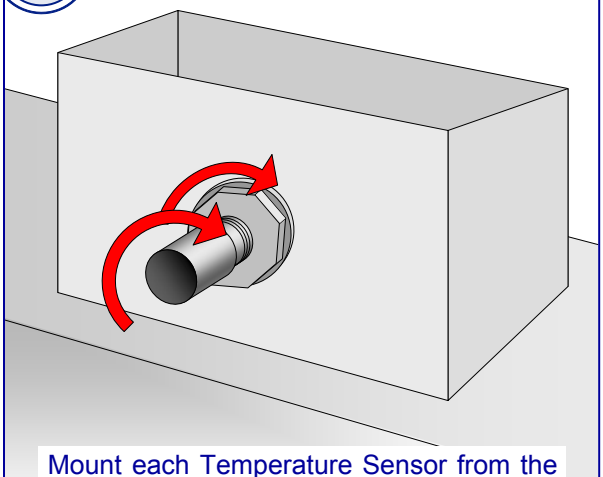

Mount each Temperature Sensor from the inside of the duct. Insert the lock washer and tighten the nut from the outside of the duct, then re-attach protective sleeve and strain relief.

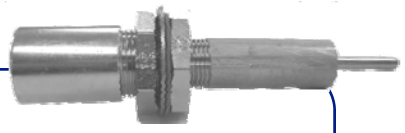

ALTERNATE

4 Install Exhaust Temperature Sensor

A Insert Studs

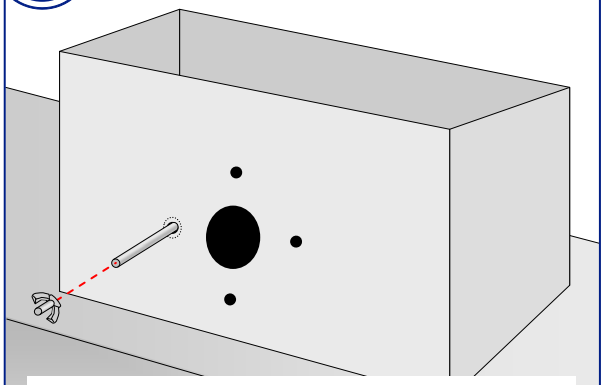

By reaching into the 2-1/4” hole, insert the stud into the 3/16” hole from inside the duct so that the threaded end is protruding outward. Tighten the wing nut onto the stud until its self-clenching base is securely wedged into the hole. Repeat this step for the other studs.

B Tighten Studs

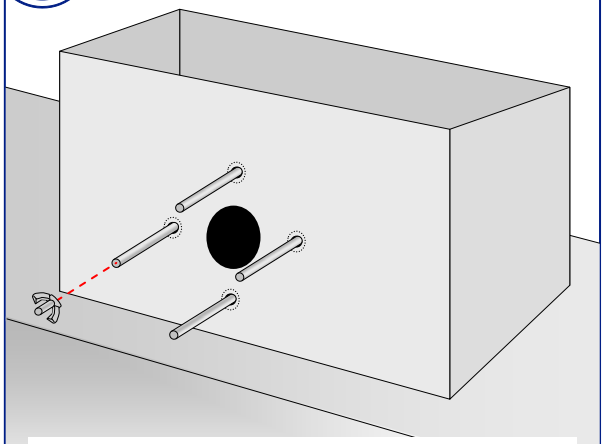

Remove wing nut from each stud. Check to be sure that all the studs are securely wedged into each hold. If any feel loose, re-tighten the wing nut onto the stud using a wrench. Remove all remaining wing nuts.

C Mount Sensor

Place the gasket over the studs, followed by the flange fitting. Tighten with the (4) wing nuts using an adjustable wrench until the unit is secure. Check around the seal to make sure the flange is sitting flush to the duct with no gaps.

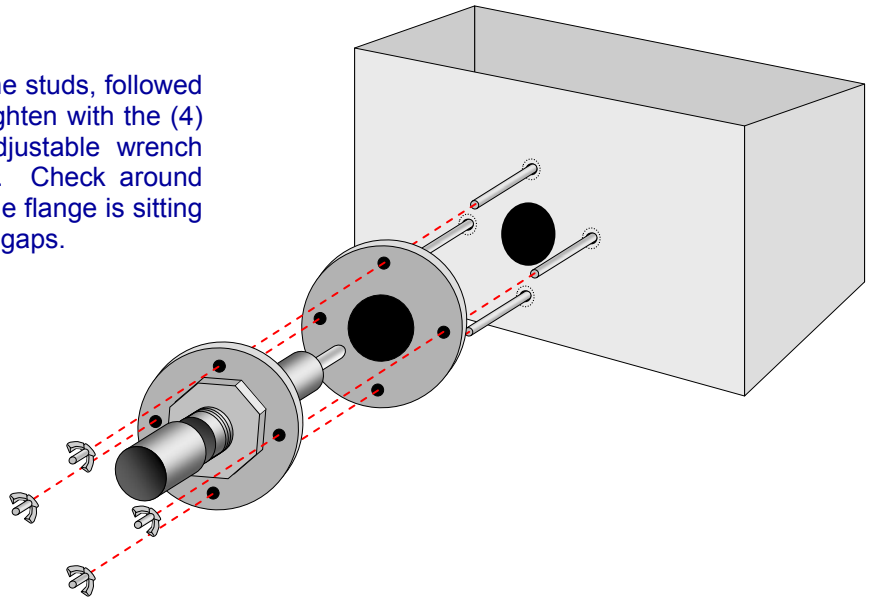

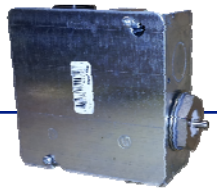

STEP 5

Install Canopy Sensor

A Determine Number of Sensors

Install one (1) Temperature Sensor per hood, if the length of the hood is less than 15'. In most cases this will mean one Temperature Sensor per hood.

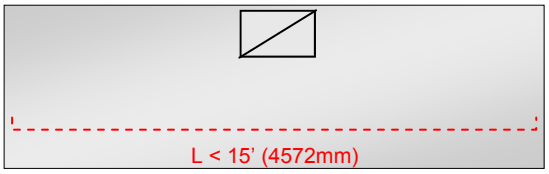

Hood 1 (Top View)

In some cases, this will mean two Temperature Sensors per hood.

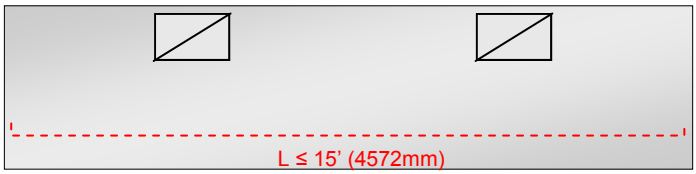

Hood 2 (Top View)

B Select Location for Mounting Sensor

Select a location for mounting each Temperature Sensor. For hoods <15', the sensor should be close to the center of the canopy. Be careful to avoid installing the sensor next to incandescent light bulbs as they can adversely affect accuracy of the sensor. Proceed with steps C-F on page 14.

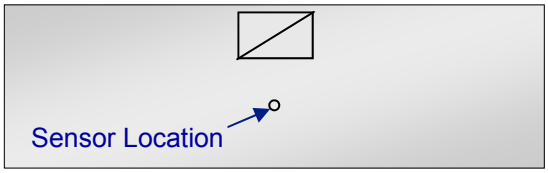

STEP 5

Install Canopy Sensor

C Select Location on Roof of Hood

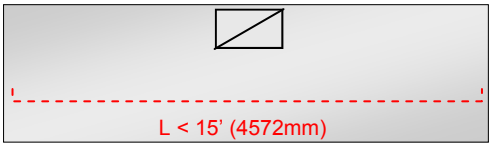

Hood 1 (Top View)

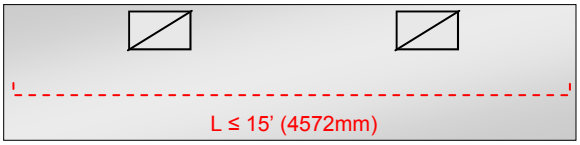

Hood 2 (Top View)

D Side View of Sensor

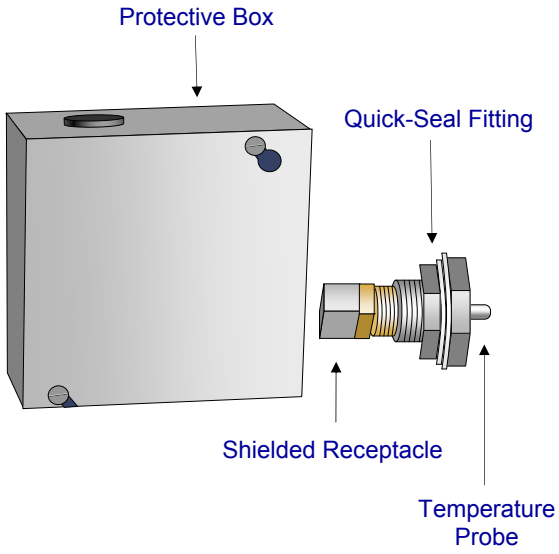

E Drill Hole in Roof of Hood

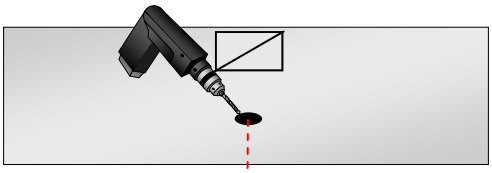

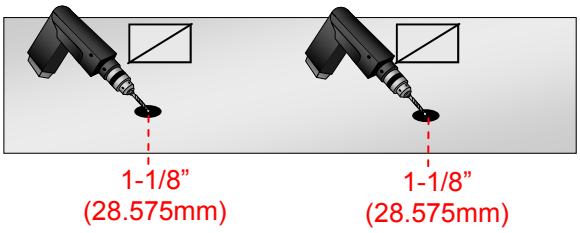

F Mount Sensor

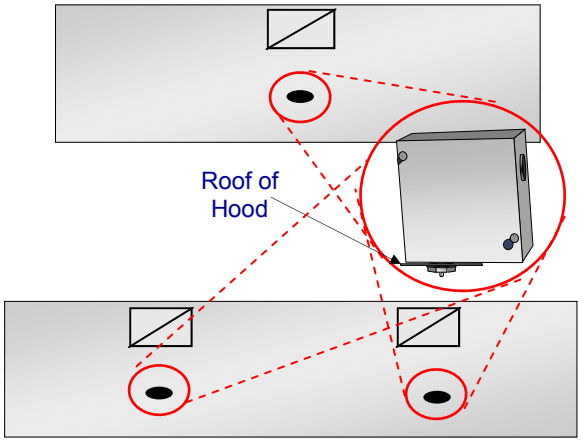

Intelli-Hood®

STEP 6

Install Hood Controllers

A Select Hood Controller Location

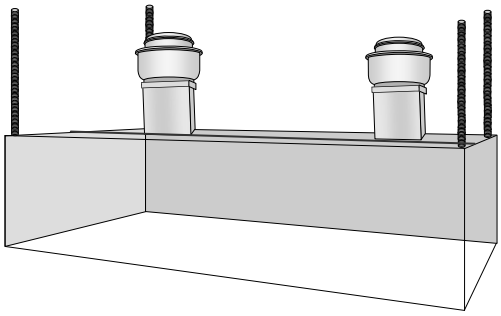

Select a location from the following four options for mounting each Hood Controller. The best way will vary based on conditions at each hood.

B Option 1: Secure Hood Controller to Standing Seam

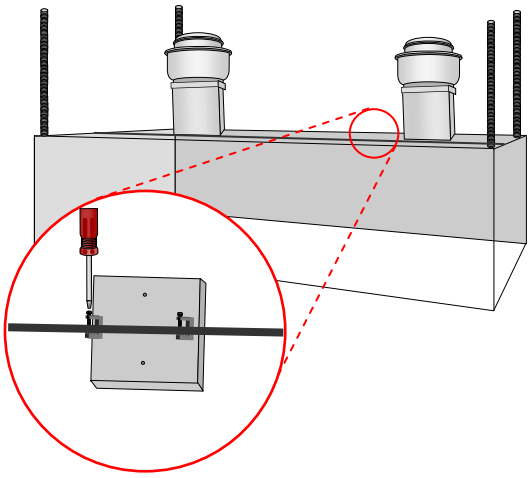

C Option 2: Secure Hood Controller to All-Thread

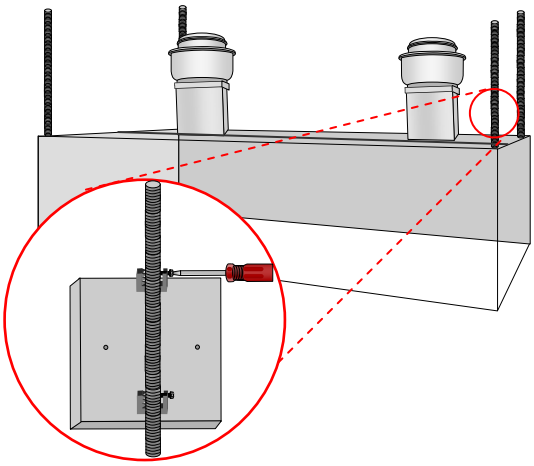

D Option 3: Secure Hood Controller By Bolting to Wall (Remove Clamps)

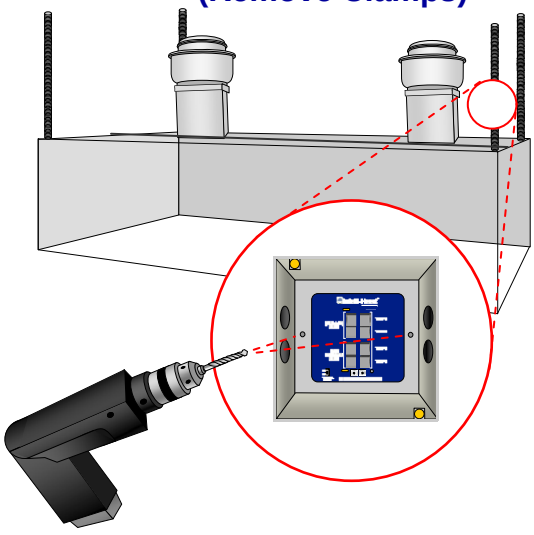

STEP 6

Install Hood Controllers

E Option 4: Secure Hood Controller with Pass-Thru Nipple to APU

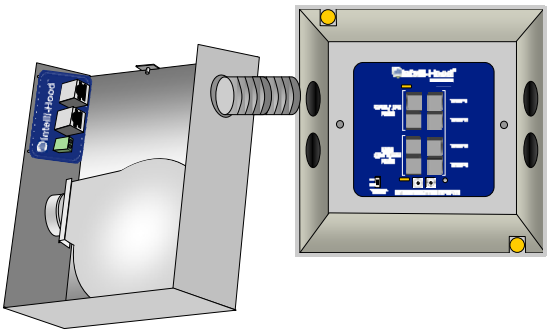

F Re-Attach Lid of Hood Controller

G Re-Attach Lid of Hood Controller

STEP 7

Install Optic Sensors

A Check Hood

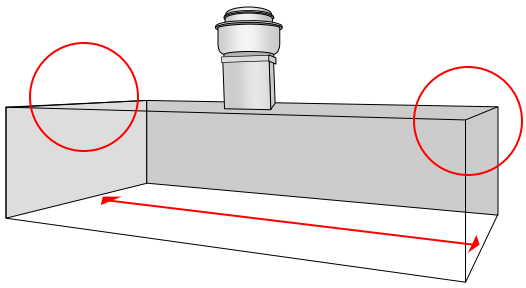

Make sure there are no obstructions at least 10” (254mm) from where you need to penetrate the top of the hood. Also, make sure the location will not cause the Optic Sensor beam to be obstructed by anything, such as fire suppression piping.

B Select Sensor Locations

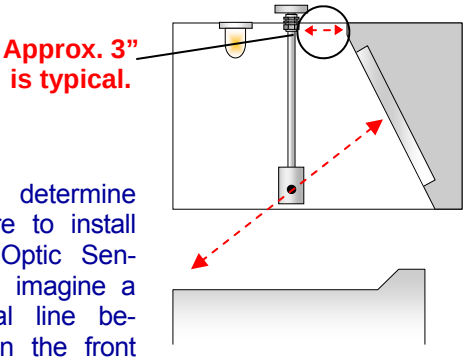

To determine where to install the Optic Sensors, imagine a virtual line between the front of the cooking surface and the middle of the hood filters. The Optic Sensors should be mounted along that virtual line inside the ends of the hood. (This is typically about 3” from where the fitter bank meets the top of the hood.) Also, the Optic Sensors must be mounted directly across from each other.

C Mark Hole Locations

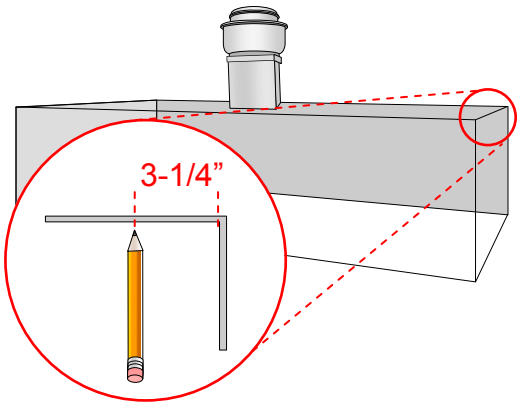

The hole locations need to be centered 3-1/4” (83 mm) from the **inside** ends of the hood. Drill a small pilot hole to mark these exact locations.

D Drill Holes in Hood

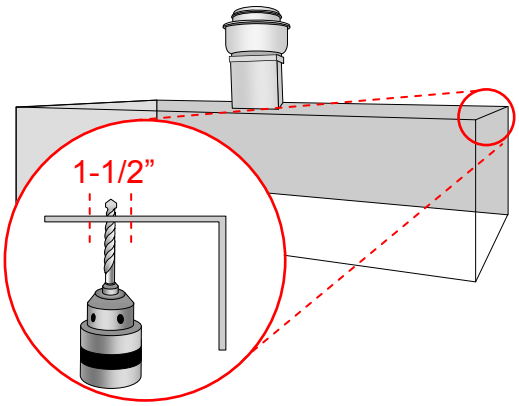

Then drill or punch a 1-1/2” (38mm) hole at these same locations.

STEP 7

Install Optic Sensors

E

Install Fittings

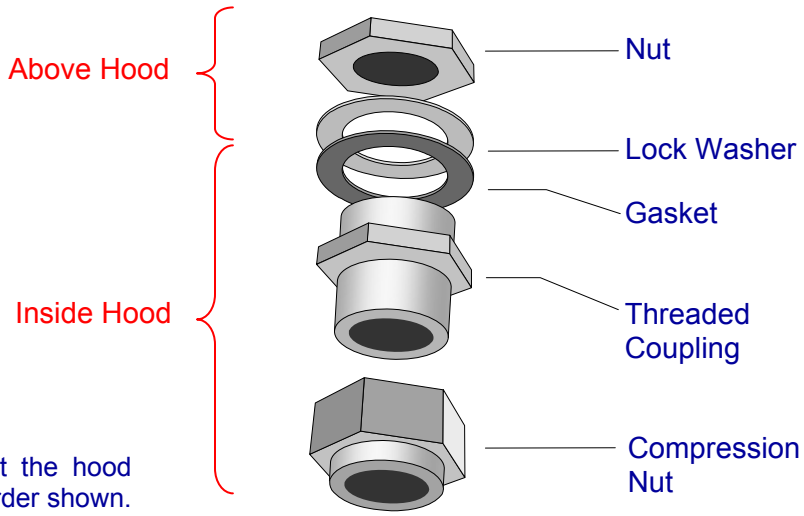

Install the Fittings at the hood penetrations in the order shown. Provided UL Listed fittings must be used.

F

Install Purge Pipes

Insert the Purge Pipes inside the Fittings with the notch positioned above the hood. Tighten the Fitting temporarily, until the Optic Sensors are mounted.

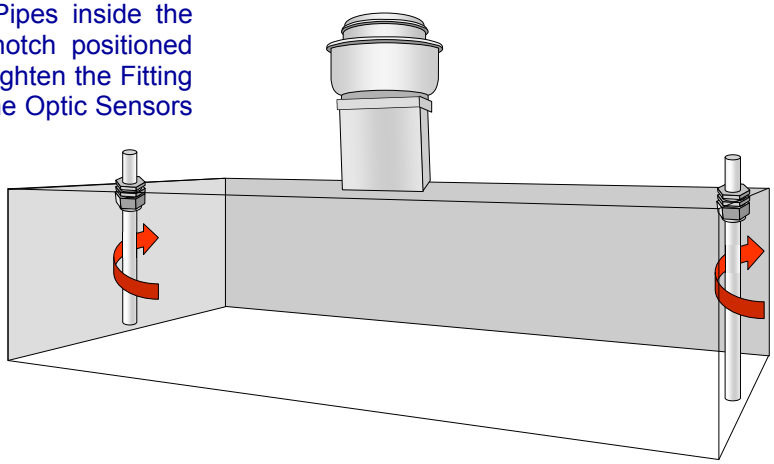

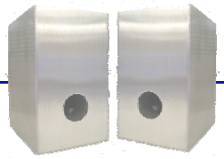

STEP 7

Install Optic Sensors (Optic Enclosures)

G Disengage Optic Sensors

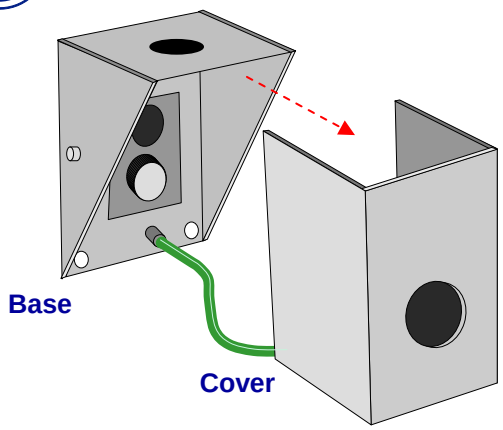

Disengage the cover from the base on each Optic Sensor. One has a circuit board labeled 'Emitter', and the other is labeled 'Receiver'.

H Mark Hole Locations

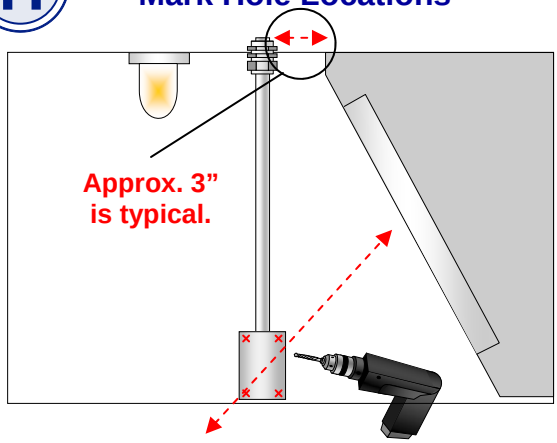

Use the base of each Optic Sensor as a template to mark the location for two mounting holes. Be sure to locate the Optic Sensor in the virtual line mentioned in step 5-B. Drill 3/16" holes.

J Mount Optic Sensor Base

Mount the base with two stainless steel screws. The screws can be located inside or outside of the hood, depending upon the location of the hood. If the hood is located against a wall, then self-tapping screws from the inside must be used. If the hood is not located against a wall, then use the machine screws, washers and nuts provided.

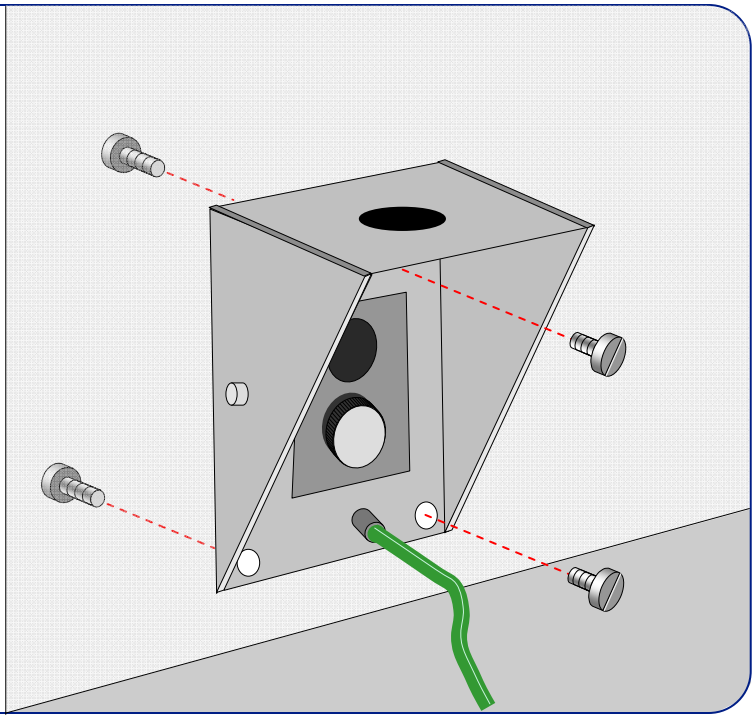

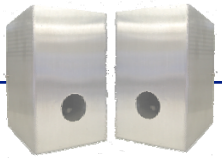

STEP 7

Install Optic Sensors

K

Install Optic Cables

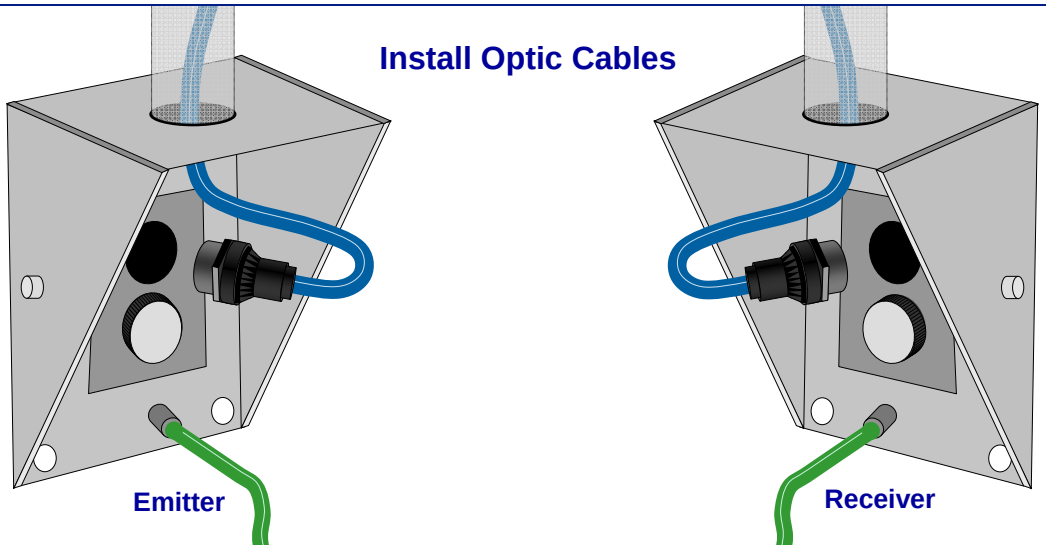

Remove the Optic Cables from the box. Insert the end of one cable with the small anti-snag boot up through the purge pipe from the optic housing with the Emitter Board. Plug in the cable end with the round connector and push any excess slack up the purge pipe. Mount the cover onto the base. Repeat with Receiver Board.

L

Run Cable Up Purge Pipes

Run the cables up each Purge Pipe and verify that they are located inside the notches before installing the APUs.

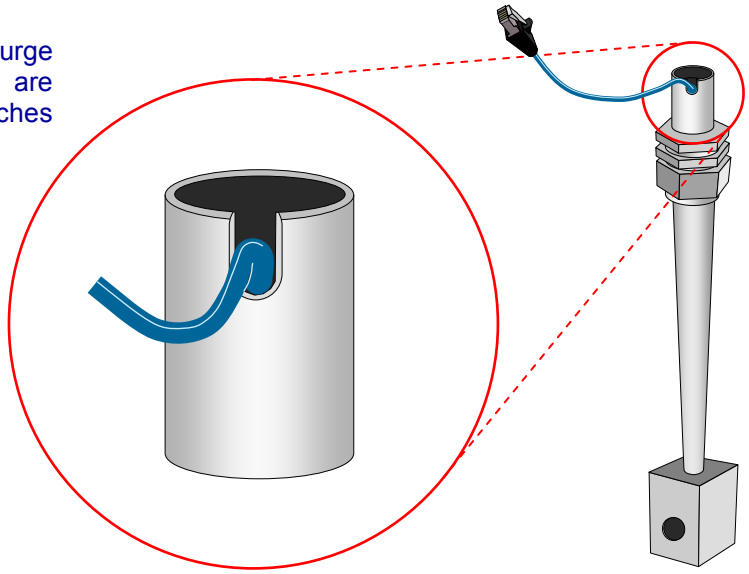

STEP 8

Install Air Purge Units

A Attach APU to Purge Pipe

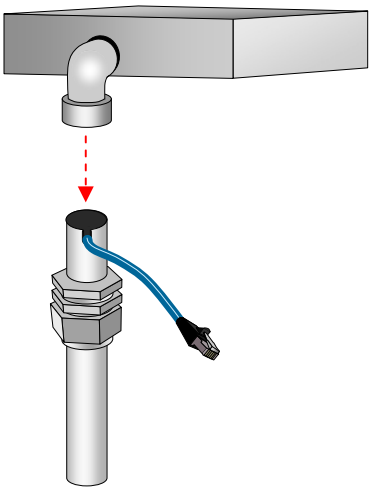

Attach an APU to each Purge Pipe and tighten the compression fitting.

B Remove APU lids

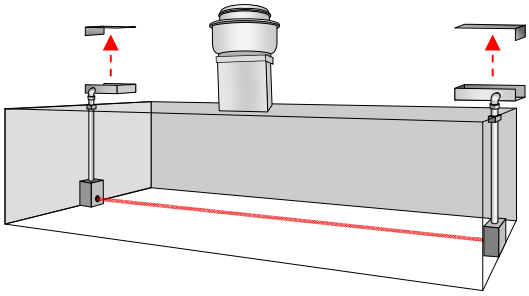

Remove the lids from each APU box to prepare for step 7.

C Plug In Optic Cables

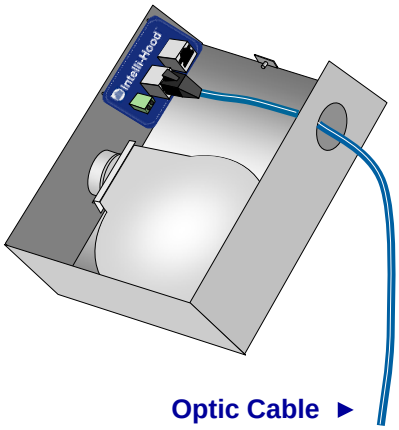

Plug the Optic Cables into either receptacle on the header board inside each APU.

STEP 9

Install Cables (Variable Frequency Drive)

A Plug Cable Into VFD

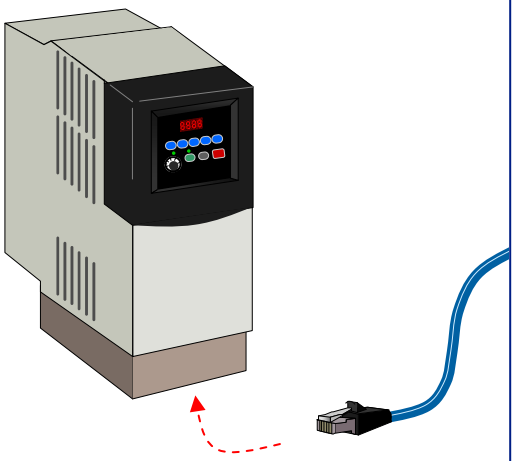

Remove a cable from its package and plug one end into the receptacle on the bottom of one VFD.

B Plug Into System Controller

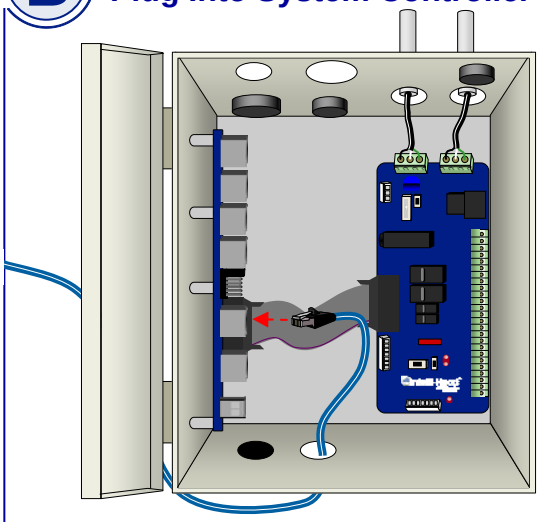

Then plug the other end of the cable into the receptacle marked 'VFD' on the side of the System Controller.

C Connect VFDs

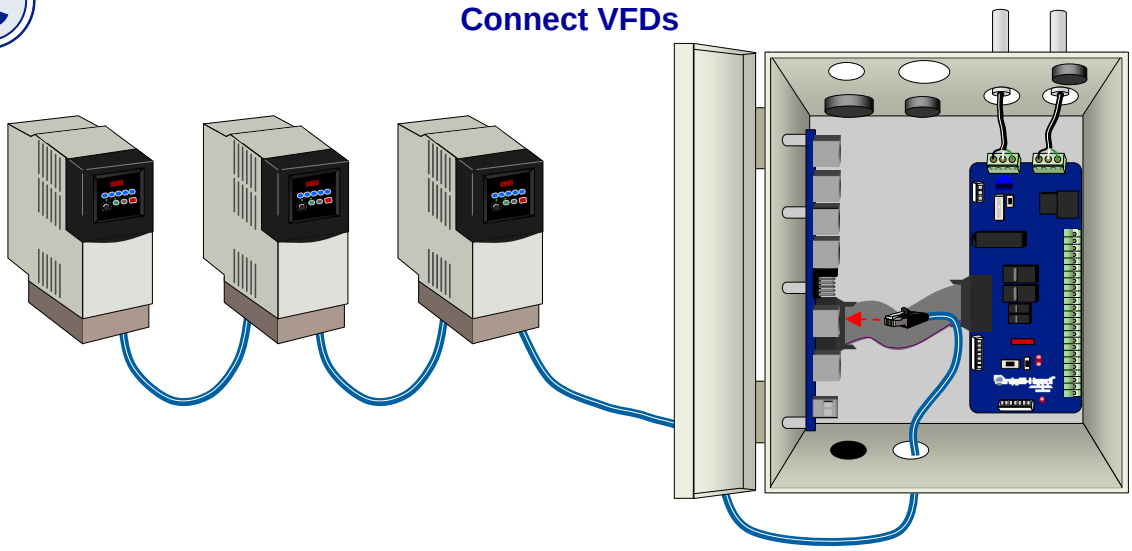

If you have multiple VFDs, plug the remaining VFDs to one another with additional cables, keeping only one VFD plugged to the System Controller.

STEP 9

Install Cables (Touchpad)

D Find Touchpad Cable

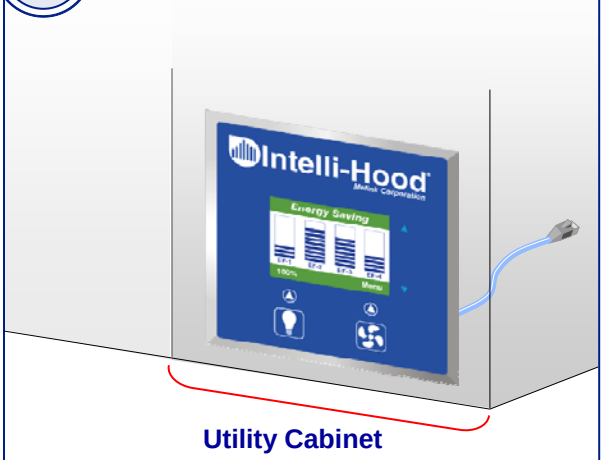

Inside the Utility Cabinet, take the Touchpad Cable already connected on one end ...

E Plug Into System Controller

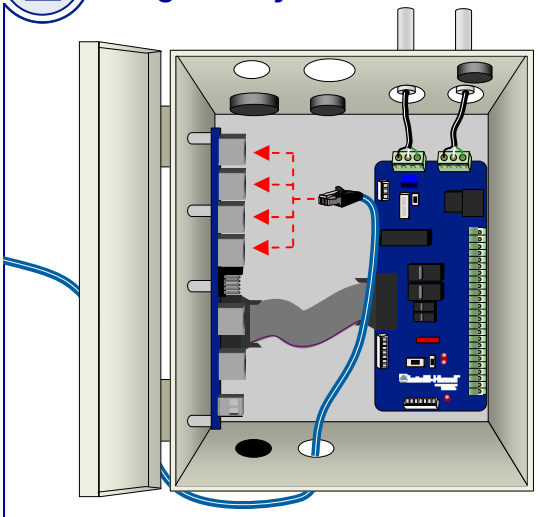

...and run it to the System Controller on the other side of the cabinet.

F Plug Touchpad Cable into Hood Controller

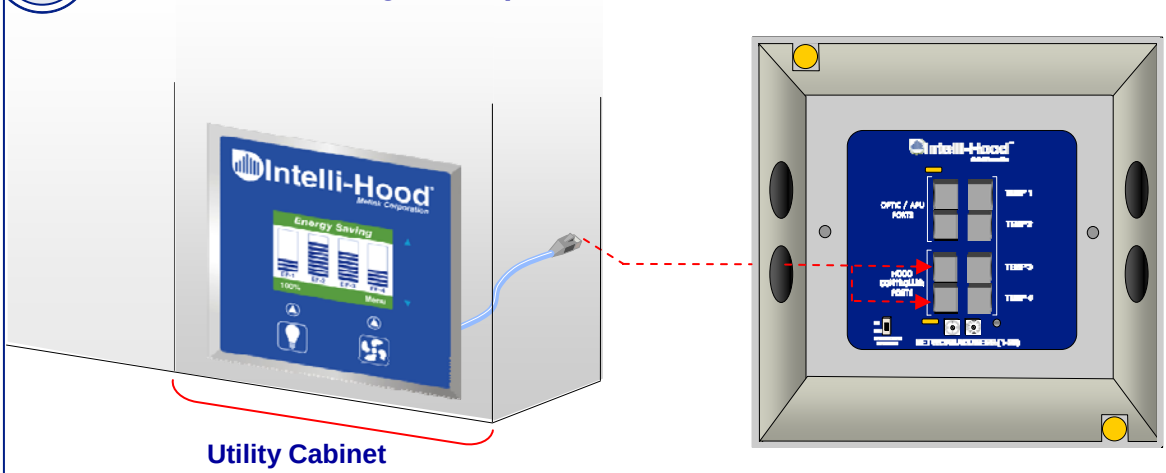

STEP 9

Install Cables (Temperature Sensor)

G

Plug Cable into Temperature Sensor

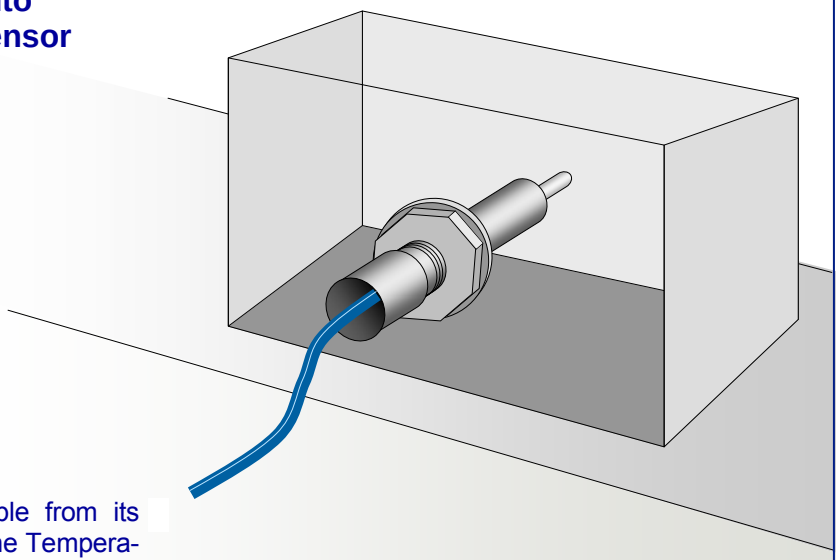

Remove the Temperature Cable from its package. Connect one end to the Temperature Sensor receptacle.

H

Plug Into Hood Controller

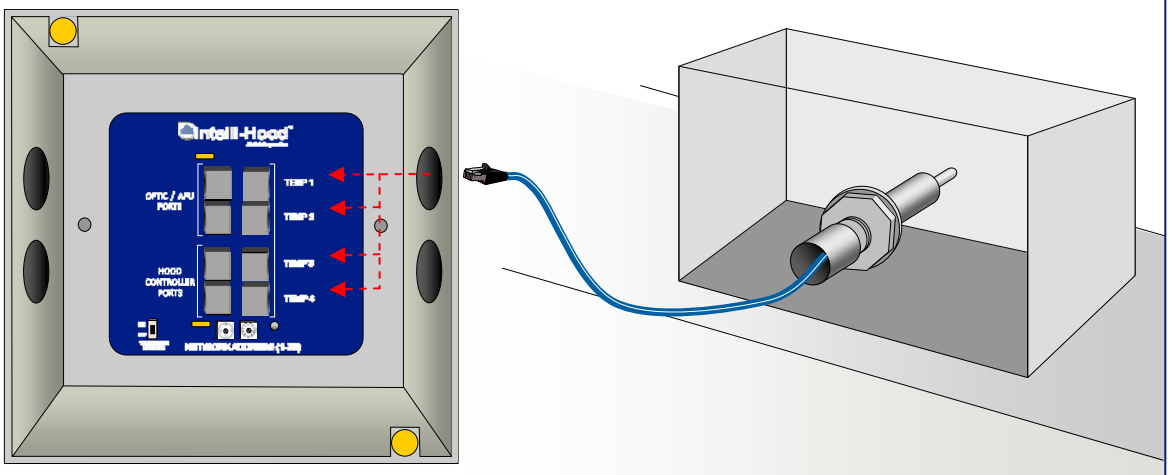

Connect the other end of the cable into a Temp port on the Hood Controller. Make sure to note which port each sensor is plugged into as they will be assigned via programming.

STEP 9

Install Cables (Hood Controller)

J

Plug Into Hood Controller

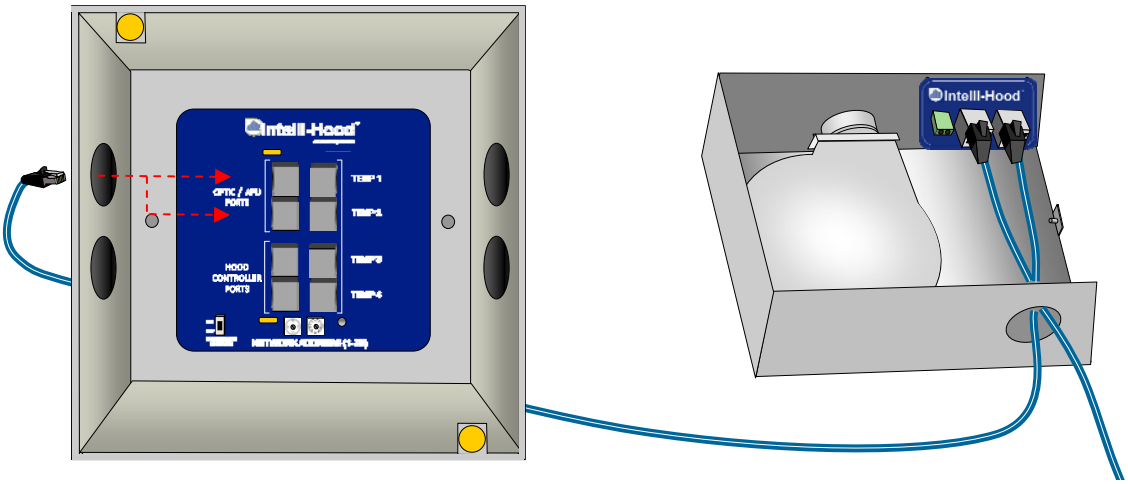

When optics are being used, plug a cable in between each APU box and the Optic /APU Ports on the Hood Controller...

K

Secure APU Lid

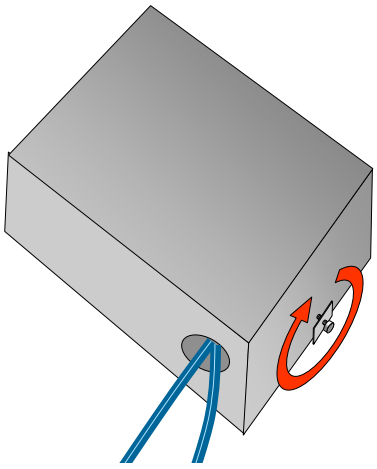

...then replace the lid on the APU and tighten the thumbscrew. Repeat steps A-D for remaining hoods.

L

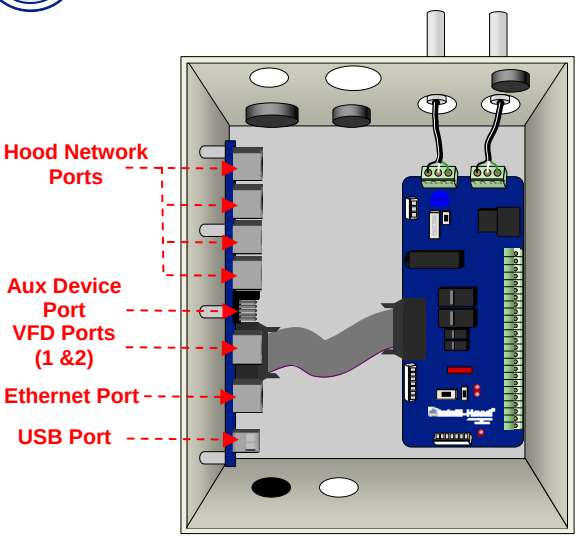

STEP 9

Install Cables (Hood Controller)

M

Possible Hood Layout

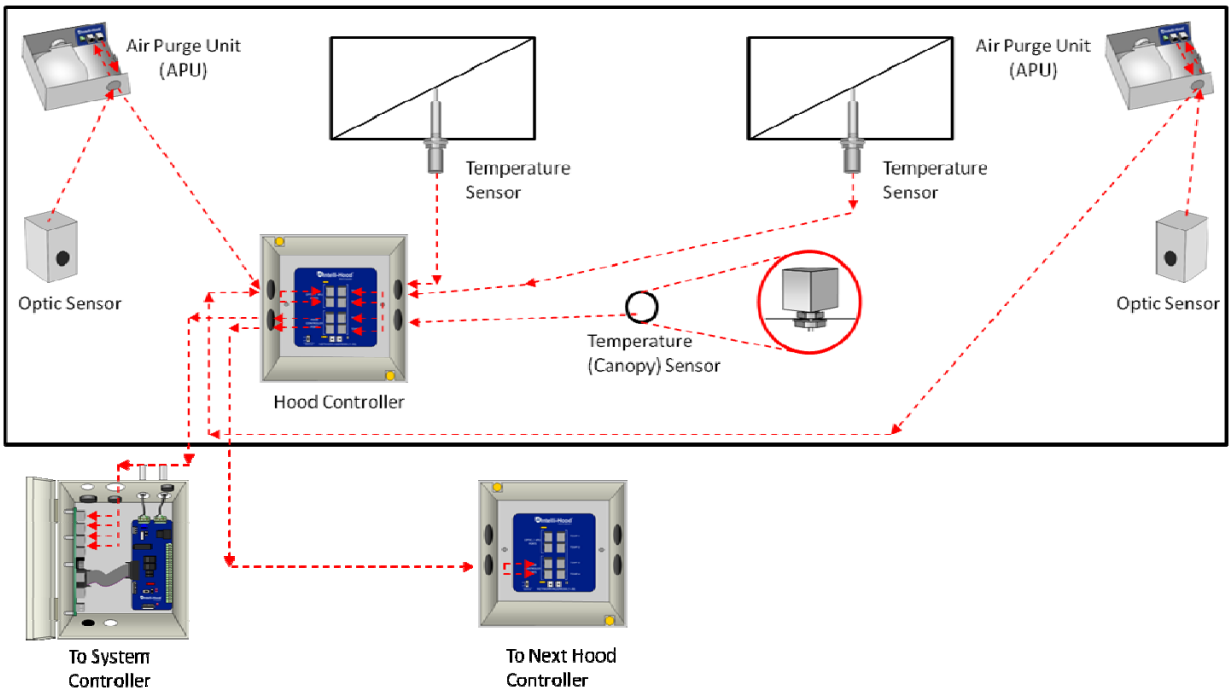

For each Hood Controller, the following sensors may be connected:

- One set of Optic Sensors
- Four Temperature Sensors (Programmable options for each sensor include Exhaust Duct,

The Hood Network has different types of devices. Refer to the Submittal and Technical Overview Document for general information regarding each of these devices. A System Controller can have several devices of each type connected to it. The possible quantities of each device are listed below. The columns labeled UA refer to unassisted capacity (i.e. without additional power sources).

Device	Max Capacity of SC (Standard)	Max Capacity of SC (Lite)	Max UA Single Port Capacity	Max UA SC Capacity
Hood Controller (HC)	39	4	4	10
Touchpad (TP)	10	4	3	10

STEP 9

Install Cables (Hood Controller)

N

Connect Hood Controllers

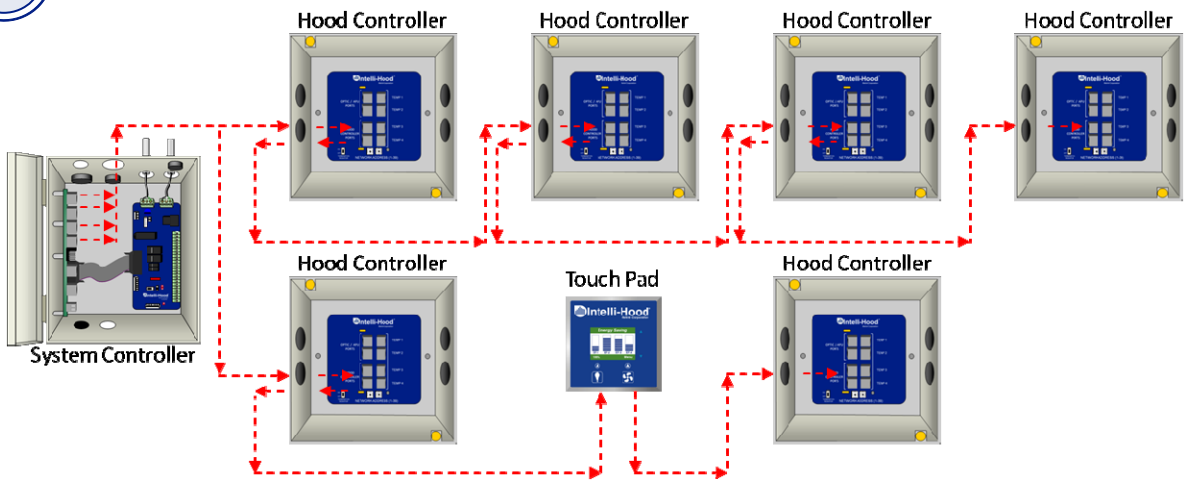

The System Controller has a limited amount of power output capacity with the included power supply. Up to (10) Hood Controllers with Optics may be connected across the four Hood Network ports before a auxiliary power is required. Also, each Hood Network Port is power/current-limited. Cable length must be taken into account when connecting the Hood Controller Network strings. The following table indicates the allowable load based on maximum cable distance to the respective Hood Network Port.

Max Number of Hood Controllers with Optics in Hood Network String	Allowable total cable distance from the System Controller to the last Hood Network device
1	450 feet
2	200 feet
3	150 feet
4	100 feet

Recommended Wiring Practices

- Order Hood Controllers so that the lowest Hood Controller addresses are connected to Hood Network Port 1, then Port 2, etc.
- The Touchpad should be the first device in the string from the System Controller.
- When possible, isolate the Touchpad on its own port (simplifies Troubleshooting).
- Last device in each Hood Network String should have the termination resistor switched to ON.
- All wiring is restricted to same room.

Intelli-Hood®

STEP 10

Setting Addresses

A Hood Controllers

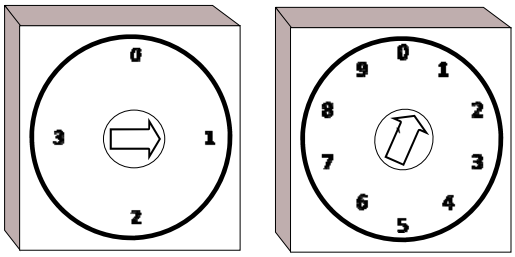

10s Position 1s Position

Set the Hood Controller address by setting the 10s and 1s address switches respectively. Each Hood Controller must have a unique address.

B Touchpad

Set the Touchpad address through the Configuration Menu. See Operations manual for details. Each Touchpad must have a unique address.

C Aux Touchpad, Aux Lighting Controller, Aux Power Supply

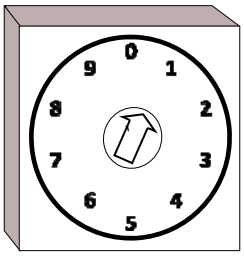

Set the address for the Aux Touchpad, Lighting Controller, and Power Supply by setting their respective rotary switches. Each device must have an address unique to its type. For example, an Aux Touchpad and Aux Lighting Controller can both be address 1, but two Aux Touchpads cannot be address 1.

D Termination Resistor

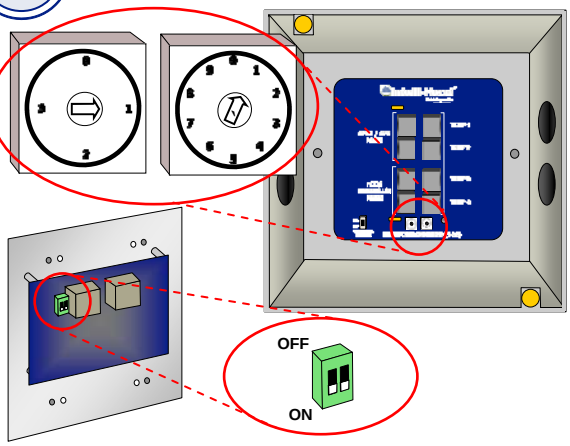

Set the Termination resistor to ON for the last device plugged into each Hood Network String. WARNING: DO NOT TURN ON ALL TERMINATION RESISTORS IN THE STRING OR THE COMMUNICATIONS WILL NOT WORK PROPERLY.

STEP 11

Field Wiring

A

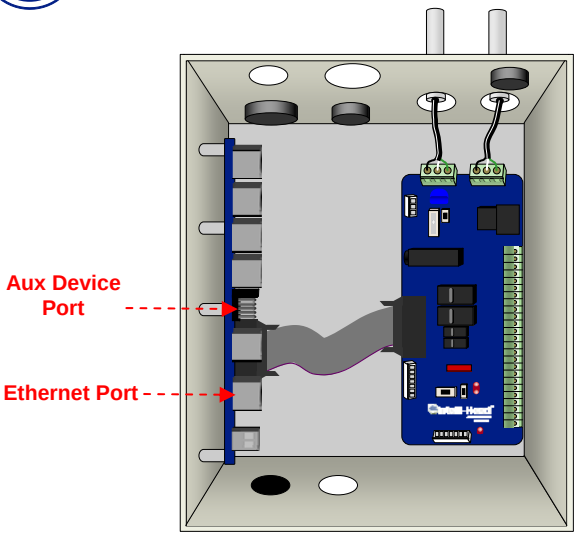

B

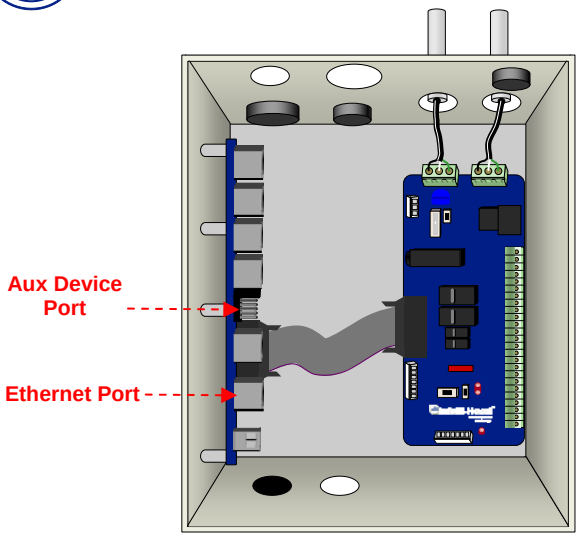

OPTION 1

Fire Suppression Switch

A

Connect Fire Suppression Switch to VFD

If you installed an Electronic Motor Starter for a make-up air or supply fan, then you will need to make sure it is interlocked with the fire suppression system. The purpose is to make sure that this fan shuts down in the event of a fire. This is accomplished by running the VFD on/off control signal to the fire suppression micro-switch. If/when this normally closed (N.C.) switch opens, the VFD shuts down power to the fan.

Connect your Ansul micro-switch to terminals 01 and 04 of the VFD.

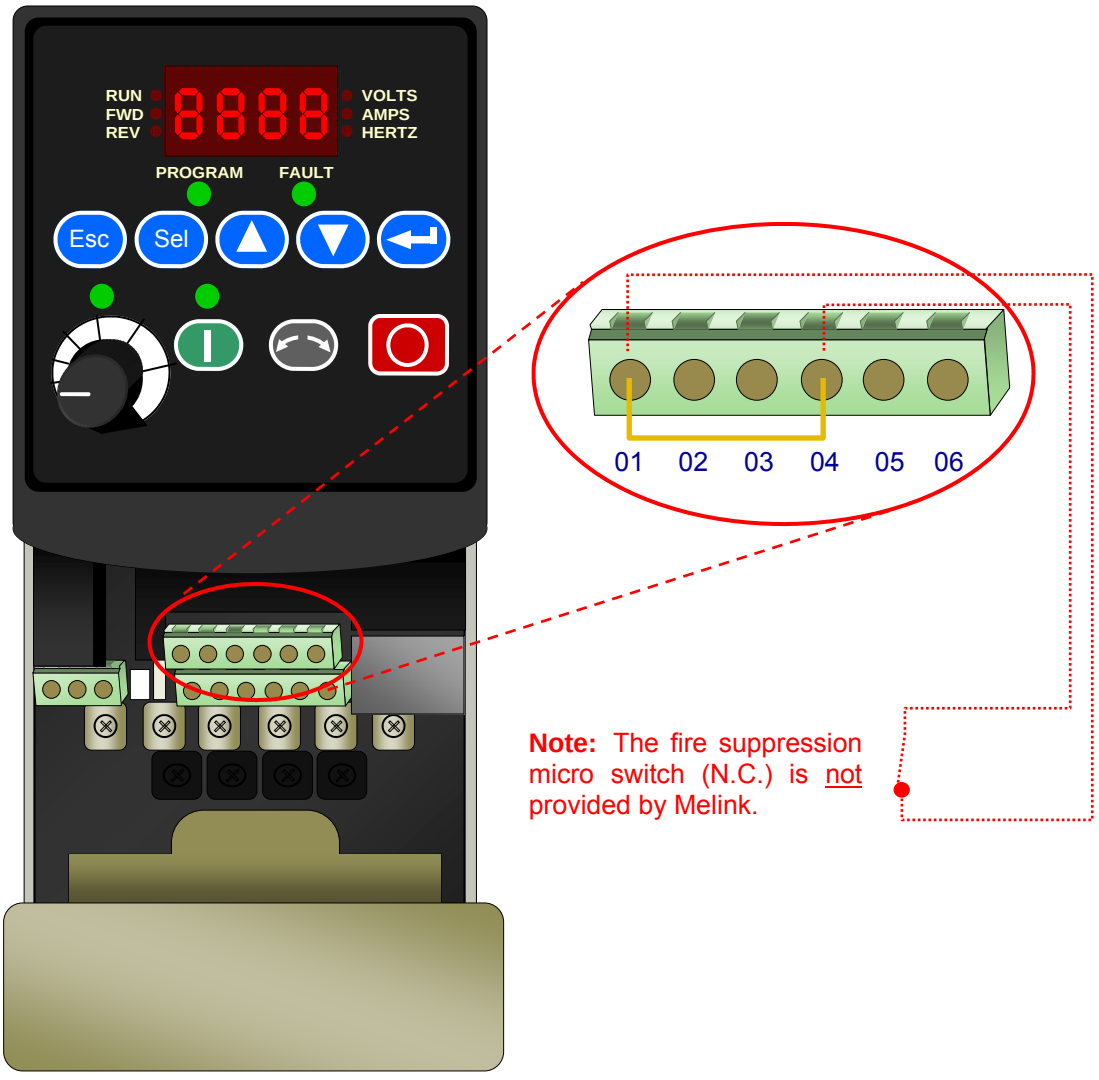

Note: The fire suppression micro switch (N.C.) is not provided by Melink.

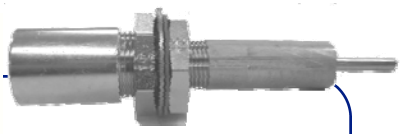

OPTION 2

Install Supply Temperature Sensor

A Install Temperature Sensor

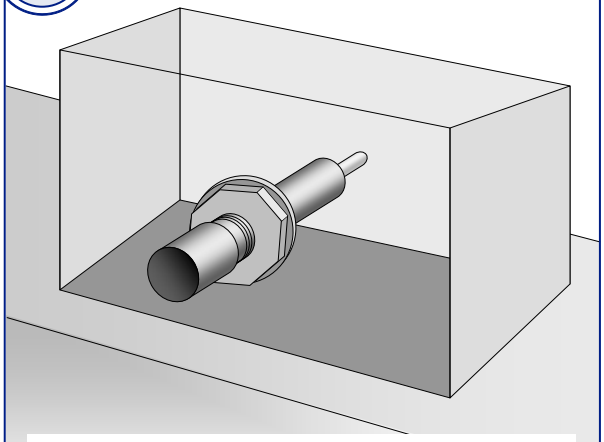

Install the Supply Temperature Sensor in the make-up air duct using one of the two mounting procedures shown in Step 4. **Note:** You only need to install one Supply Temperature Sensor in any given store.

B Plug Cable Into the Hood Controller

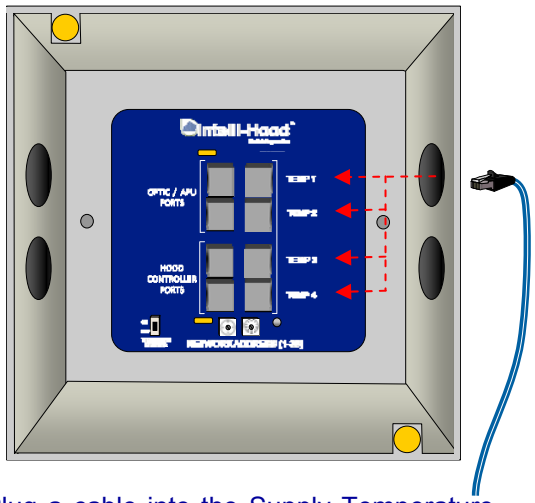

Plug a cable into the Supply Temperature receptacle of the Hood Controller.

C Plug Cable Into Temperature Sensor

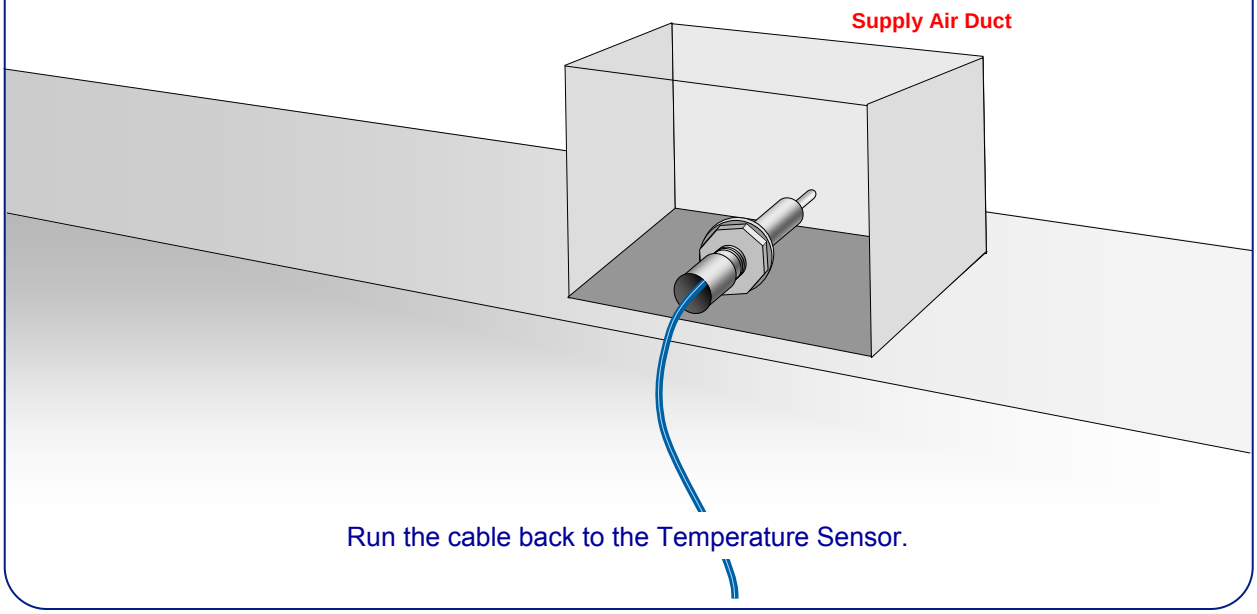

Run the cable back to the Temperature Sensor.

Intelli-Hood®

OPTION 3

Install Kitchen Temperature Sensor

A Select Suitable Location

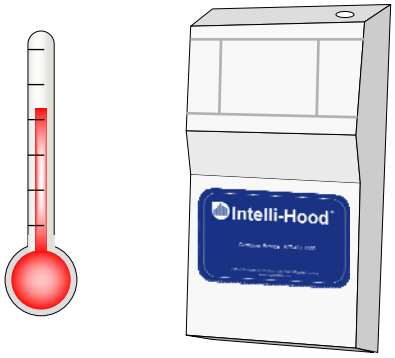

The Kitchen Temperature Sensor must be located away from any hot or cold spots. (such as above a kitchen appliance or underneath a ceiling diffuser). Choose a location that best represents the average temperature of the kitchen.

B Attach Base to Wall

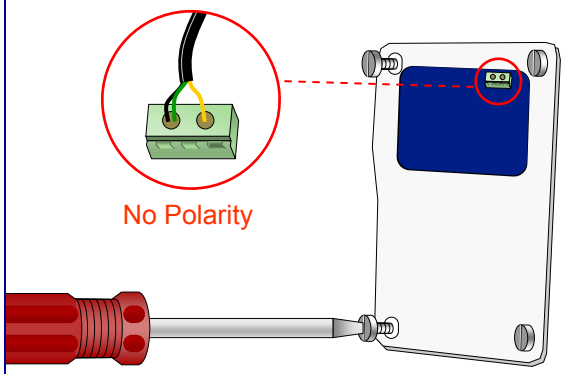

Detach the base from the cover and secure it to the selected location on the wall. Connect one end of the cable to the terminal block on the base.

C Connect Cable to Hood Controller

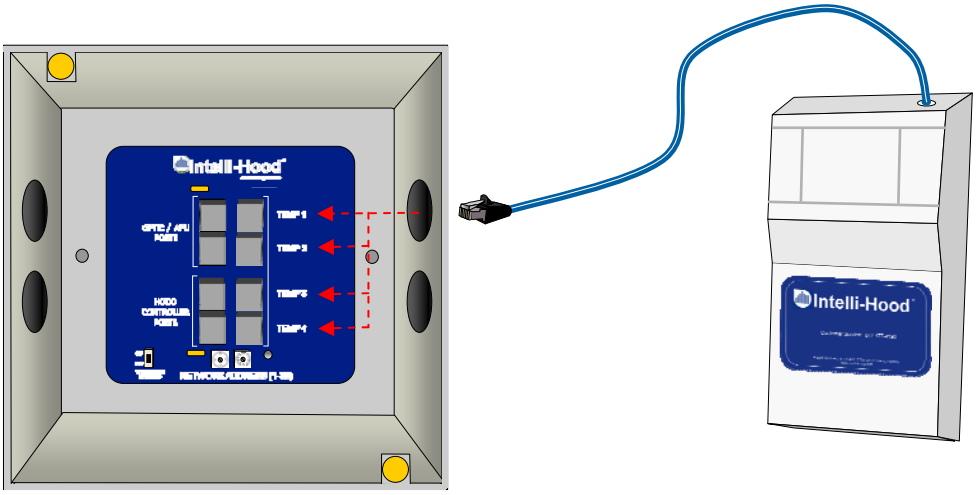

Connect the other end of the cable to terminals #23 and #24 inside the Hood Controller. (There is no polarity for this connection.)

Call Melink Customer Service at (513) 965-7300 if you have any questions.

Please let us know how we can improve our Installation Manual.
We want your experience with our product to exceed all expectations.

ECM [redacted]

Economic Summary

ECM [redacted]	
[redacted]	[redacted]
[redacted]	[redacted]
[redacted]	[redacted]
[redacted]	[redacted]
[redacted]	[redacted]
[redacted]	[redacted]
[redacted]	[redacted]
[redacted]	[redacted]

Existing Condition

[redacted]

[redacted]

Recommendation

[redacted]

[redacted] ECM [redacted]

- [redacted] GF [redacted] GM [redacted]
- [redacted] GF [redacted] GF [redacted]
- [redacted] GM [redacted] GM [redacted]

C E F K

G

[redacted]

[redacted]

[redacted]

M [redacted]

[redacted]

[redacted]

[redacted]

[redacted]

A [redacted] C M [redacted]

C [redacted]

F [redacted]

[redacted]

E [redacted] GF [redacted]

E [redacted] GF [redacted] GF

E [redacted] GM [redacted] GM [redacted]

E C [redacted]

Plumbing Fixtures	Flow Rate (gpf, gpm)	Fixture Quantity	Replacement Fixture Flow Rate (gfp, gpm)	Replacement Fixture Quantity
Toilets	1.6	10	1	10
Urinals	1	7	0.125	7
faucet	1.5	16	0.5	16

C [redacted]

[redacted] C[redacted] A[redacted]

[redacted]

[redacted] C[redacted]

[redacted] D[redacted] M[redacted]

[redacted] F[redacted] B[redacted] D[redacted]

[redacted] C[redacted]

[redacted] A[redacted]

[redacted] C[redacted]

[illegible]

TOTO®

UT105U(V)(G)

0.125GPF High-Efficiency Washout Urinal

FEATURES

- Compact urinal with concealed integral trap
- Washout flush action with 3/4" top or back spud inlet
- Complete with low profile dome strainer
- Optional CeFiONtect™ ceramic glaze - CeFiONtect glaze prevents debris and mold from sticking to ceramic surfaces, leading to fewer chemicals.

CeFiONtect

D+ Dual-Max

MODELS

- UT105U
  Urinal with 3/4" top spud inlet
- UT105UG
  Urinal with 3/4" top spud inlet and CeFiONtect
- UT105UV
  Urinal with 3/4" back spud inlet
- UT105UVG
  Urinal with 3/4" back spud inlet and CeFiONtect

ADDITIONAL ITEMS

- THU3017
  Stainless Steel Urinal Drain Cover

FLUSH VALVES EcoPower®	
TEU1UA12#CP	0.125GPF
TEU2UA11#SS	0.125GPF
TEU3UA11#SS	0.125GPF

COLORS/FINISHES

- #01 Cotton (CeFiONtect optional)

PRODUCT SPECIFICATION

The wall-mounted, ADA compliant, high-efficiency washout urinal shall be 0.125GPF/0.47LPF when paired with a 0.125GPF flushometer valve. Urinal shall have optional CeFiONtect ceramic glaze. Urinal specified shall be model UT105U___.

CODES/STANDARDS

- Meets and exceeds ASME A112.19.2/CSA B45.1,
- Certifications: IAPMO(cUPC), State of Massachusetts , City of Los Angeles
- Code compliance: UPC, IPC, NSPC, NPC Canada, and others
- Legislative Compliance: California AB715, CALGreen Title 24, California Energy Commission Standards
- ADA compliant